HOW TO DRAW

DRAWING and **SKETCHING OBJECTS** and
ENVIRONMENTS from **YOUR IMAGINATION**

by **Scott Robertson** with **Thomas Bertling**

designstudio PRESS

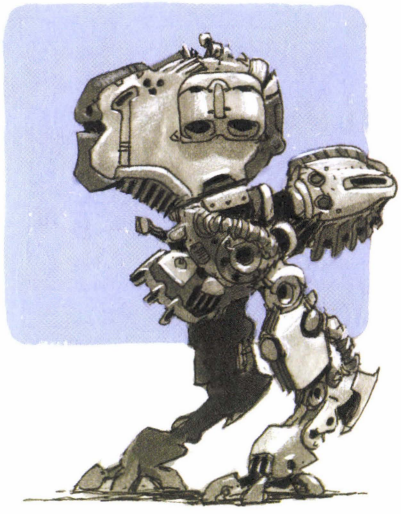

DEDICATION

This book is for those with a passion for drawing and learning.

Never stop!

BEYOND THIS BOOK:

Step-by-step videos are an integral part of the *How To Draw* educational experience! Use a smartphone or tablet to open a QR Reader app and scan this QR code. It links to the Design Studio Press image-recognition app needed to play the videos. Download the DSP app, scan Scott's photograph from page 008 and an introductory video will load.

All of the pages in this book that link to educational videos have a "play button" at the bottom, like this:

No smartphone or tablet? No worries.
Go to page 206, type in the URL on any computer to gain access to the entire links list.

Copyright © 2013 Design Studio Press. All Rights Reserved.

All text and artwork in this book are copyright © 2013 Scott Robertson, Thomas Bertling unless done by one of their former students or as noted throughout the book. No parts of this book may be reproduced or transmitted in any form or by any means, electronic or mechanical, including photocopying, xerography, and videography recording without written permission from the publisher, Design Studio Press.

Copy Editors: Melissa Kent, Erika G. Bertling, Heather K. Dennis, Jessica Hoffmann | **Graphic Design:** Cecilia Zo

Published by Design Studio Press
Address: 8577 Higuera Street, Culver City, CA 90232 | **Website:** www.designstudiopress.com | **E-mail:** info@designstudiopress.com

Printed in China | First Edition, November 2013

10 9 8 7 6 5 4 3 2 1

Library of Congress Control Number: 2013943344 | **Hardcover ISBN-13:** 978-193349273-5 | **Paperback ISBN-13:** 978-193349259-9

INTRODUCTION | PAGE 008

CHAPTER 01 Drawing Materials and Skills | PAGE 010

012 Choosing Your Drawing Materials
013 Choosing Pens and Paper
014 The Craft of Drawing
015 Practicing Freehand Straight Lines
016 X-Y-Z Coordinate System
017 Practicing Freehand Smooth Curves
018 Practicing Freehand Ellipses
019 Drawing an Ellipse on the Minor Axis

CHAPTER 02 Perspective Terminology | PAGE 020

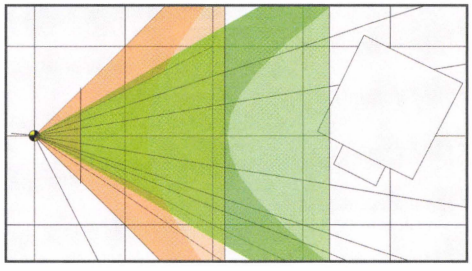

022 Defining the Perspective by the Viewing Position
023 Cone of Vision - COV
024 Finding Vanishing Points on the Picture Plane
026 Physical Parallel Lines Converge to a Common Vanishing Point
027 Horizon Line Relative to Position

CHAPTER 03 Perspective Drawing Techniques | PAGE 028

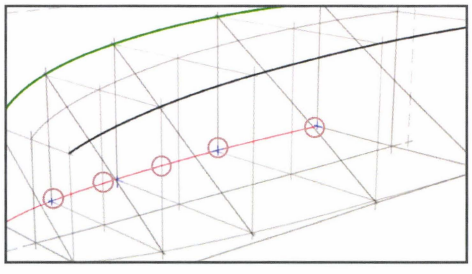

030 Division and Multiplication of Dimensions in Perspective
032 Multiplying and Dividing Rectangles
033 Dividing into Odd-Numbered Proportions
034 Mirroring in Perspective
036 Mirroring Tilted Planes
037 Mirroring Rotated, Tilted Planes
040 Mirroring 2D Curves
042 Mirroring a 2D Curve on a Tilted Surface
043 Mirroring 3D Curves in Perspective: The 2-Curve Combo

CHAPTER 04 Creating Grids | PAGE 044

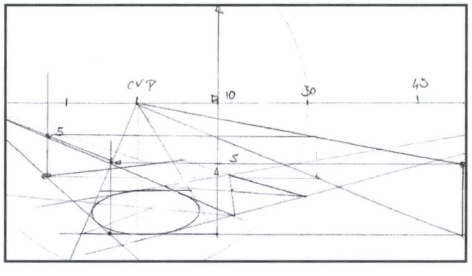

046 Perspective Grid Types
048 Perspective Grid Construction
049 Diagonal Vanishing Point, Station Point Method
050 2-Point Grid Construction with Vanishing Points on the Page
051 Rotated 2-Point Grids with Same-Sized Squares
053 Transferring Scale in Perspective
054 The Brewer Method: Constructing a Grid with Vanishing Points off the Page
057 Creating a Grid of Squares, without Diagonal Vanishing Points
058 When to Use a Computer-Generated Underlay
061 Other Benefits and Ways to Use an Underlay
062 Not All Perspective Grids Are Created Equal
068 Assembly and Exploded Views

CHAPTER **05 Ellipses and Rotations** | **PAGE 070**

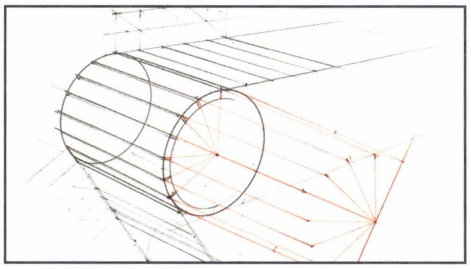

072 Ellipse Basics and Terminology
073 Placing a Circle in Perspective or Drawing Ellipses
074 Creating a Cube Using Ellipses
074 Offsetting Ellipses
075 Hinging and Rotating Flaps and Doors
076 Subdividing Ellipses
078 Shortcuts to Dividing Ellipses
079 Placing a Circle on a Sloped Surface

CHAPTER **06 Working with Volume** | **PAGE 080**

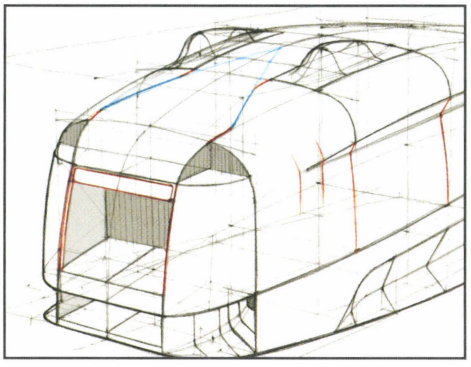

082 Planning Before Perspective
084 Orthographic Views, a.k.a. Orthogonal Views or Draft Views
085 Transferring a Side View into Perspective
086 Putting It All Together: X-Y-Z Section Drawing
088 Extending the Sections
089 2-Curve Combo
090 Cutting Volumes
092 Adding Radii and Fillets
093 Wrapping Graphics
094 Detailing and Sculpting Surfaces
096 More Tips for Modifying Complex Volumes
100 Contour Lines, Overlapping and Line Weight
102 X-Y-Z Section Drawing Applied

CHAPTER **07 Drawing Environments** | **PAGE 104**

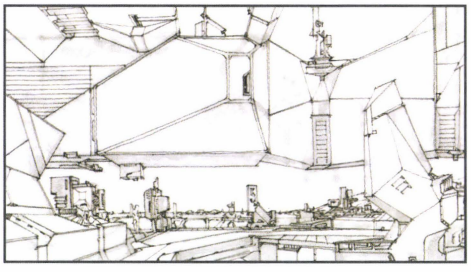

108 Photo Underlay
110 Site Planning
112 Thumbnail Sketching
115 Non-Photo Blue, Then Ink
116 Sci-Fi Environment Step-by-Step
118 Warp That Grid with a Wide-Angle Lens!
120 Outdoor Environment Sketch Step-by-Step

CHAPTER **08 Drawing Aircraft** | **PAGE 122**

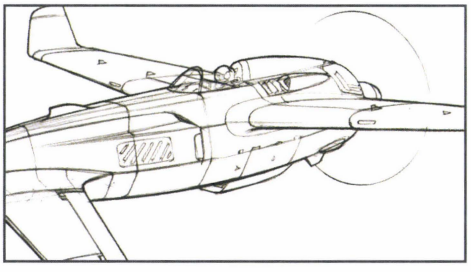

124 Airplane Anatomy
126 Visual Research
128 Drawing from Observation
130 Loose Concept Sketching
132 "Paper Plane" Ideation
133 "Paper Plane" Perspective Grid
137 Drawing a Paper Plane, Step-by-Step
142 Using a 3D Underlay
146 Final Airplane Drawing Step-by-Step

CHAPTER **09 Drawing Wheeled Vehicles** | **PAGE 152**

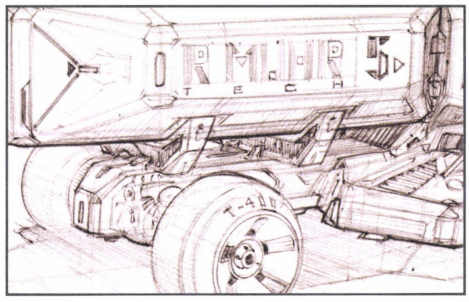

154 Visual Research
157 Have an Idea or a Goal Before Starting to Sketch
160 Some Basics on Vehicle Packaging and Architecture
164 Flexing Your Creativity
166 Grids, Grids, Grids!
169 Drawing a Side View in Perspective
170 Drawing a Stylized Side View in Perspective
174 Basic Body Sculpting
175 Drawing the Windshield and Greenhouse
176 Wheel Wells, Wheels and Tires in Perspective
178 Common Automotive Lines
180 Car Drawing Construction, Step-by-Step Grid
186 Vehicle Sketching with a Wide-Angle Lens

CHAPTER **10 Sketching Styles and Mediums** | **PAGE 188**

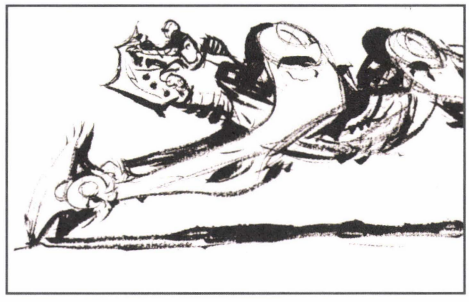

190 Ballpoint Pen
191 Copic Marker + Ballpoint Pen
192 Graphite Pencil
193 Colored Pencil
194 Pilot HI-TEC Pen on Newsprint
195 Copic Marker + Pilot HI-TEC Pen
196 Non-Photo Blue Colored Pencil + Marker + Brush Pen
197 Pentel Pocket Brush Pen
198 Copic Marker + Pen + Gouache
199 Gouache on Illustration Board
200 Toned Paper + Mixed Media
201 Digital: Sketchbook PRO

Glossary | **PAGE 202**

Index | **PAGE 203**

Additional Resources | **PAGE 204**

Video Links | **PAGE 206**

Bios | **PAGE 207**

Special Thanks | **PAGE 208**

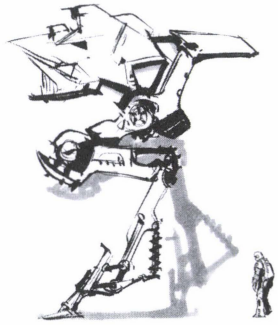

INTRODUCTION

Drawing is almost a magical power. It enables you to communicate in a different way than spoken or written language. Perspective drawing lets you convey how things work and how they look. You can inspire others with something as simple as a pen and a napkin!

When I created Design Studio Press, this is the first book I ever intended to write. Well DSP turned 10 years old this past March. With 55 other books already in print, so much for Plan A! Finally, with the help of my good friend and longtime co-teacher, Thomas Bertling, I bring you the drawing know-how I've taught for over 18 years in my own workshops and at Art Center College of Design.

Organizing this book was like a sport where you train for years in order to compete at a high level for a few seconds. We combed through over a decade-and-a-half of demos and lectures to formulate the pages we now present to you.

Once you master these manageable perspective-drawing exercises, you will have the knowledge to sketch anything from your imagination, to think like a designer and draw things the world has never seen!

Books are great for looking at beautifully printed reproductions of original drawings and reading about the thoughts and methods behind those drawings, but video might be even better for step-by-step demonstrations. For that reason, many pages of this book link to online tutorials. Check out page 004 for a full explanation of how to use the Design Studio Press app.

Almost all of us drew when we were kids and some of us never stopped. While it takes practice to master the techniques in this book, it's worth the effort. Humans have been drawing for over 40,000 years so you're about to acquire one of the oldest forms of communication. Jump in and do the basic exercises at the beginning of this book with passion. As you master these ancient skills, pass along the knowledge and teach others the wonders of perspective drawing from their imagination.

Let's draw!

Scott Robertson.

May 31, 2013
Los Angeles, California

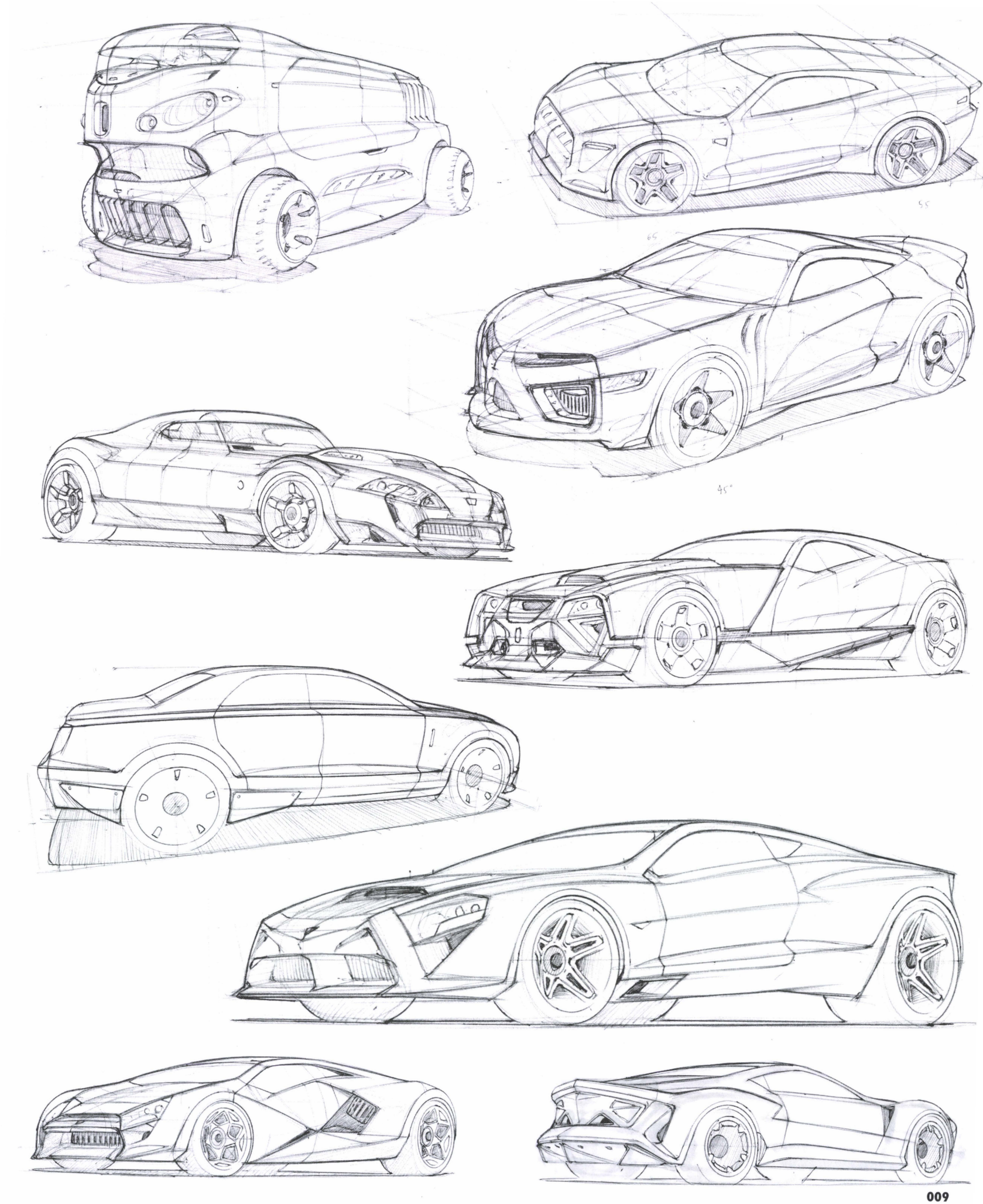

BALL-POINT PEN
Bold, Bright Colors And Easy-To-Use Features

CHAPTER 01

DRAWING MATERIALS AND SKILLS

In this chapter you will learn about all the basic tools needed to get started with drawing. There are two categories: materials and skills.

It is important to know how to pick the right materials for the job at hand. As the topic and intent of the sketch changes, so will the materials needed. Quick loose sketches require a good flow of ink to paper and sometimes strokes should be very light to find "happy accidents" in the drawing. Tight drawings need a lot of attention. Optimally, one pen is used to generate varying thicknesses of lines. To achieve the best workflow, match different kinds of paper to different pens. When you find your favorite pen, make sure to buy several! Sometimes that beloved pen goes out of production way too fast.

Building up mechanical drawing skills is an important factor in creating great drawings. It might seem simple, to draw a straight line, ellipse or curve. But these skills must become ingrained in muscle memory so that concentration can be spent on construction versus thinking about how to create the lines in the construction. Also, these skills will help create clean drawings that can be done quickly and passed along the production line easily. Not having to use multiple tools will also speed up the drawing process.

Building muscle memory takes time and practice, so be patient! Take on the exercises one at a time, and soon your skills will improve.

CHOOSING YOUR DRAWING MATERIALS

In the beginning, a lot of money does not need to be spent on materials. All that is really needed are pens, paper and a few basic tools. Brand names don't matter much, so let's get into the criteria for choosing materials.

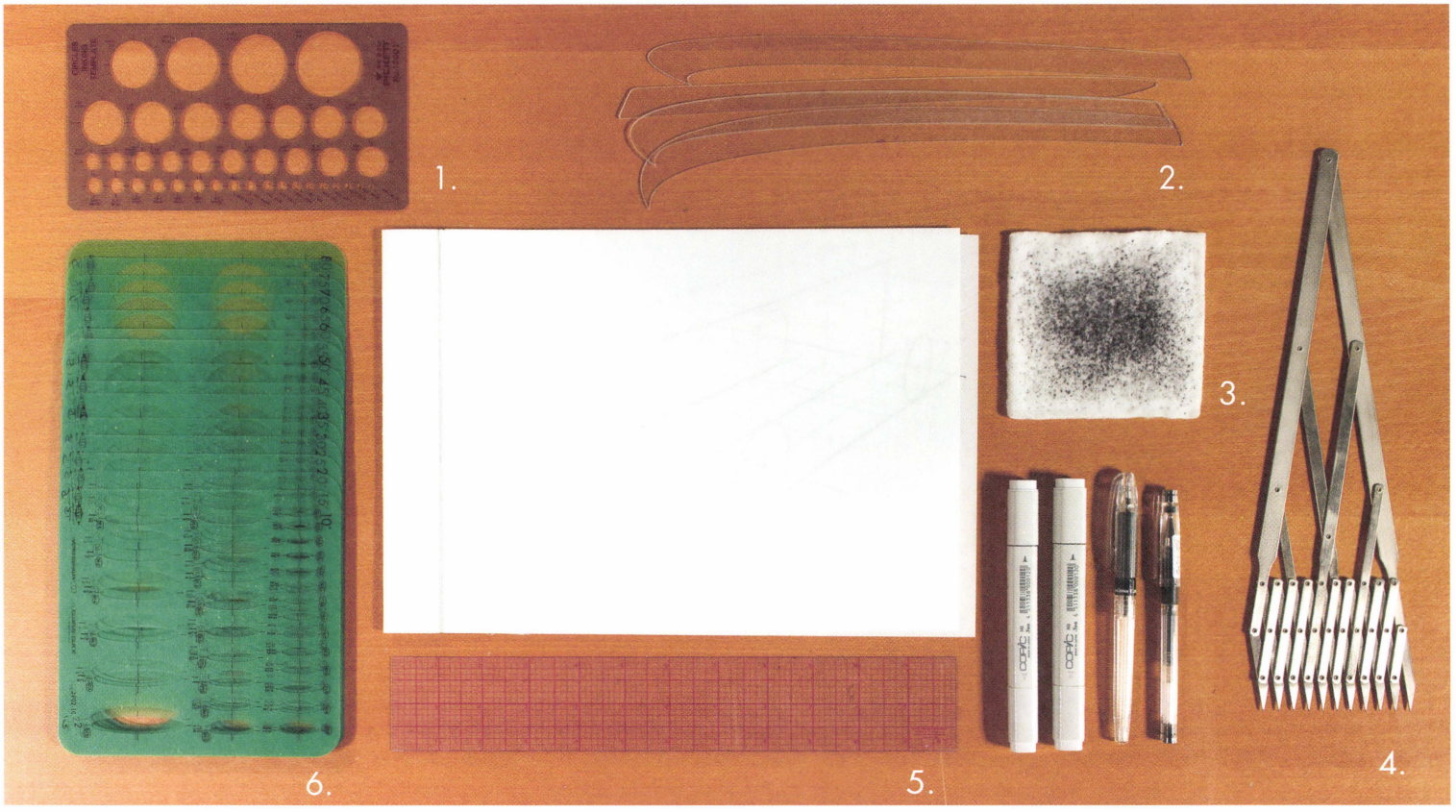

Basic tools

1. Circle template
A circle template is quite useful to clean up circles, especially in side views. A compass is nice to have, but the circle template is faster to use.

2. Sweeps
The sweeps pictured above contain the most commonly sketched automotive curves. But don't rely on them to dictate your design. Always draw your lines freehand and then use the sweeps to clean them up.

3. Cotton pad, paper towel or tissue
To avoid ink globs on the page, dab the ballpoint pen frequently.

4. Equal spacing divider
An equal spacing divider is a super-handy tool that divides any distance into even segments.

5. Straightedge
Use a straightedge to construct grids for underlays.

6. Ellipse template set
Use ellipse templates to clean up ellipses. Alvin or Pickett are recommended brands since they work for most situations. A good set of ellipse guides is an investment, but worthwhile because it will last decades.

CHOOSING PENS AND PAPER

Match the pen to the paper in order to create drawings with different line weights. Ideally, you want to be able to draw both construction lines and contour lines without switching your drawing tool.

Pens

Ballpoint pens
When choosing a ballpoint pen, test it on the paper that you plan to use most frequently to see how much ink builds up on the tip as multiple lines are sketched. A pen that can sketch at least 10 lines without forming an ink glob on the tip is best.

No erasing!
Being able to erase is not an advantage in this style of drawing. There are so many intersecting construction lines that it is nearly impossible to erase anything without disrupting these valuable shortcuts that help to explain your drawing. Plus, erasing slows down the drawing process a lot.

So what can be done when erasing is not possible? Draw lightly. It's as simple as that. Sure, some lines might be incorrect, but you can clean up the drawing later with an overlay.

Pads

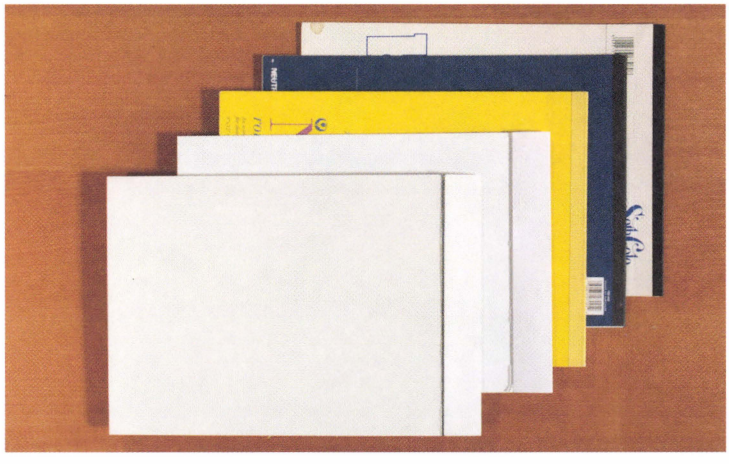

Refer to the last chapter of this book, page 188, for examples of combinations of materials used for various types of drawings. Choose a paper that works well with your preferred drawing tool. A rougher paper will be able to produce both thin and thick lines with faster flowing ballpoint pens.

Types of paper
Try many combinations of pens and paper until a favorite is found. Anything from cheap copier paper to specialty papers will work. There are a couple of specialty papers that work well with markers as well as pens. Be aware that there are two sides to these papers: one side is waxed and the other is raw. Always draw on the raw side. The waxed side is there to prevent markers from bleeding through to the next page and it's terrible to draw on with markers.

Paper

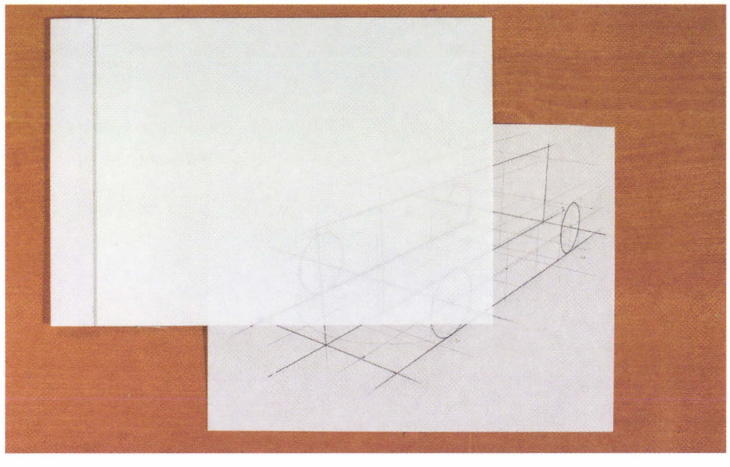

Softness of the Drawing Surface
This is not referring to the paper itself, but how it is used. Drawing on a soft surface enables the best line quality. Do not work on a hard surface with a single piece of paper! Have at least 15 pages under a drawing to get the best line quality possible.

Working with underlays
Look for paper that is transparent enough so than an underlay can show through, but not so transparent that the table shows through when you present your drawings.

THE CRAFT OF DRAWING

Drawing requires full concentration! Initially you'll spend most of your energy on craftsmanship and construction and very little on design. The more craftsmanship and construction skills become muscle memory, the more design can become the focus. The first step in this process is to practice the basic craft of drawing lines: straight lines, controlled curves and ellipses. This book has several good exercises for practicing these skills. As skills increase, the need to practice these exercises will diminish. Let's start with some warm-up drawings.

Set up a workspace

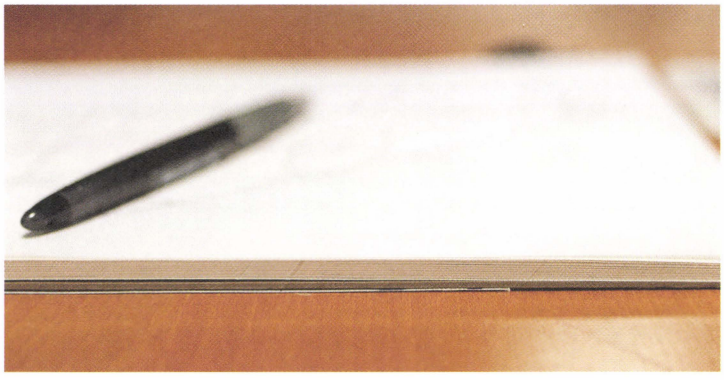

Clear the space! In order to stay focused, it's best to clear enough space and time to commit fully to the drawing. Have a clear work surface with tools at the ready. Flow will be broken when a pen or straightedge can't be found! The worst part is that the rhythm is lost for that drawing and what was clear ten minutes ago will take another ten minutes to understand again. Have a soft pad to draw on with at least 15 pieces of paper underneath the drawing for best line-weight results.

Being able to draw straight lines from point to point and in a grid is essential for all of the techniques in this book. These exercises may seem simple, but to do them well means burning through some paper to build the necessary muscle memory.

Learn to draw one straight line

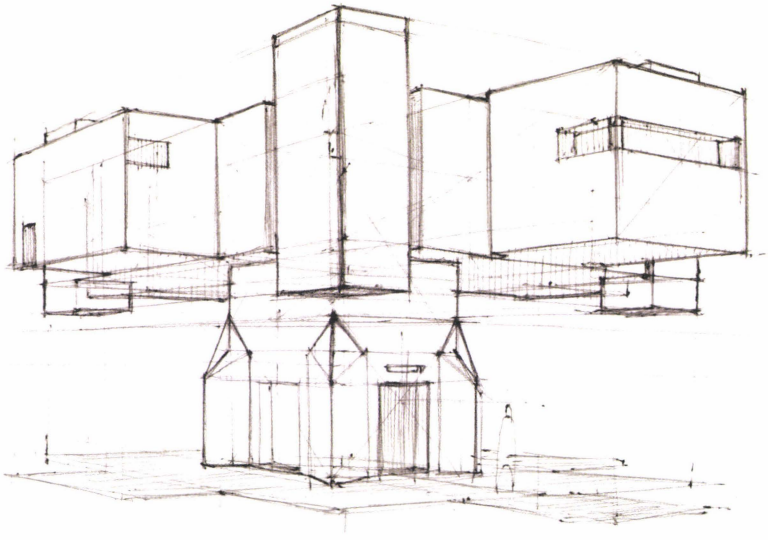

Let's look at the body mechanics that are necessary to achieve a consistently straight line. You only need to learn how to draw *one straight line*. After that *rotate the paper* to change the line direction. Without this technique, keeping the paper in a fixed position would lead to having to learn how to draw an infinite number of straight lines.

Draw with the whole arm! For long lines, use the elbow and shoulder joints; it's almost impossible to achieve this by only using the wrist.

Draw slowly! Lines need to be repeatable and controlled. Draw each line once and do not trace the same line over and over again.

Ghost the line! Go through the movement with the pen hovering above the paper. When the correct orientation is found, drop the pen on the paper and draw.

Is the line arching?

1. Muscle memory might have to be rewired when a line that feels straight while drawing results in an arch (red line).
2. The best way to counterbalance is to draw a line that feels like the opposite arch (green line).
3. After some practice the feeling of drawing a straight line and the result will match up (blue line).

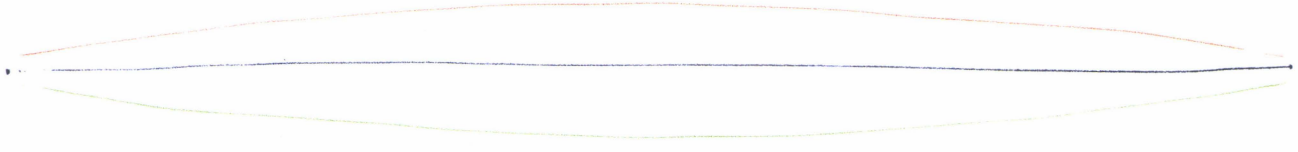

Drawing parallel lines

Start off with shorter lines, something in the 3-inch range, and work up to the full length of the paper. Make sure to engage the entire arm and that lines are drawn consciously; they should be repeatable at the same length and spacing. Draw lightly. These are the fundamentals for drawing construction lines.

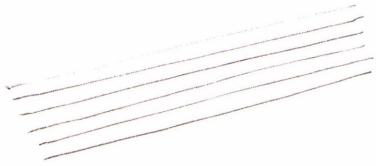

Aiming lines point to point

Below are two ways of practicing. First, draw a couple of points on the page and connect them. Remember to rotate the paper to orient one straight line that the body knows how to draw. It's fine to overshoot the points slightly to improve flow.

The second exercise is to draw lines that meet in one point. Start to draw at any point outside of the center, draw a line through the center, and continue.

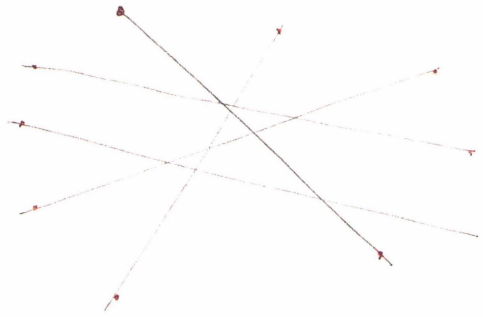

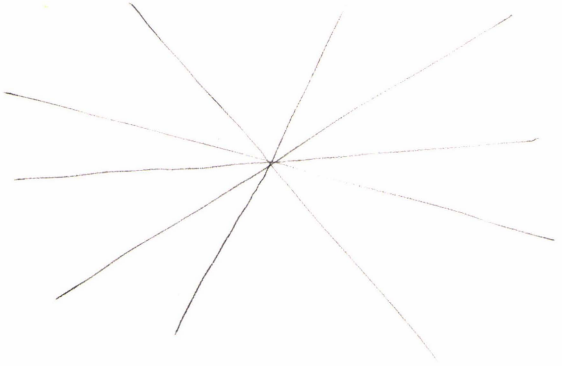

Drawing boxes in perspective

A fun way to practice drawing straight lines is to draw boxes in 1-point perspective. Draw a Horizon Line (HL) and choose a Vanishing Point (VP). Draw a rectangle and connect each corner to the VP. Draw another rectangle in the distance between these lines and you have a box!

Draw through, which means to draw even the edges that would not be seen, because they are behind the box. Draw the complete box with light construction lines, then darken the inside edges and the outlines of the box. The outlines should be darkest. Trace lines again and again to achieve different line weights.

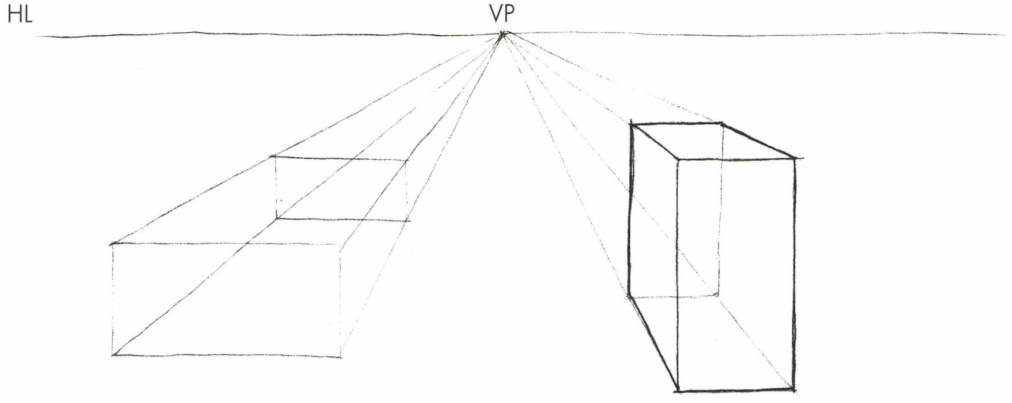

X-Y-Z COORDINATE SYSTEM

Sketching in perspective requires understanding the X-Y-Z coordinate system. Each axis points toward a Vanishing Point. Each plane is perpendicular to its axis. Stay in control of your drawing by always knowing on which plane you are sketching. This system is used not only to sketch boxes, but for all complex forms.

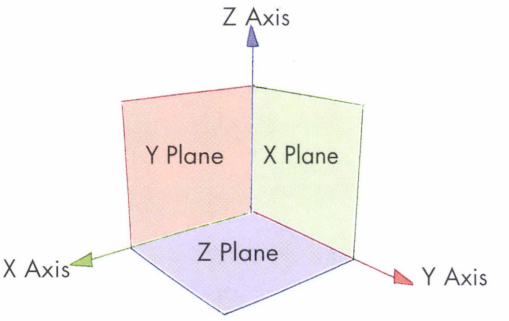

To draw a box where no side is perfectly perpendicular to the viewer, 2-point perspective is needed.

Drawing a box in 2-Point perspective

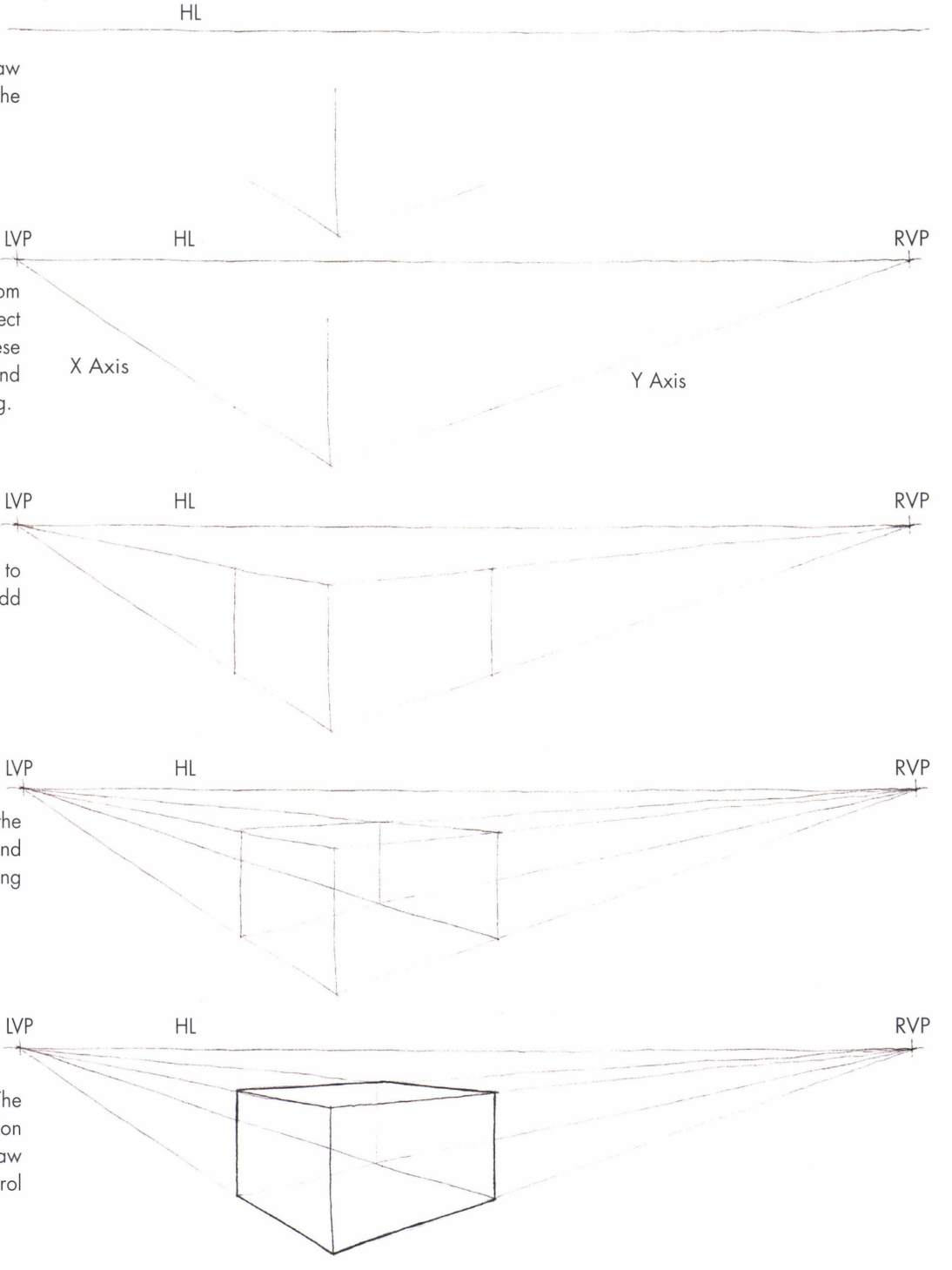

1. Draw the Horizon Line (HL). Then draw the front corner of a box. This establishes the X, Y and Z Axes.

2. Extend the X Axis and the Y Axis lines from the bottom of the vertical, until they intersect the Horizon Line. The intersections of these lines create the Left Vanishing Point (LVP) and Right Vanishing Point (RVP) for the drawing.

3. Draw lines from the top of the vertical, to the Left and Right Vanishing Points. Then add two verticals at any distance.

4. Close the box by drawing lines from the top of the two new verticals to the Left and Right Vanishing Points. Add the resulting hidden vertical in the back.

5. Darken the visible edges of the box. The drawing still shows the light construction lines. This is what it means to "draw through," which is very helpful to control your drawings.

PRACTICING FREEHAND SMOOTH CURVES

Drawing requires not only straight lines, but curves too. There is a skill to drawing smooth, accelerating curves. When working in side view you determine how the curves flow; in perspective, the construction dictates how the curves flow and it can sometimes be surprising how radically some curves move in perspective.

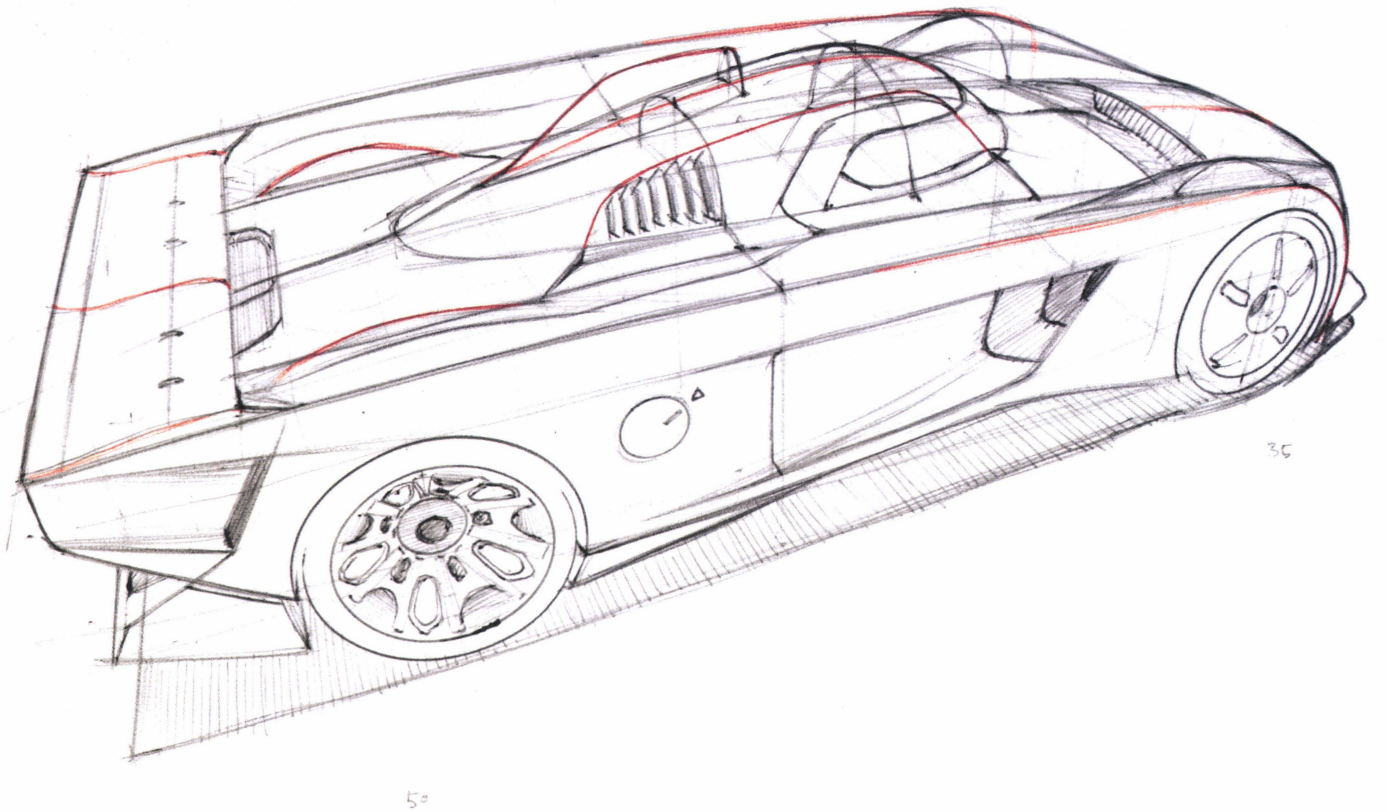

Drawing curves through multiple points

Practice drawing accelerating curves through multiple pre-existing points. A smooth, graceful curve is optimal. This is done best by drawing the curve in segments, using the guide points as waypoints, not end points. Otherwise, the segments will have to be re-drawn multiple times and that causes fuzzy/hairy lines. Keep practicing curves to prevent this from happening.

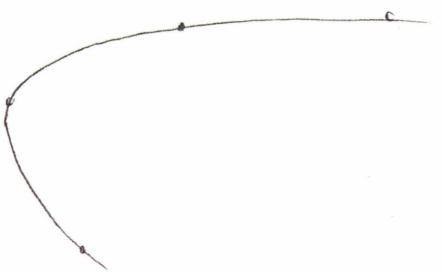

DO
Place points that follow your intended design, then create a smooth curve through those points. Rotate the page while drawing and use the natural curves your wrist and fingers draw. It's fine to draw the curve in segments; it's not necessary to draw it as one continuous line.

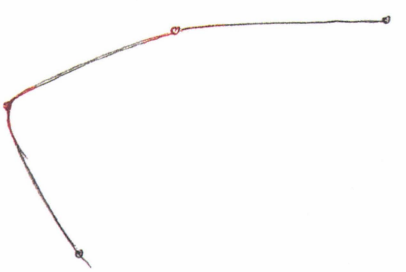

DO NOT
Create a curve with edges and corners. Avoid this by seeing the points as waypoints rather than endpoints.

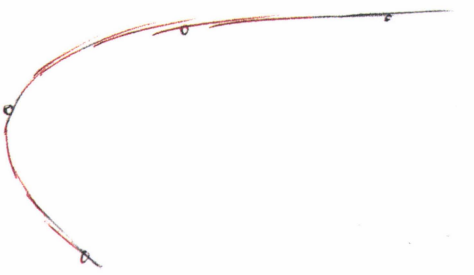

DO NOT
Create a fuzzy line. Stay focused and methodical. Control the line as much as possible so that the task can be repeated over and over at a high quality.

PRACTICING FREEHAND ELLIPSES

Ellipses occur frequently. They are essentially circles in perspective, and some obvious ellipses are wheels and gauges. But they are also needed in constructions to rotate doors and objects. To become comfortable placing ellipses, start by drawing a controlled ellipse. In later exercises, placing a circle in perspective, which becomes an ellipse, will be explained.

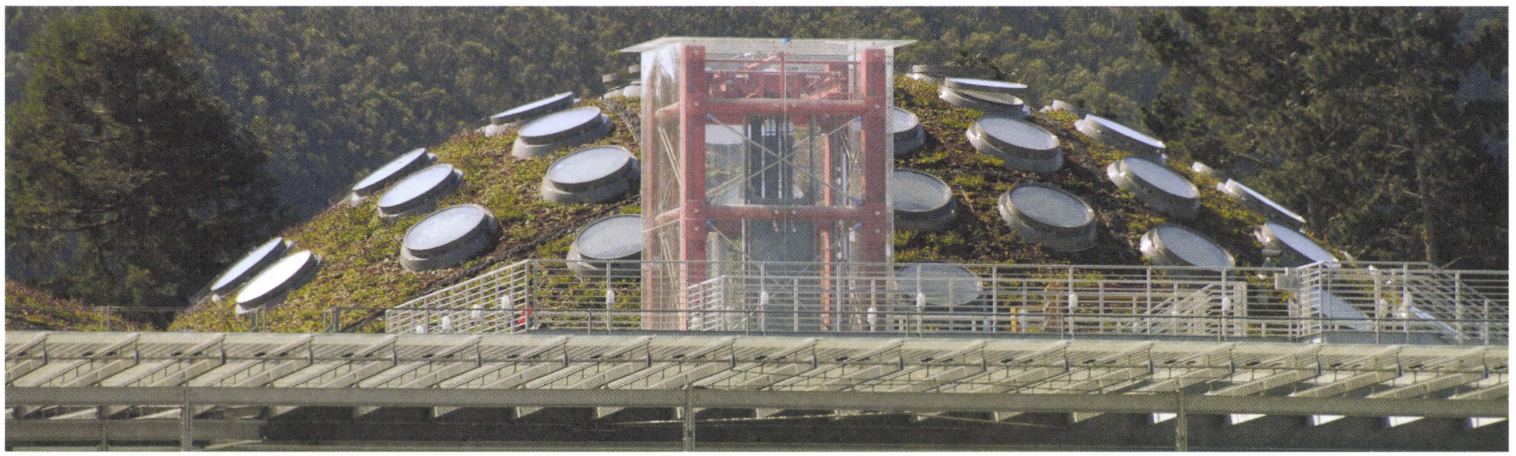

Drawing an ellipse and adding the minor axis

1. Draw a freehand ellipse. Make sure to move the whole arm.

2. Draw with a light line. Later, the drawing can be cleaned up with an ellipse guide. Do not darken the lines too much by repeating the strokes. Even if you drew an incorrect ellipse, drawing over and over it will only make it more obvious.

3. Check that the ellipse has no flat spots and is not lopsided.

4. Place the minor axis on the ellipse. The minor axis is the line that divides it in half across the narrow dimension of the ellipse making each half equal to the other. The minor axis plays an important role in placing the ellipse in perspective, so finding and controlling it is essential.

5. Double-check with an ellipse guide or fold the paper along the minor axis and check that the two halves line up on top of each other by holding the paper up to the light.

Good line weight

Too dark and too many lines

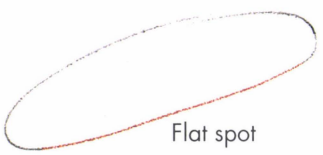

Flat spot

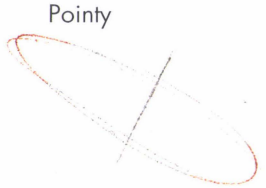

Pointy

Round

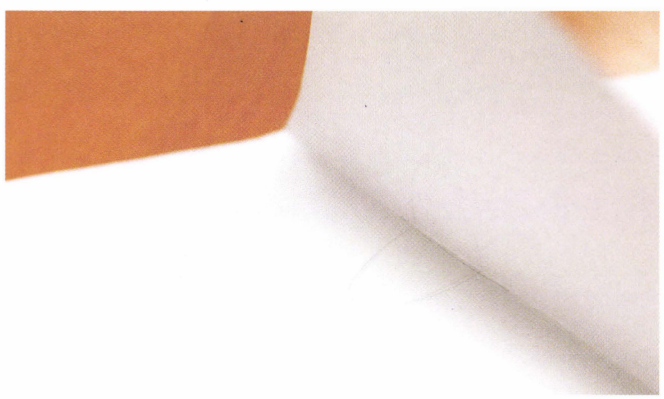

Fold ellipse along minor axis on top of itself.

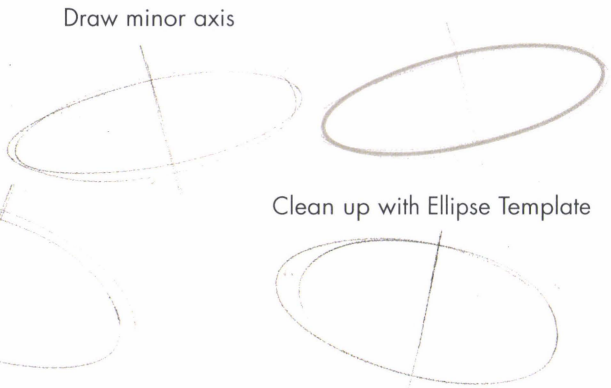

Draw minor axis

Clean up with Ellipse Template

DRAWING AN ELLIPSE ON THE MINOR AXIS

Now switch it up. Draw the minor axis first and then place the ellipse over it. Align the hand correctly by rotating the paper to get the best angle.

Make sure that the ellipse is symmetrical. Check that it is on axis. The minor axis needs to be centered and perpendicular to the drawn ellipse.

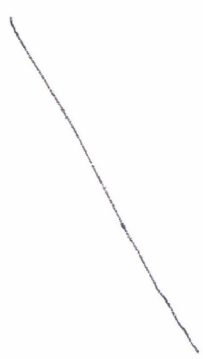

Minor axis first ...

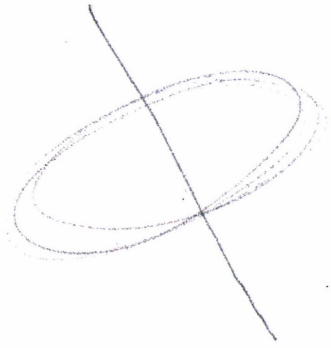

... then draw the ellipse

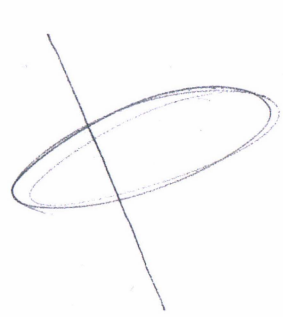

Perpendicular, but not symmetrical

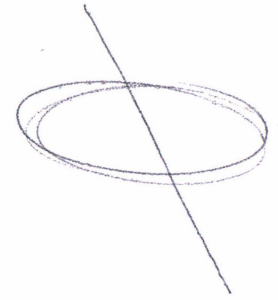

Ellipse is not perpendicular to axis

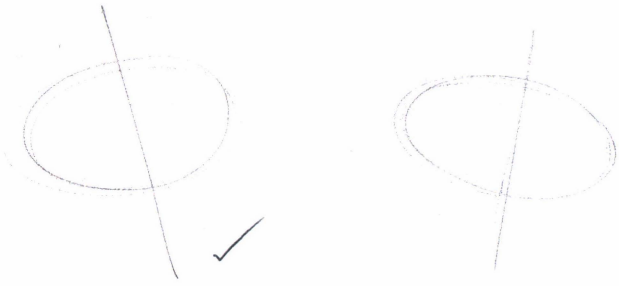

Drawing ellipses defined by the minor axis and width

Draw the minor axis, then a line to the left and the right of it. Make sure these outer lines are symmetrical or it will be impossible to draw ellipses that fit.

Place the ellipses on the minor axis and match them to the width of the two additional lines. Vary the degree (how narrow or wide they are) as well.

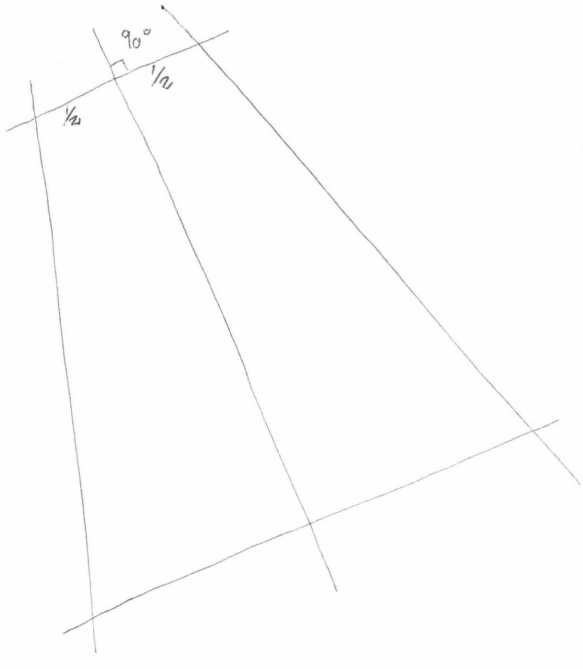

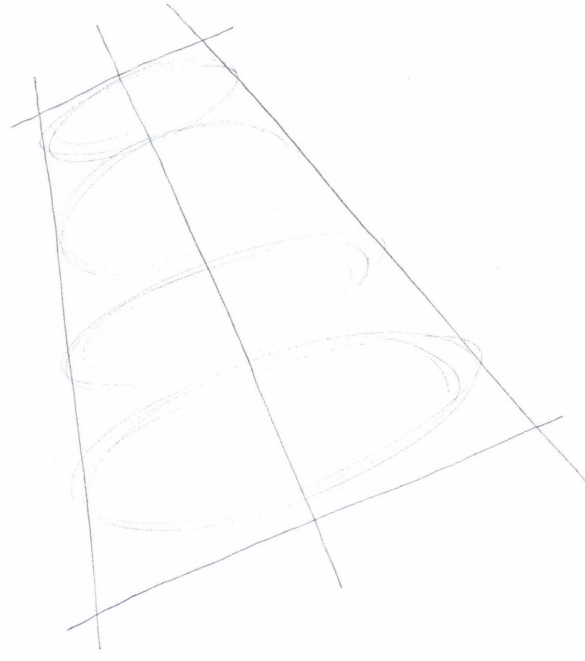

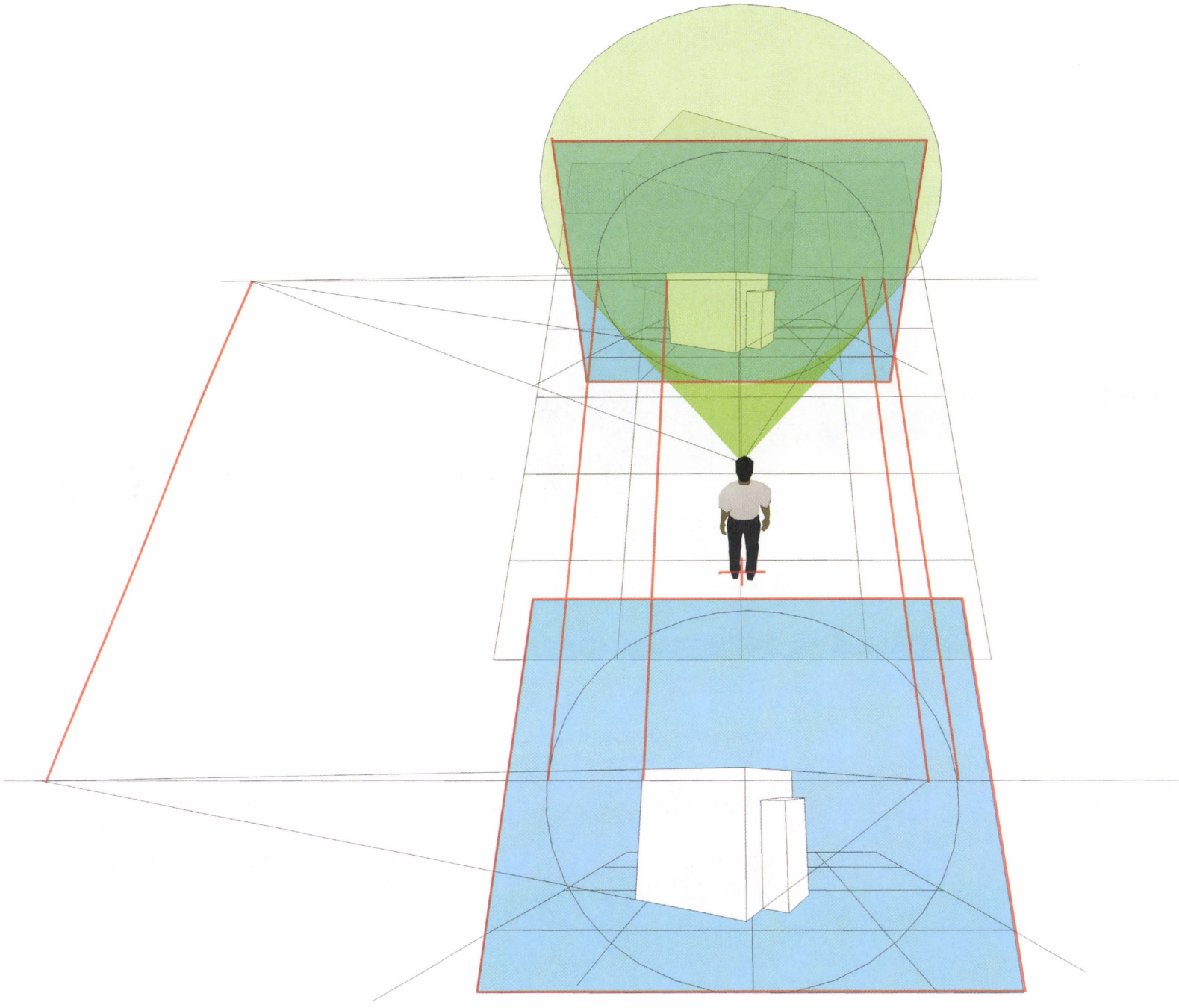

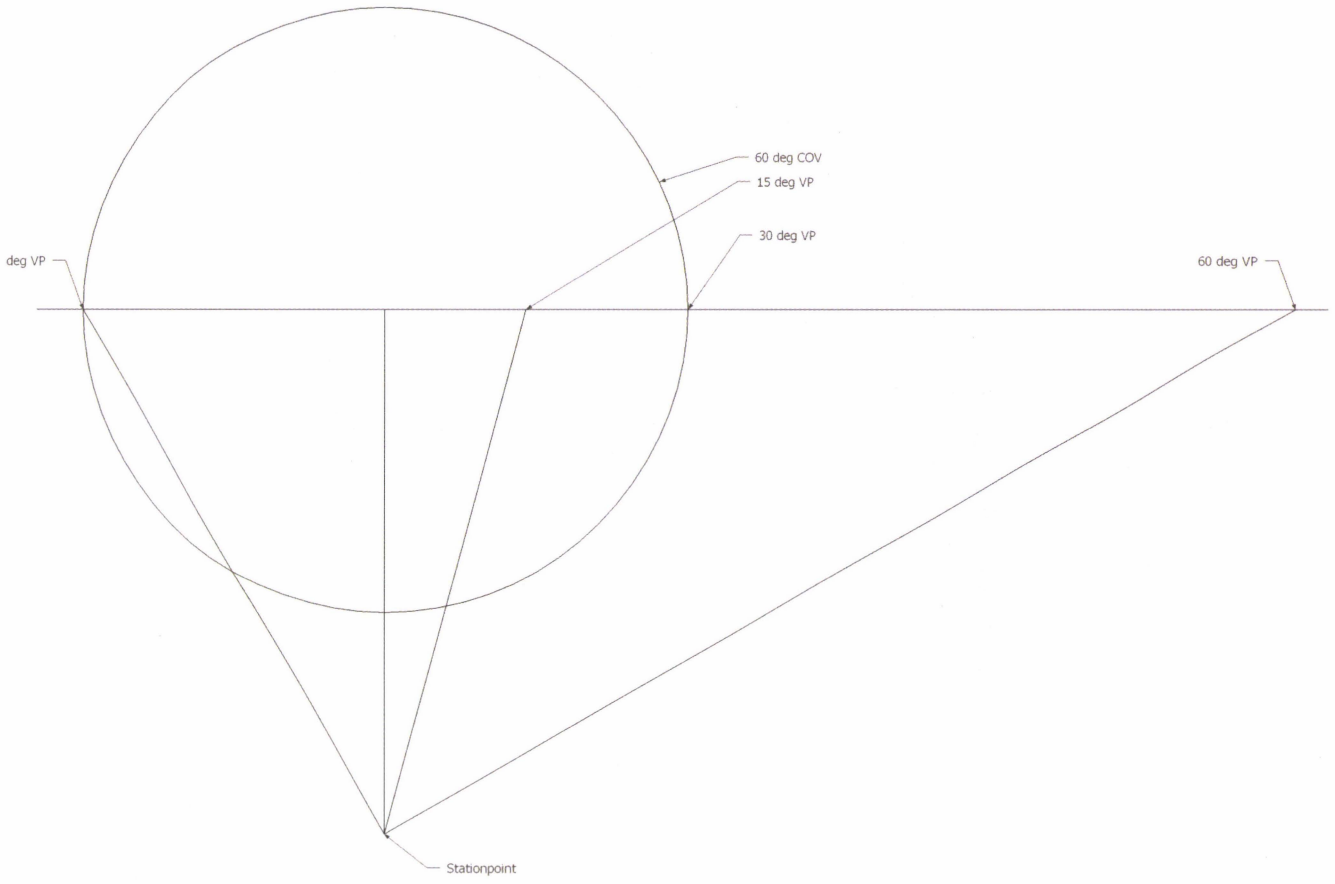

CHAPTER 02

PERSPECTIVE TERMINOLOGY

Explore this chapter to familiarize and refresh your knowledge of perspective terminology. The focus is on the terms and principles that are essential to navigate perspective drawings and to design objects and scenes from your imagination.

Remember, a true version of what is seen is not created, but rather emulated, since stereoscopic vision is not possible on paper. Humans have two eyes, which allows us to see in 3D. Drawing in perspective is a cheat, an approximation of how we see the world.

This chapter will explain the rules that exist to create the best illusion on paper. Once the rules have been mastered, it's okay to break them intentionally. However, if they are broken accidently, it can sabotage what you are trying to convey to the viewer. For example, imagine you want someone to view your fantastic landscape and house as someplace they would want to live. Instead, a nagging question comes to their mind—something is odd and they cannot figure out what it is. This question is triggered by an inaccurate perspective in your drawing and should not have happened, since the goal was to talk about the project, not perspective. This was unintentional and ended up distracting the viewer from the goal.

Knowing the fundamental rules of perspective will allow you to join the discussion and exploration of perspective knowledge. There are many books that cover this terminology in depth, and doing additional research is encouraged. Join the community and start exploring your own questions and finding answers that allow for judging work and helping others.

DEFINING THE PERSPECTIVE BY THE VIEWING POSITION

Defining the viewing position is essential to controlling the perspective drawing. Keep in mind that photography is being replicated in the drawings; therefore, it is essential to define where one is standing, the viewing direction, and the lens being used. This knowledge will apply to the guessed perspective, the constructed perspective, and even to the computer-generated perspective. The rules need to be known so it becomes obvious when they are being broken.

Defining Point of View - (POV)

1. Ground Plane

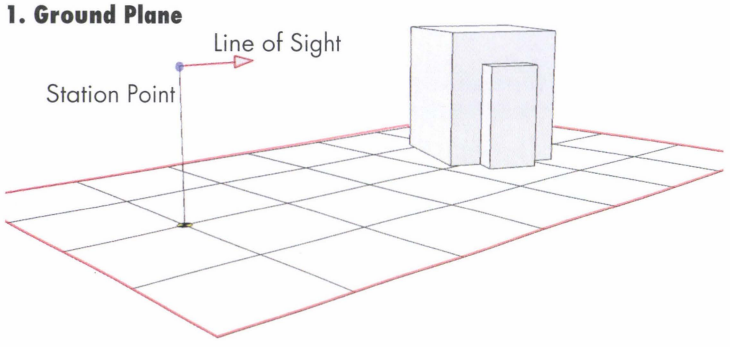

2. Picture Plane

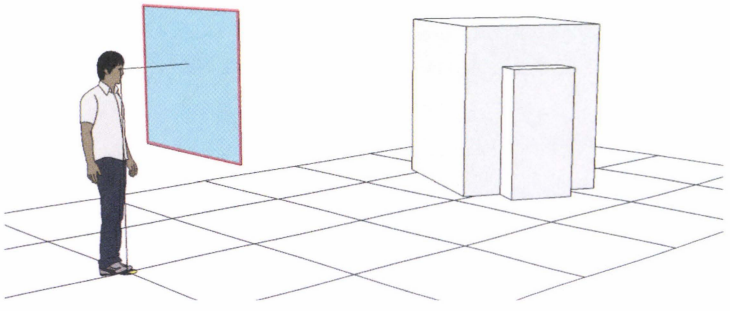

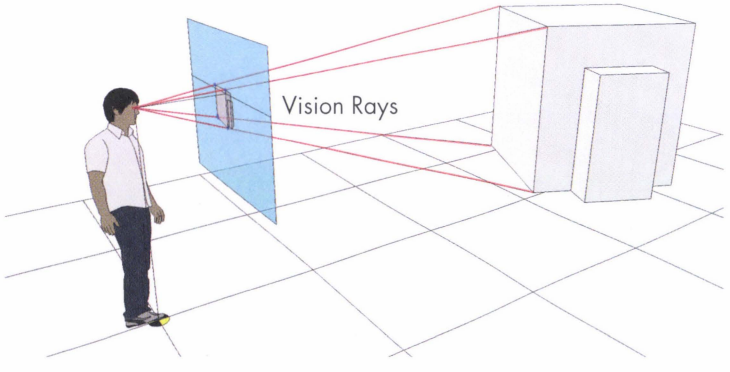

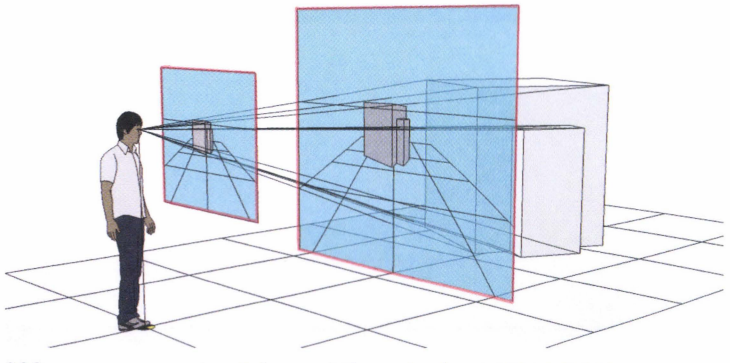

Let's look at the following situation. A great picture of a building is taken with a camera and displayed. Another person wants to take the same shot when visiting the same location. In order for this to happen, the second photographer needs to know the location, viewing direction and the lens to use. This is the same information needed to create a drawing.

1. Ground Plane
The position and direction where the photo was taken needs to be known. This could be on the street, on a bridge or on the sand at the beach. Whatever surface on which the photographer was standing or sitting is the ground plane. That's simple on Earth, but what about in outer space? In space it would still be considered as sitting or standing in a spaceship and this would determine the ground plane. What if the ship is removed from the equation? Then think of the ground plane as the extension of the soles of the feet.

Station Point - (SP)
Now that the ground plane is established, the location and height of the camera—or in the case of a drawing, the eye—needs to be disclosed. In a drawing this spot is called the Station Point. Think of the Station Point as a point in space that has no direction.

Line of Sight
The direction one is looking is the Line of Sight. The Line of Sight determines both the direction being looked and the incline.

In the graphic, the Line of Sight is parallel to the ground. This creates a 1- or 2- point perspective in which all physical vertical lines are represented by vertical lines in the drawing.

Tilting the line of sight (having it not be parallel to the ground) creates a 3-point perspective or even a 5-point perspective. For starters it is recommended to keep the Line of Sight parallel to the ground. This makes the construction considerably easier.

2. Picture Plane - (PP)
The Picture Plane is the surface on which images are recorded. Imagine the Picture Plane being a plate of glass that is pinned perpendicular to the Line of Sight.

It is time to capture the image. Close one eye and on the glass, start drawing what you see behind the plate of glass. The vision rays run from the eye to the object, passing through the picture plane. Record those transition points on the Picture Plane. This is perspective drawing.

How far is the Picture Plane from the Station Point? It doesn't matter for this construction. Pushing the Picture Plane away just creates a larger drawing, but will not change the proportions in the drawing itself. Historically, when the masters were really painting on glass, their arm length was the limiting distance factor.

1. Take a look at what was captured on the Picture Plane glass; specifically notice the squares on the ground. The squares closer to the box are less distorted than those that are closer to the viewer. The captured image is correct with a high or low amount of distortion, but the closer squares are much harder to understand. They may be squares, but they look more like long rectangles.

Coming back to the camera analogy, it's time to choose the lens. This can be anything from wide to telephoto. The particular lens determines how much of the area will be seen through the lens, which is what is included in the drawing. It's assumed here that the camera would take a square picture as defined by the square picture plane on the previous page.

2. The optimal lens that creates an acceptable amount of distortion is a 50mm lens. This translates into the drawing as a 60° Cone of Vision. How is this determined? Every lens has a degree of visible area assigned to it and 60° is close to what is seen through a 50mm lens. This cone is green in the drawings. A 90° Cone of Vision is shown in red.

3. Going back to the drawing, the Cones of Vision have been added. There are two circles. The inner circle represents the 60° Cone of Vision and the outer circle the 90° Cone of Vision. It becomes clear that the area within the 60° Cone of Vision has less distortion than the area in the 90° Cone of Vision.

Cone of Vision degrees for different perspectives
When drawing, it's best to maximize the space on the page and not draw objects that are too distorted. Here are guidelines for the Cone of Vision degrees for different perspective constructions.

1-Point Linear Perspective Cone of Vision: 50°
1-point perspective is very prone to distortions. To avoid them altogether, stay within a 50° Cone of Vision in drawings. Going even as small as 40° is acceptable. Be aware that going too small will flatten out the perspective like that of a telephoto lens.

2-Point Linear Perspective Cone of Vision: 60°
The Cone of Vision can be opened up more here. Be aware that around the edges, the distortion will increase, so it's best not to place any critical drawing elements near the edges. The 60° Cone of Vision will be the go-to Cone of Vision for most drawings.

3-Point Linear Perspective Cone of Vision: 60°
Staying within the 60° Cone of Vision is still recommended.

5-Point Curvilinear Perspective Cone of Vision: open choice
In 5-point perspective almost anything goes. Keep in mind that whatever is being drawn will be like a wide-angle-lens photograph at this point. To see examples of this jump ahead to page 047. Perspectives can be created that allow more than the natural Field of View to be perceived. When this happens be extra mindful of the construction. Make sure to double-check all lines since instinct can easily lead to a wrong direction.

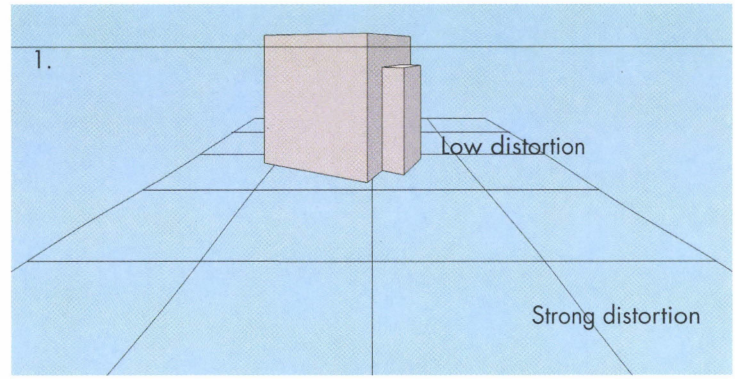

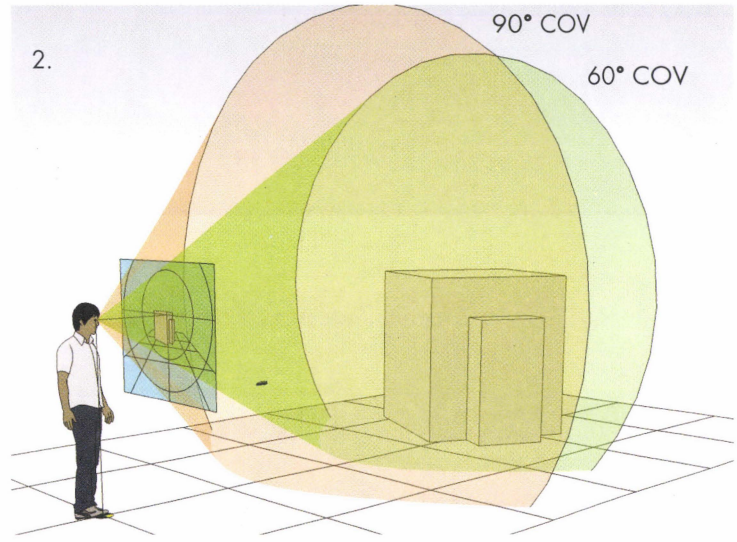

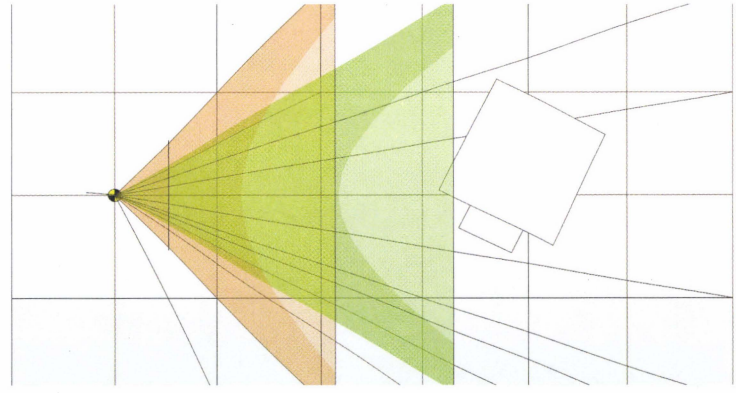

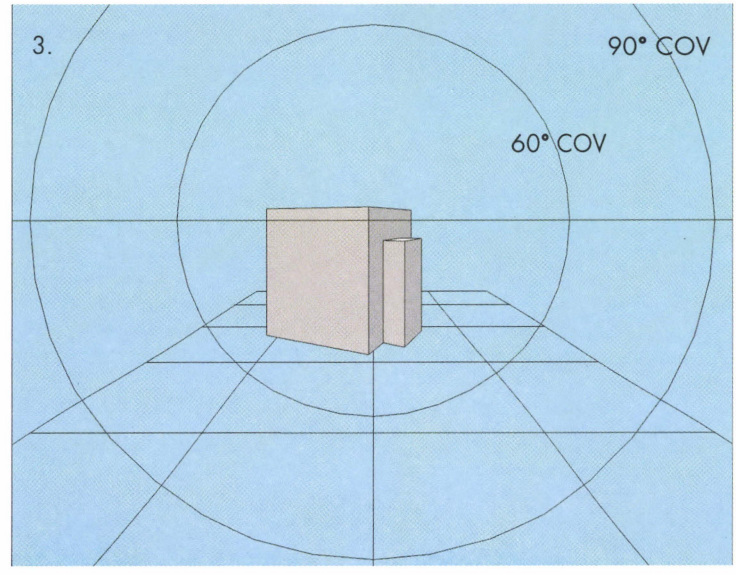

FINDING VANISHING POINTS ON THE PICTURE PLANE

Diag.1

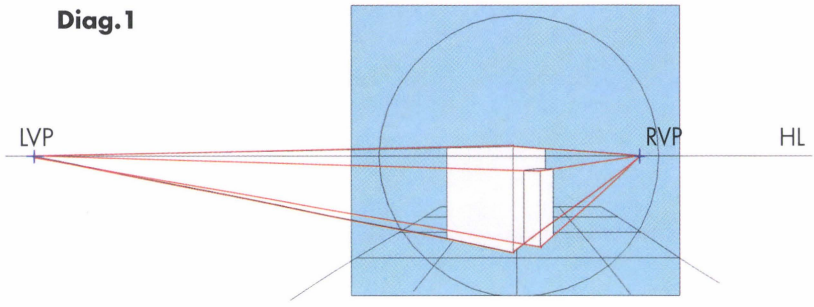

Let's emulate the "glass plate" experience on a piece of paper. Understanding where the Vanishing Points are, and how they relate to one another, makes it easier to build perspective grids.

1. When the parallel lines of the box are extended, each set converges to a Vanishing Point.

Letters used in the Drawings:

SP	Station Point
HL	Horizon Line
CVP	Center Vanishing Point
LVP	Left Vanishing Point
RVP	Right Vanishing Point
45 VP	45° Vanishing Point, and other degrees

Diag. 2

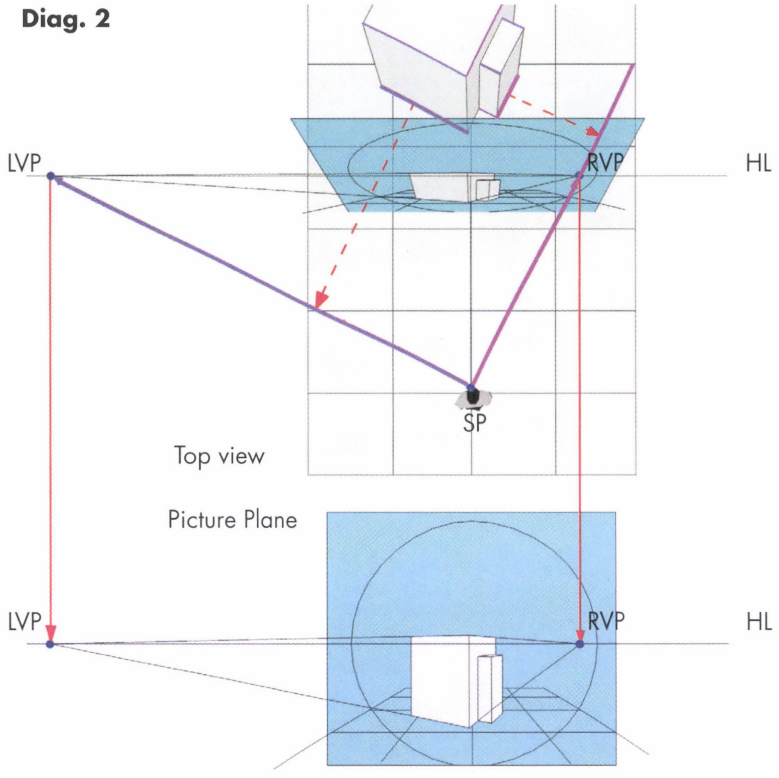

2. To find the Vanishing Point for any set of parallel lines, use the top view and move one of the lines parallel until it intersects the Station Point.

Next, find the point where that parallel line intersects the Horizon Line. This is its Vanishing Point.

3. The next step is to abstract this construction to fewer lines to be able to find any Vanishing Point in the future.

This drawing shows a combination of the top view and the Picture Plane. This is done to save space and is more efficient. It's called the Visual Ray Method for perspective drawings.

Diag. 3

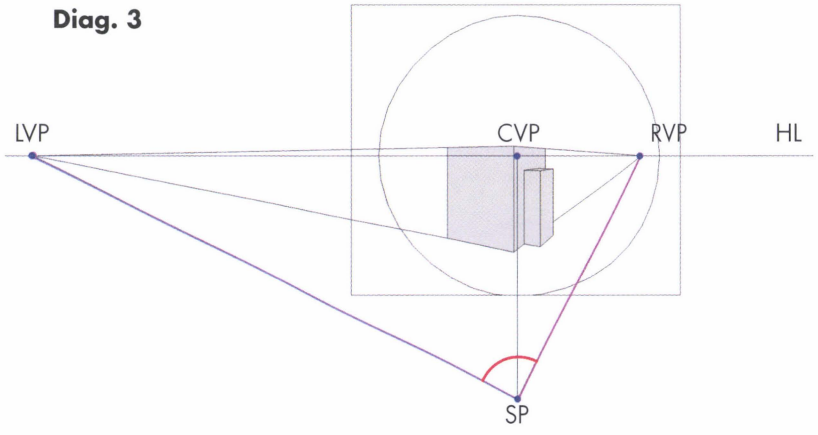

With both drawings combined, the two lines at the Station Point have a relative angle of 90°. This angle of 90° is what locates the two Vanishing Points on the Horizon Line needed for the construction of objects with 90° corners in perspective.

Going from the Station Point directly to the Horizon Line will yield a perpendicular line. The point where this line intersects with the Horizon Line is the Center Vanishing Point for this perspective construction.

4. To find a new set of 90° Vanishing Points rotate the two 90° lines together. The center of rotation is at the Station Point. Any degree of rotation can be chosen. Here the 90° lines were rotated clockwise so that both intersect with the Horizon Line while still staying on the page.

Diag. 4

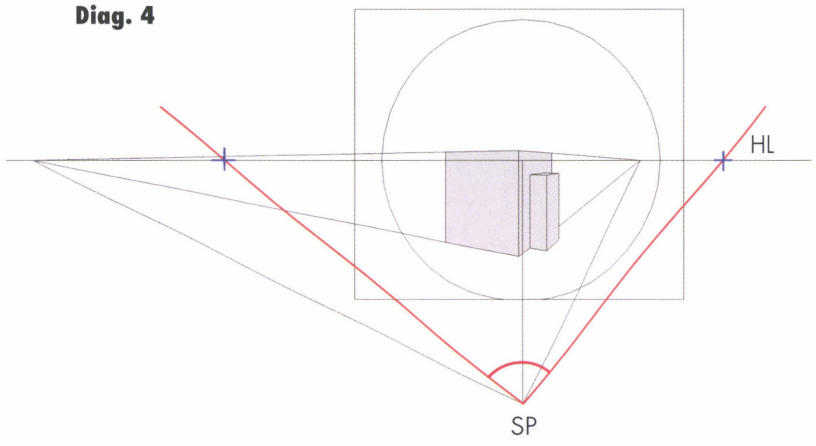

5. To place another box with 90° corners use the new set of Vanishing Points. Both boxes sit on the same ground plane and are rotated at different degrees relative to the viewer.

A common error is to cause a rotated object to look like it's floating above the ground or is tilted. This is caused by not matching the Vanishing Points to the same Cone of Vision.

Diag. 5

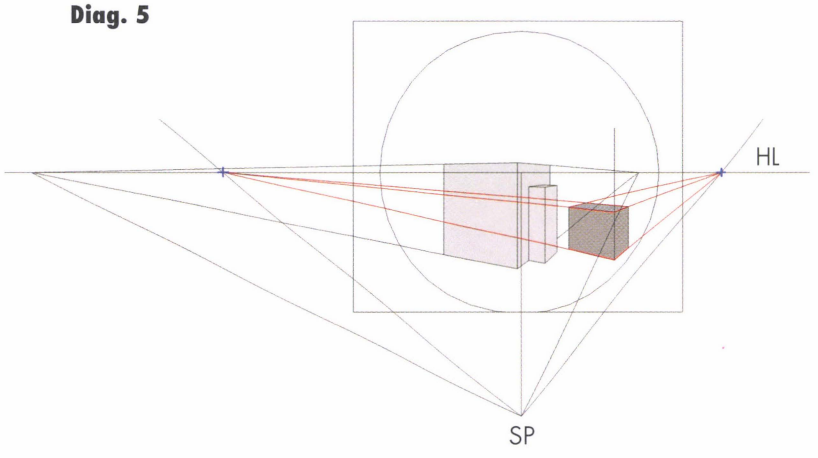

6. To find the degree of any Vanishing Point measure its deviation from the line that runs perpendicular to the Horizon Line and ends at the Station Point. To achieve a 90° box, the degrees of deviation of the Left and Right Vanishing Points will total 90°. Use them together as pairs and avoid mixing them with one another.

Diag. 6

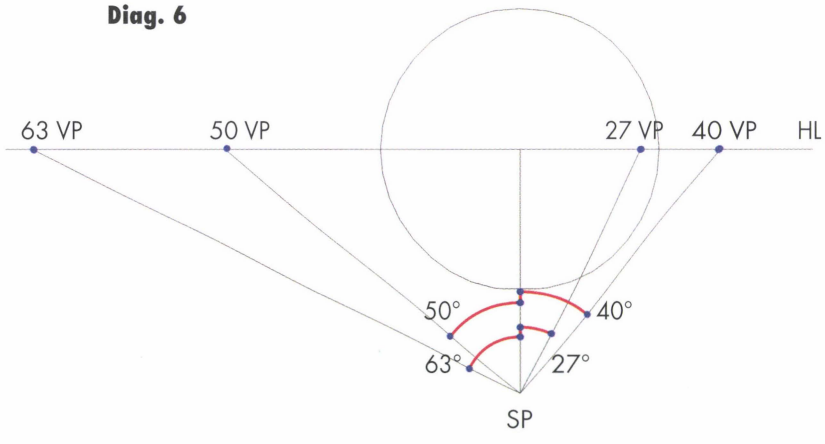

7. Up to now in this example, random Vanishing Point pairs have been found. Now it is time now to find a matching pair of VPs that are more common. Other than 1-Point Perspective, very common VP combinations are 75/15, 60/30, and 45/45. Take a second look at the 30° Vanishing Point. The edge of the 60° Cone of Vision runs through this Vanishing Point, while the center of the Cone of Vision is the Center Vanishing Point.

Diag. 7

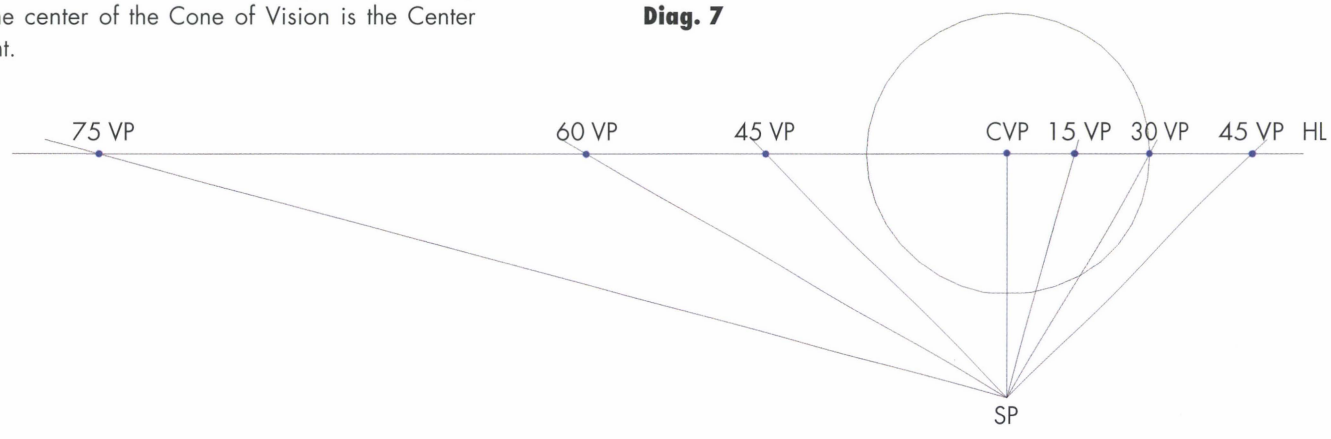

PHYSICAL PARALLEL LINES CONVERGE TO A COMMON VANISHING POINT

As a general rule, physical parallel lines converge to a common Vanishing Point, but like anything else there are exceptions! In linear constructions for 1-point and 2-point perspective these exceptions are found. This is because 1-point and 2-point perspective constructions are made more efficiently by not having all physical parallel lines converge.

1-point perspective with some non-converging lines

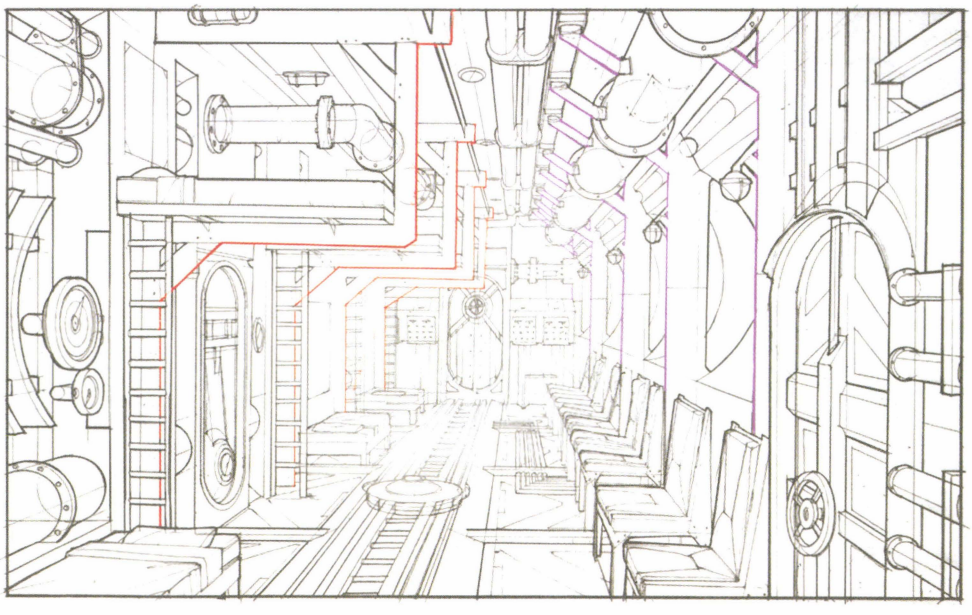

In 1-point perspective, there is only convergence into the depth of the drawing. Any lines that are parallel to the Picture Plane or perpendicular to the viewer will scale, but not converge.

In this drawing, neither the verticals nor the horizontals converge. In addition, all angled lines that are on a plane parallel to the Picture Plane do not converge either.

This makes using 1-point perspective very attractive, since it is quick to set up and use. There is only one direction of convergence and only one Vanishing Point to consider.

Drawing by: Danny Gardner
View more of Danny's nice work at:
www.dannydraws.com

2-point perspective with some non-converging lines

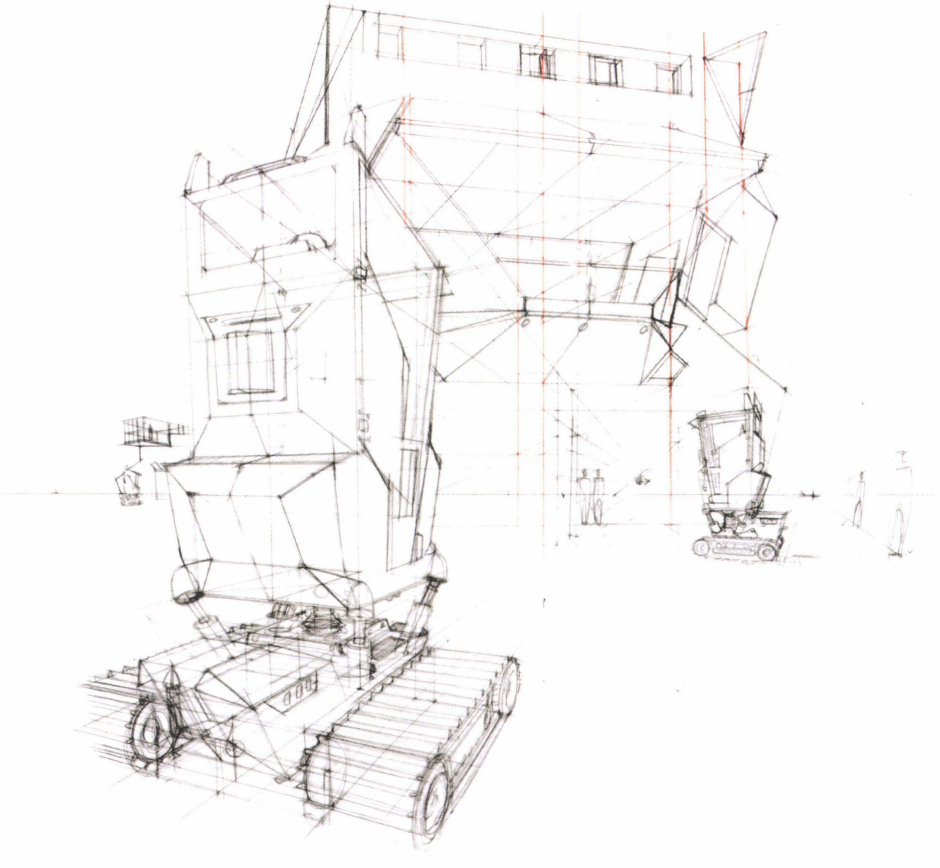

In 2-point perspective, all physical parallel lines converge except the verticals. The verticals stay vertical and do not converge.

Keeping the verticals perpendicular to the Horizon Line makes it much easier and faster to draw in 2-point perspective. The drawback is that the perspective can quickly become distorted if the 60° Cone of Vision is abandoned. A 3-point perspective is needed to draw more dynamic views looking up or down.

Standing higher or lower with the Line of Sight parallel to the ground

What happens to the Horizon Line when the Station Point is higher or lower? Let's review the set-up of these scenes. There is a side view (left) and the corresponding view of the blue Picture Plane (right). In the Cone of Vision, the Line of Sight is parallel to the ground at different heights. On the object are 3 height lines. Each of the lines corresponds with the height of the viewer's eyes.

Looking at these examples, notice that the corresponding height line is on the Horizon Line and flat, while the other height lines show convergence. Most important is that as the Station Point raises and lowers, so does the Horizon Line.

The changes shown affect how much of the object can fit into the Cone of Vision while remaining in 2-point perspective, with the verticals perpendicular to the Horizon Line.

1. Imagine standing on a large block and looking straight ahead. The corresponding height line is on the Horizon Line and level. Since the Cone of Vision moved up, less of the base of the object is seen.

2. Standing on the ground, the whole object can be seen in the Cone of Vision. The upper height line is converging, while the middle one matches with the Horizon Line.

3. Standing in a hole, the corresponding height line matches the low Station Point. Now the upper part of the object is out of the Cone of Vision, but much more of the ground in front is visible.

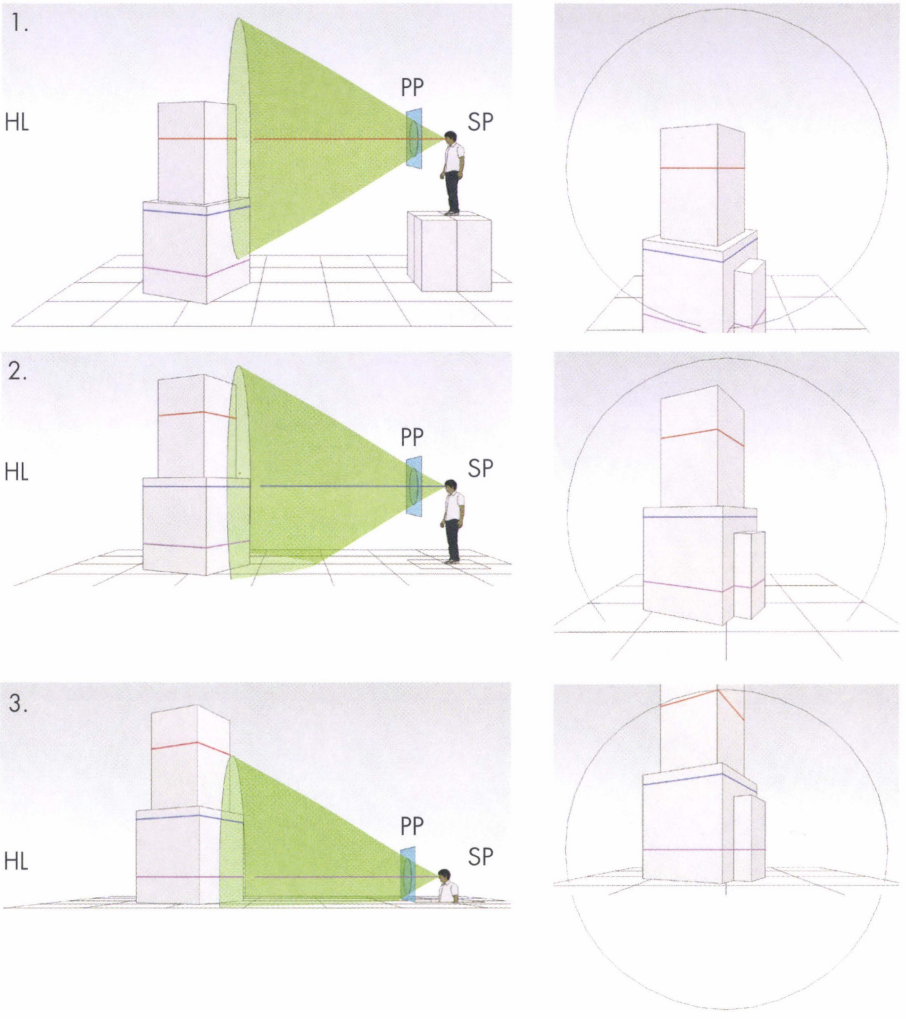

Tilting the head, or when the Line of Sight is not parallel to the ground

When the head is tilted, the Line of Sight, Cone of Vision and Picture Plane move in tandem. In a linear perspective there will be 3-point perspective. Notice the verticals starting to converge. Then take a look at the height line! The line corresponding to viewing height is still on the Horizon Line, but the Horizon Line now has moved relative to the Cone of Vision and is not splitting it in half as it did when the Line of Sight was parallel to the ground.

4. Looking up, the verticals are converging and the base of the object is no longer seen.

5. Looking down, the verticals are converging toward the bottom and the top of the object is no longer seen.

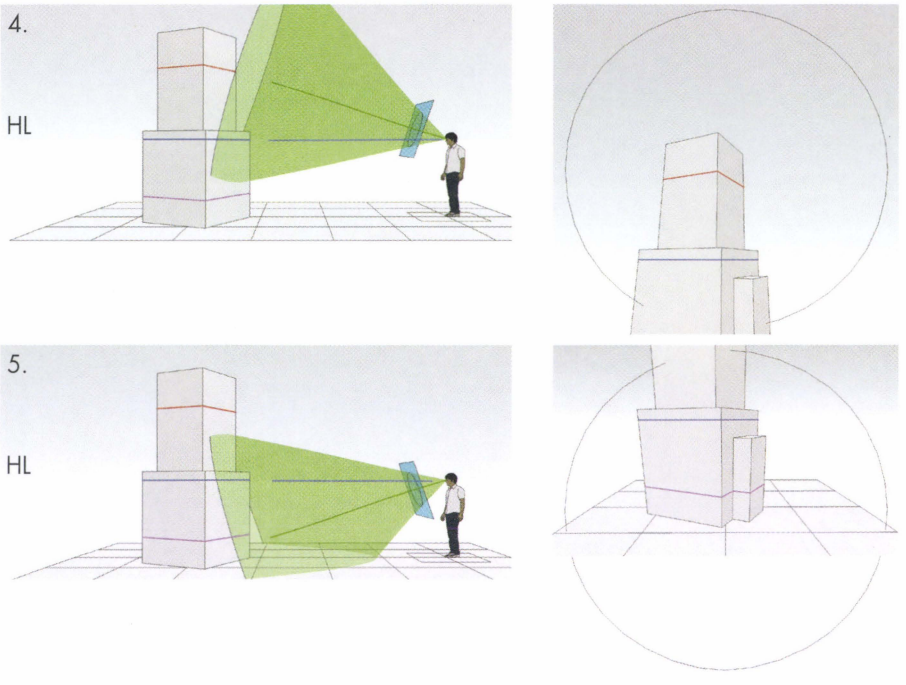

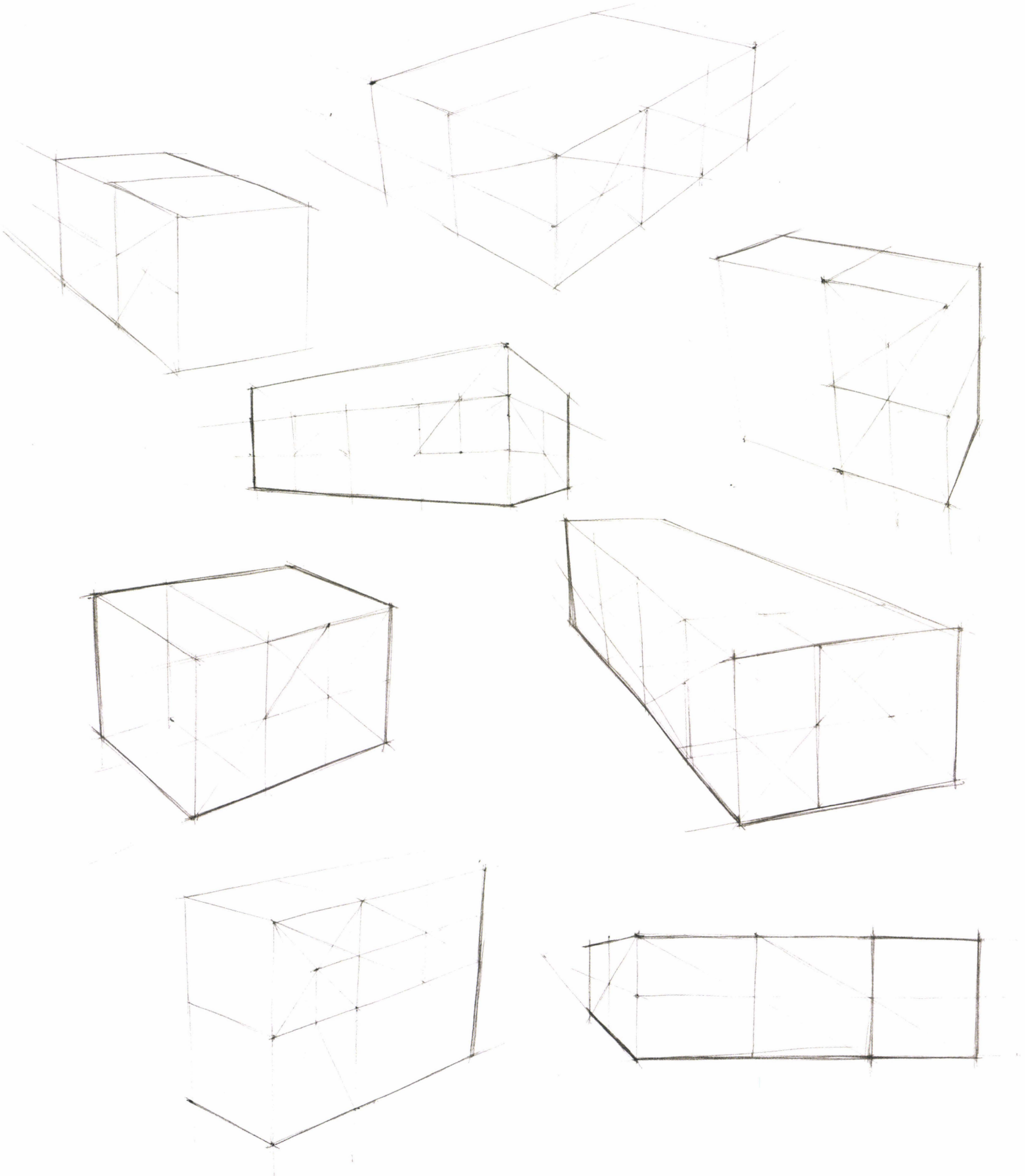

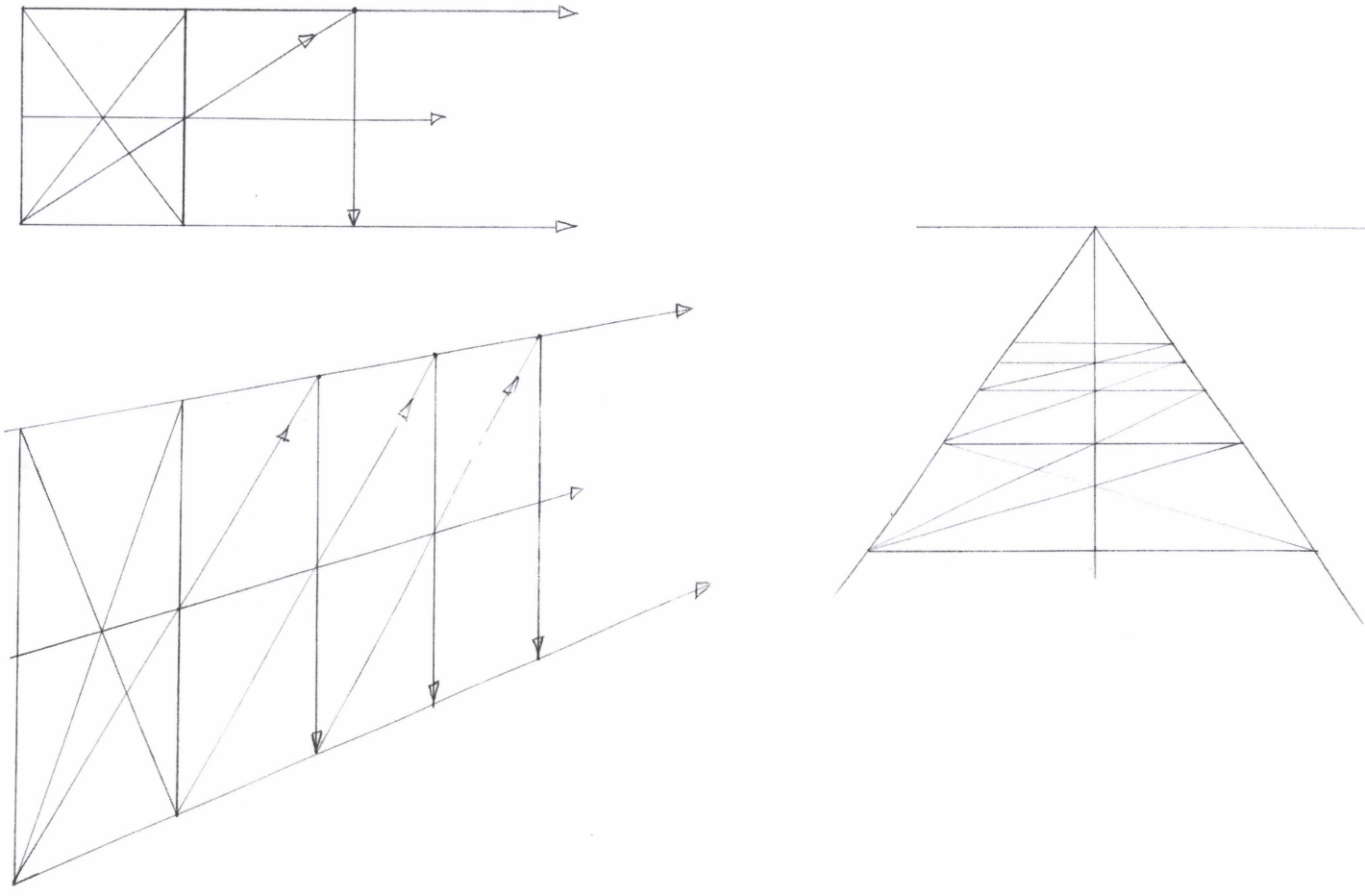

CHAPTER 03

PERSPECTIVE DRAWING TECHNIQUES

The drawing skills you acquired in the previous chapters are about to be put to good use! Construction techniques will be taught in this chapter that will provide a very powerful freehand sketching arsenal.

One of the goals of perspective drawing is to be able to find any point in space. Connecting two points creates a line and connecting multiple points can create a curve. Lines and curves are the building blocks to make objects of your imagination visible on the page.

The ability to multiply, divide and mirror lines and objects in perspective is essential. These basic techniques will be explained so you can start to create more complex drawings.

Drawing lines lightly is essential, since a lot of lines will be created in a small area. Stick with a single pen and do not erase!

Why one pen?
Switching pens only slows you down and breaks your concentration.

Why no erasing?
The drawings become so dense with lines that erasing can't be done without removing lines that are needed. Instead, draw lightly so that minor mistakes can be ignored. Work on the original drawing as long as possible. You can always create a clean overlay later.

DIVISION AND MULTIPLICATION OF DIMENSIONS IN PERSPECTIVE

Being able to divide and multiply dimensions in perspective is one of the key building tools used to generate drawings. These rectangles provide the scaffolding to build upon.

No measuring required. This is a great advantage because it's quite labor-intensive to measure in perspective. On the left are orthographic constructions and on the right are perspective examples. The techniques that work in the orthographic view also work in perspective.

Dividing a rectangle in half, in perspective

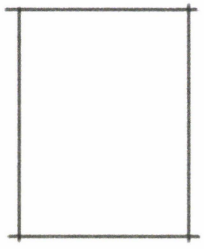

1. First, define the rectangle. Make sure to stay within the Cone of Vision to avoid unexpected results.

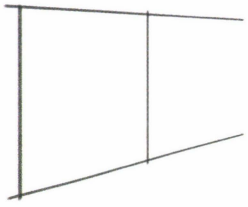

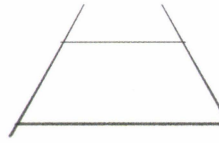

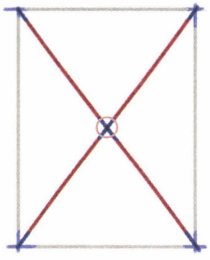

2. Draw the diagonals by connecting the opposite corners. Draw lightly, since these lines should disappear in the final drawing.

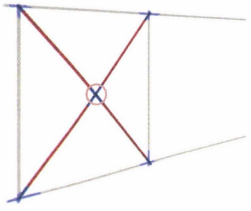

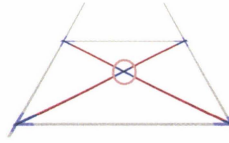

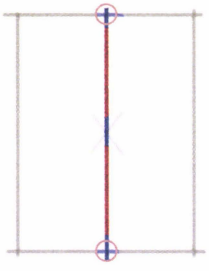

3. To divide the rectangle vertically, draw a vertical line through the intersection point of the two diagonals.

In the orthographic view the rectangle is divided evenly.

In the perspective view, the rectangle is also divided evenly, but in perspective. The distance between the closer two lines is wider than the distance between the ones further away. This is called foreshortening.

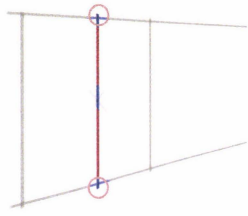

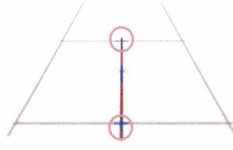

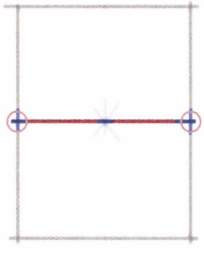

4. This works equally well when dividing horizontally. Make sure that the vertical and horizontal lines follow the perspective grid.

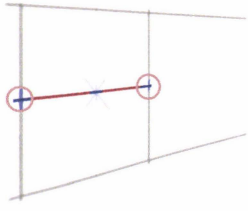

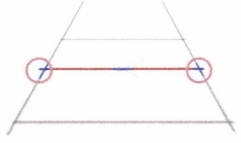

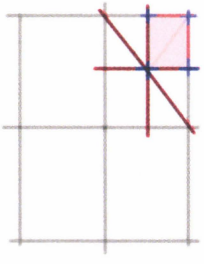

5. Use this technique to find even subdivisions. This construction has been further divided into 1/4 as well as 1/16 (shaded pink).

Duplicating a rectangle, in perspective

Reverse the technique used to divide a rectangle in order to duplicate any rectangle. This works great for building symmetrical objects, since the duplication line can be a centerline, too.

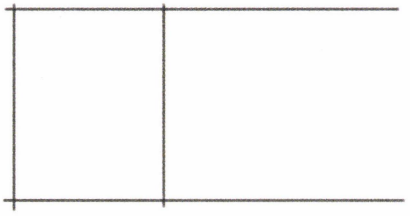

1. Define the rectangle and the direction to multiply toward. Since the height will stay the same, extend the lines that go toward the multiplication direction.

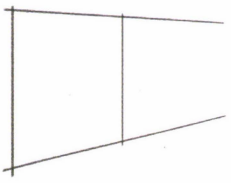

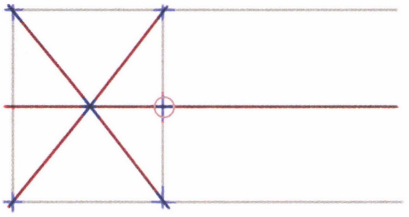

2. Find the midpoint of the multiplication axis. This point can be found with the diagonals or by estimating the halfway point when the dividing line is horizontal or vertical.

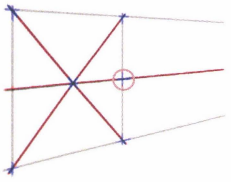

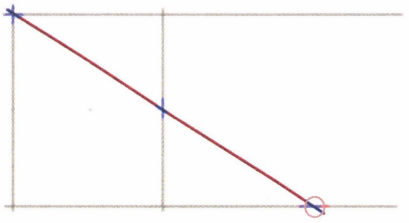

3. Draw a diagonal that connects the far corner of the initial rectangle through the midpoint until it crosses the extended line.

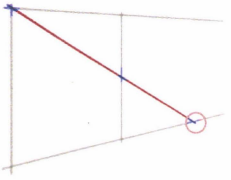

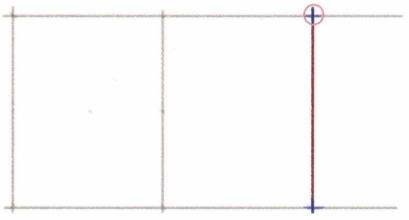

4. Draw a parallel line from the intersection to find the boundary of the duplicated rectangle.

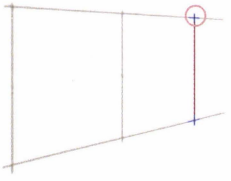

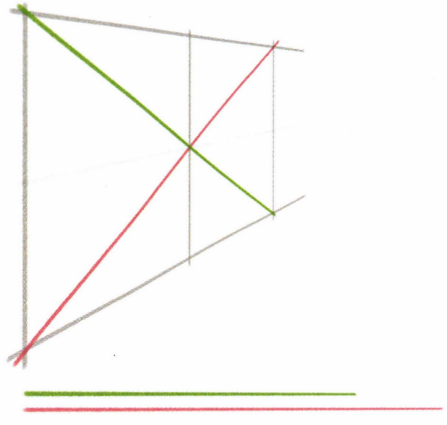

TIP: Choose the shorter line (green) to draw! There are two possible diagonals but the shorter one is the better option, since shorter hand-drawn lines are more precise.

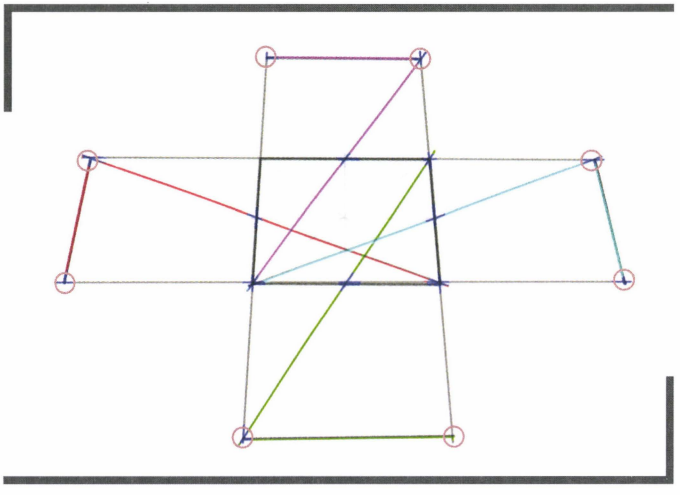

TIP: Multiplying in all directions is possible with this method.

MULTIPLYING AND DIVIDING RECTANGLES

Pay attention to your craft and make sure to draw light construction lines. The rectangles can be observed automatically foreshortening. Rotate the page to get the best position for your arm to draw those straight lines. Eventually there will not be a need to draw all the lines; some tick marks will suffice.

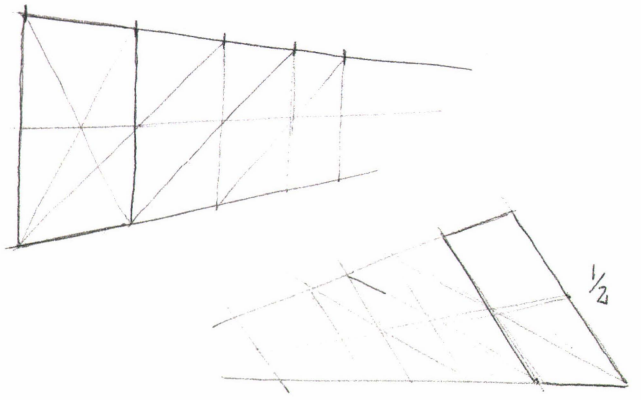

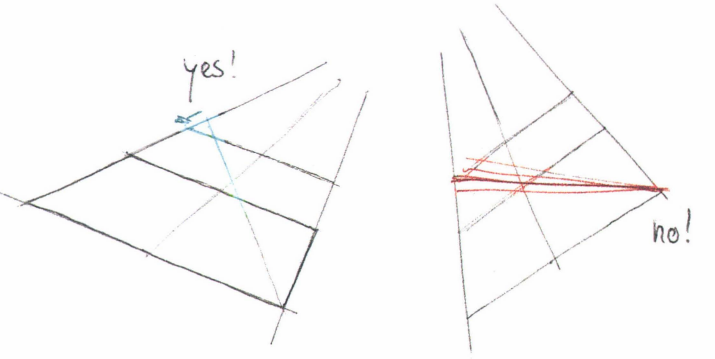

1. Draw a lower and an upper line toward a common Vanishing Point.

2. Create a rectangle with two parallel lines.

3. Now that there is a base rectangle, multiply it either toward or away from you. The rectangles will foreshorten automatically in perspective.

Watch out when making corrections. Avoid adding multiple lines to find the right one. It will only darken the lines and draw attention to the area of uncertainty. Just draw one line and correct it by making an educated guess as to where the actual subdivision line should be. This will produce cleaner drawings and will be faster!

Multiplying and dividing boxes

More fun are the constructions where you stack boxes on top of one another. *Draw through!* Show the hidden edges of boxes where they are helpful. This is a way to double-check the constructions automatically. Should lines not meet at the expected intersection, go back and check where things started to misalign. Being deliberate about this will increase learning speed.

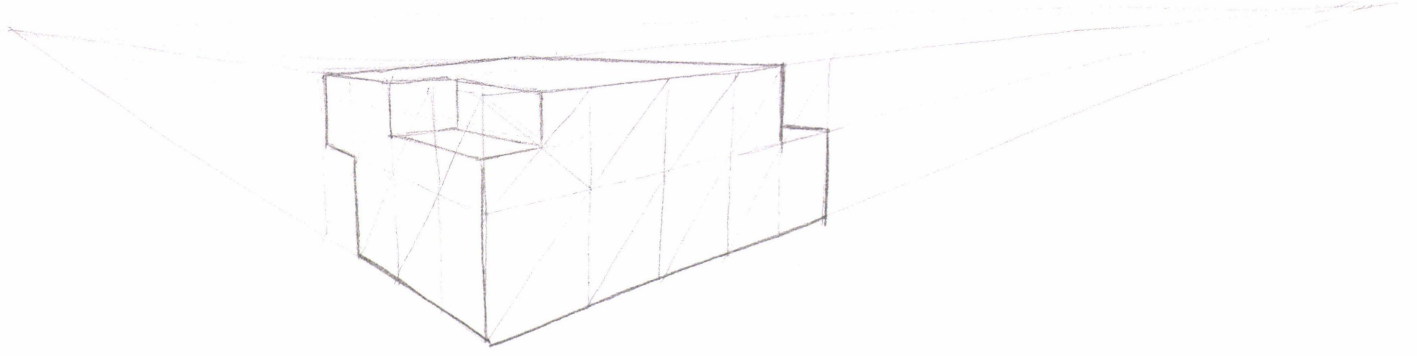

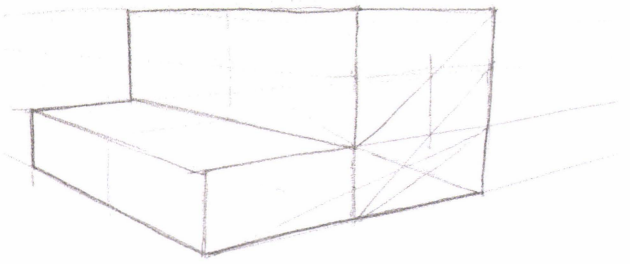

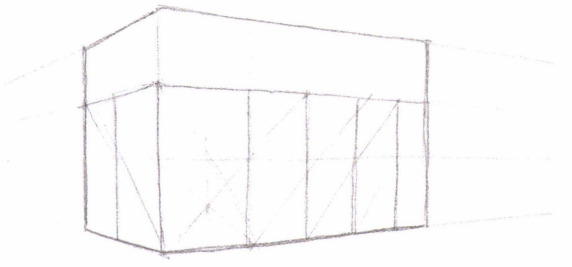

DIVIDING INTO ODD-NUMBERED PROPORTIONS

What happens if there is a need to divide by 3 or more? This can be accomplished with a very fundamental technique of transferring a proportion into perspective. In this example let's subdivide a rectangle into 5 equal units.

Top view

Perspective view

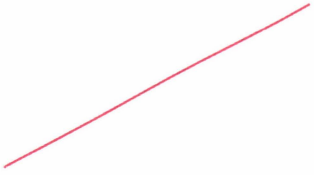

1. Define the plane.

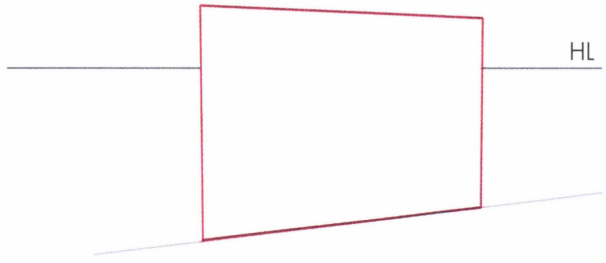

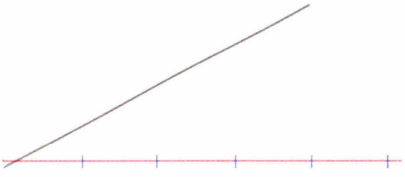

2. Draw a line parallel to the Horizon Line, starting at the front edge of the plane. Divide this line into 5 equal segments.

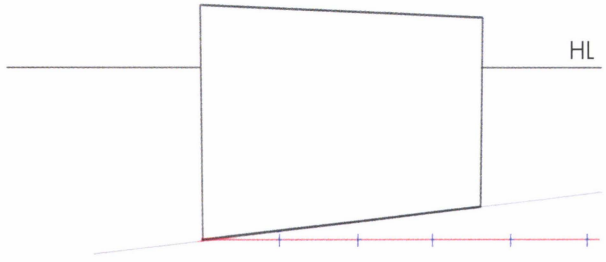

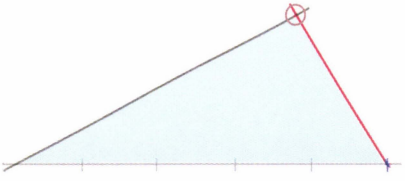

3. Connect the last subdivision point to the end of the plane and continue the line to the Horizon Line. All lines parallel to this line will converge at this same Vanishing Point.

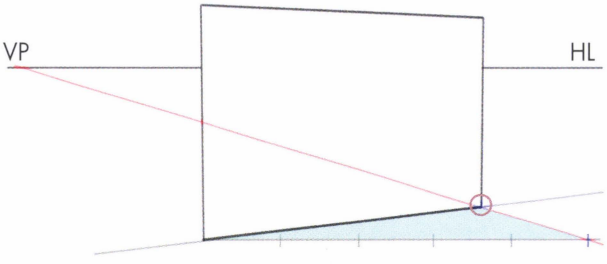

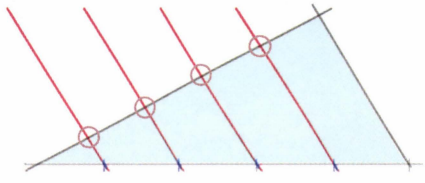

4. Draw parallel lines in perspective from each segment point to the new Vanishing Point.

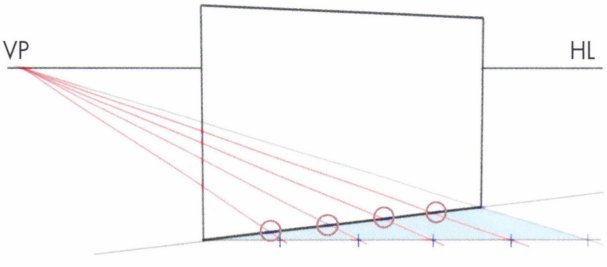

5. Draw vertical lines at each of the intersection points to transfer the subdivisions.

You have divided a rectangle into 5 equal sections, in perspective.

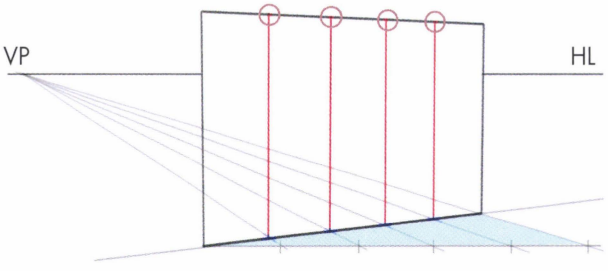

MIRRORING IN PERSPECTIVE

It is essential to be able to mirror elements to draw symmetrical objects. To mirror any point in perspective, use one of these rectangle multiplication techniques. These techniques are very versatile and can be mixed and matched.

Mirroring horizontal planes

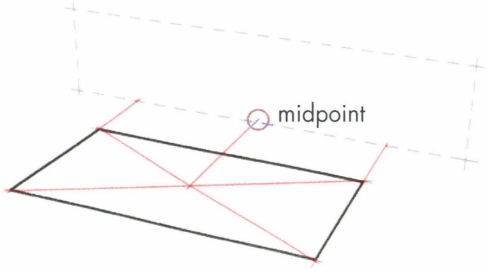

1. Draw a rectangle and a perpendicular mirror plane. Extend the width lines of the rectangle toward the mirror plane until they intersect it. Draw diagonals in the rectangle to find its midpoint, and draw a line from that point, in perspective, to the mirror plane.

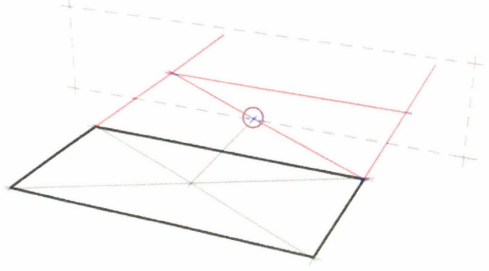

2. Use the mirror point to mirror the closer line to the mirror plane with the multiplication technique, then move on to the far line.

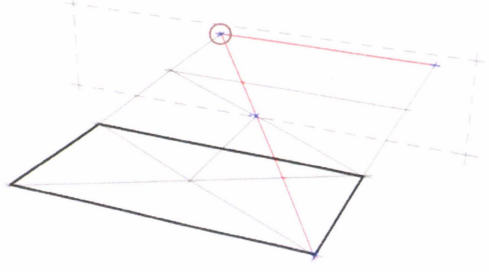

3. Mirror the far line by using the multiplication technique.

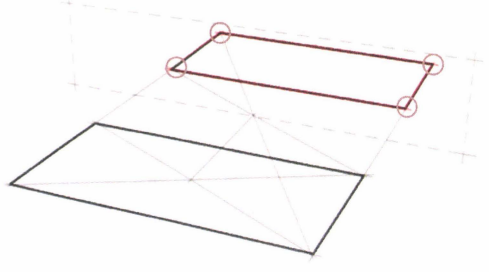

4. A mirrored plane has now been created. This technique can be applied for other parallel plane constructions. Remember this is all based on the multiplication technique!

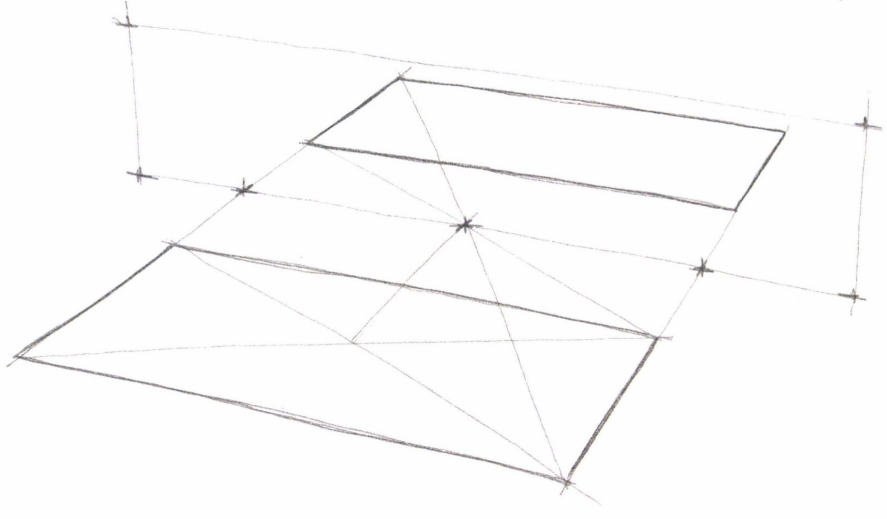

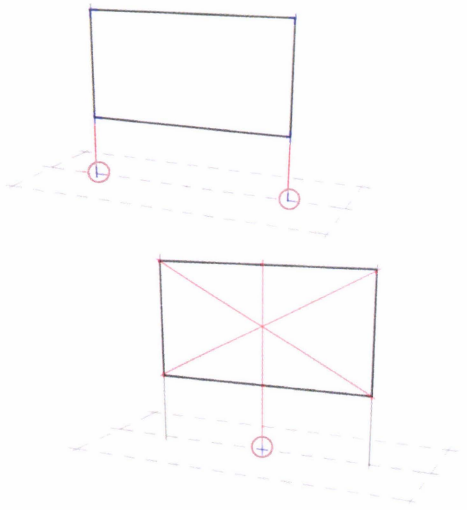

1. Here, the same technique is used to mirror a vertical plane. Draw diagonals to find the midpoint of the mirror plane.

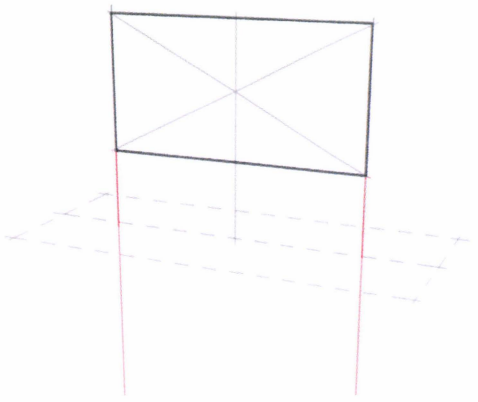

2. Extend the width dimensions of the rectangle for the expected position of the mirrored rectangle and find the centerpoint for mirroring.

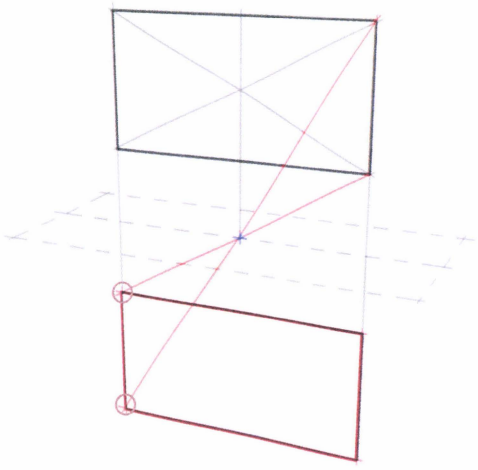

3. Complete the construction with the diagonals and find the height of the mirrored rectangle. Darken the lines of the resulting rectangle.

Mirroring offset planes

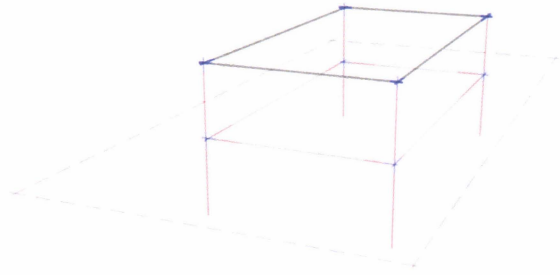

1. Set up a plane that hovers above the ground or mirror plane. Extend the lines at each of the corners in the mirror direction.

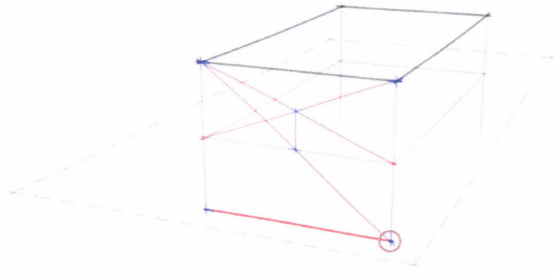

2. Mirror the front line by using the multiplication technique.

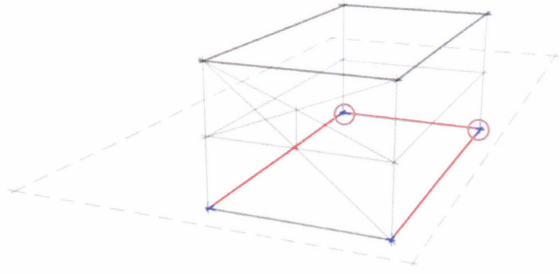

3. Complete the plane by following the perspective grid and using the vertical lines to define the size of the plane.

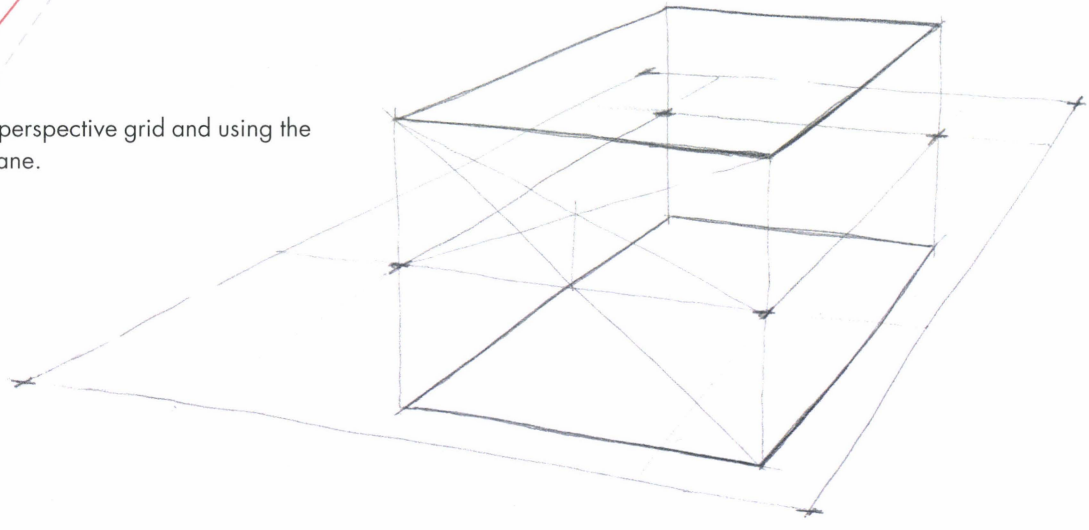

4. Darken the outer edges.

MIRRORING TILTED PLANES

Mirroring tilted planes uses the same technique of multiplying rectangles. These side-by-side examples illustrate this principle. They are separate constructions, mirroring different tilted planes.

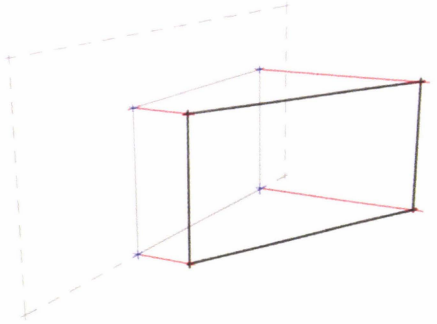

1. Set up a tilted plane and the plane to be used as a mirror. Use a perspective grid to determine where both planes are located in space, relative to each other. This is essential to stay clear on the construction.

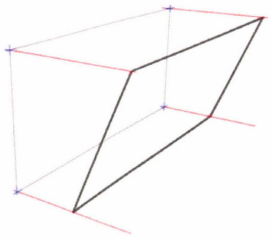

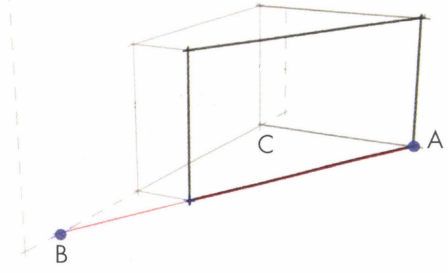

2. Choose a point (A) to mirror. Extend the tilted plane line (red line) and the mirror plane line to mark the intersection point (B). Drop a vertical line from the top of the tilted plane to the ground plane (C), if it is not already there as part of the construction.

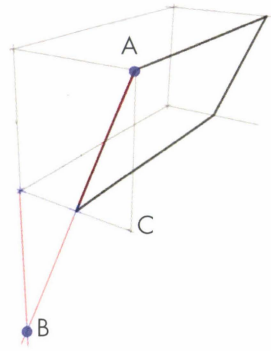

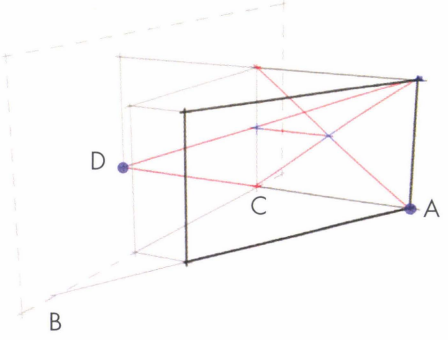

3. Use the multiplication technique to mirror point A, to create point D.

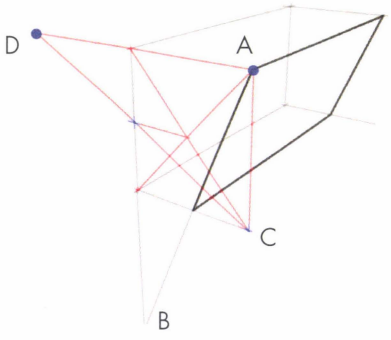

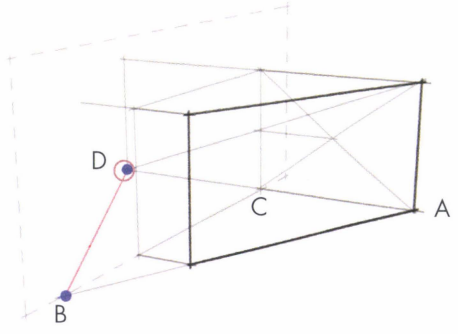

4. Draw a line between points B and D. The angle of the plane has now been mirrored in perspective.

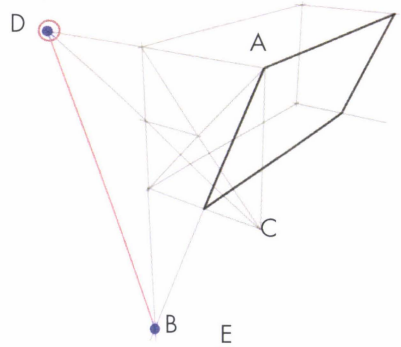

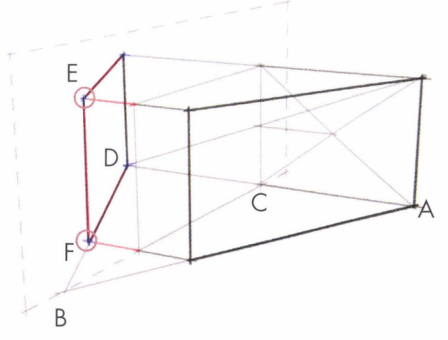

5. To finish drawing, use the perspective grid guidelines going to the LVP to transfer a few more mirrored points (E and F). Connect these points to create the mirrored planes.

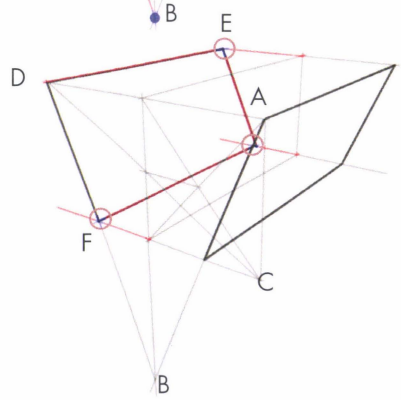

MIRRORING ROTATED, TILTED PLANES

Sometimes drawings require dealing with planes that have a more complex position in space. Three points define a plane. To create a rectangle, the fourth point needs to sit on the same plane. This is easy to forget when drawing. Things can be sketched that are not physically possible. Check out M. C. Escher; he did it on purpose.

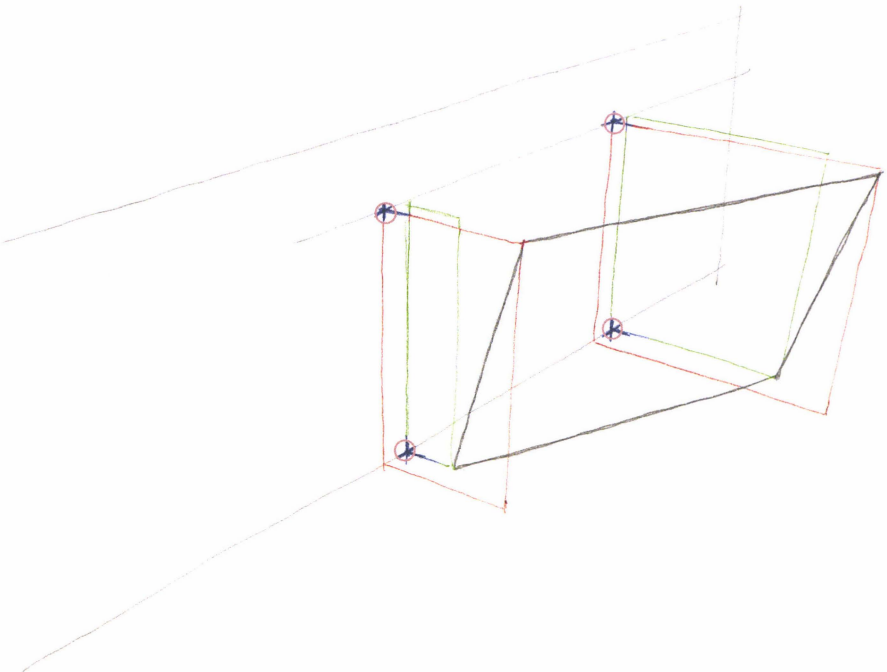

1. Take a look at all four points of the tilted and rotated plane. Each of the points moves deeper into perspective. Only two 2-point sets match up in height, but none match up in depth and width.

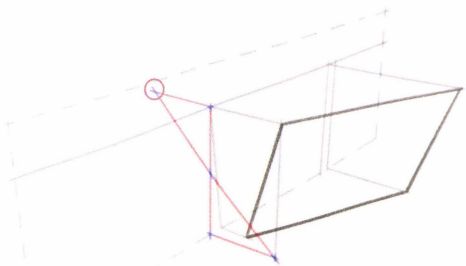

2. Take the top-front point and mirror it across the mirror plane. Use the rectangle duplication technique.

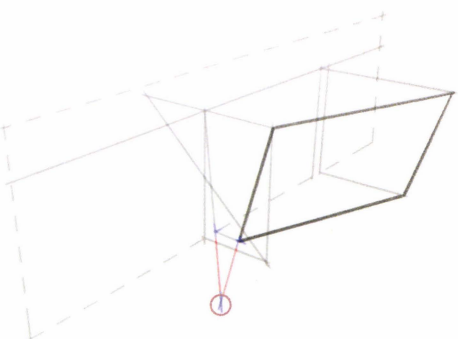

3. Extend the tilted centerline and cross it with the extended tilted front edge.

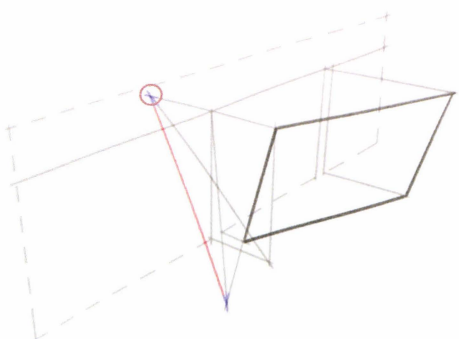

4. Connect the intersection point with the already mirrored top-front corner.

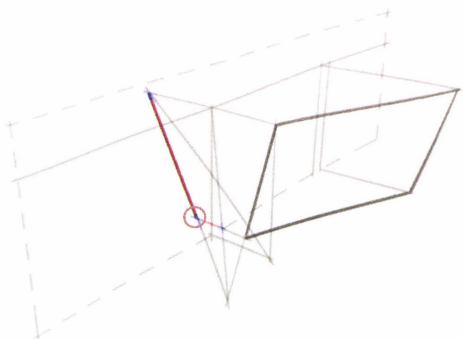

5. Draw a line from the lower-front corner, perpendicular in perspective to the mirror plane. Where it intersects the line from step 4 is the lower-front corner, mirrored.

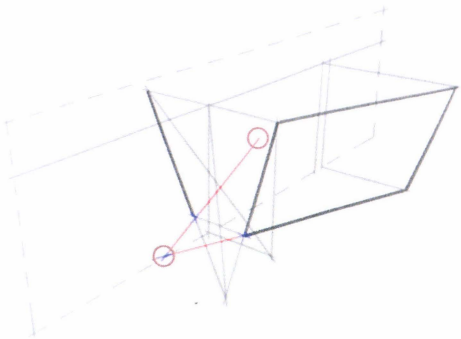

6. Now find the mirrored line on the ground. Start in the lower-front corner and extend the line on the ground until it intersects with the mirror plane.

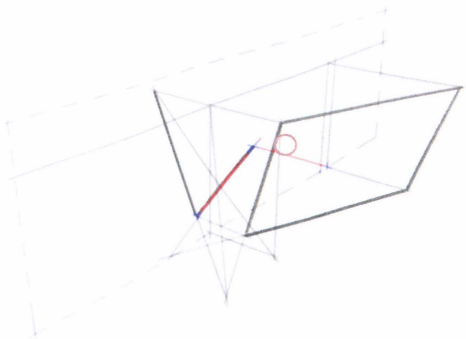

7. Clip the line at the correct length by extending the line that is perpendicular to the mirror plane and runs to the lower back edge of the rectangle. This will cross the mirrored directional line and determine the length of the line on the ground.

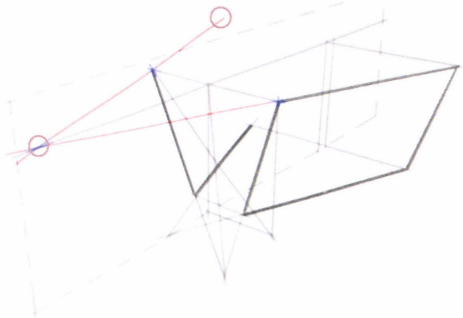

8. Repeat the same technique to find the upper edge direction and length.

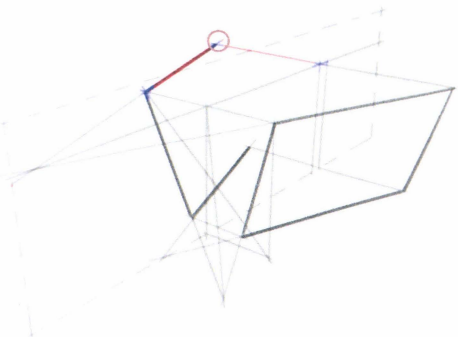

9. Find the endpoint of the upper edge by extending the upper line in the back of the construction.

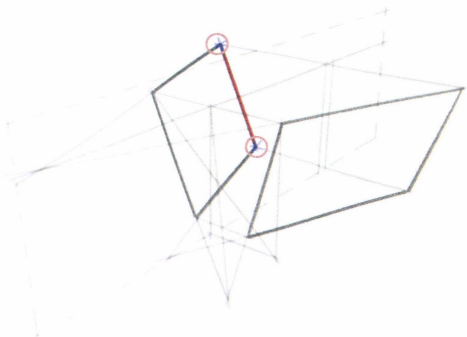

10. Connect the open edges. You have mirrored a plane that was tilted and rotated.

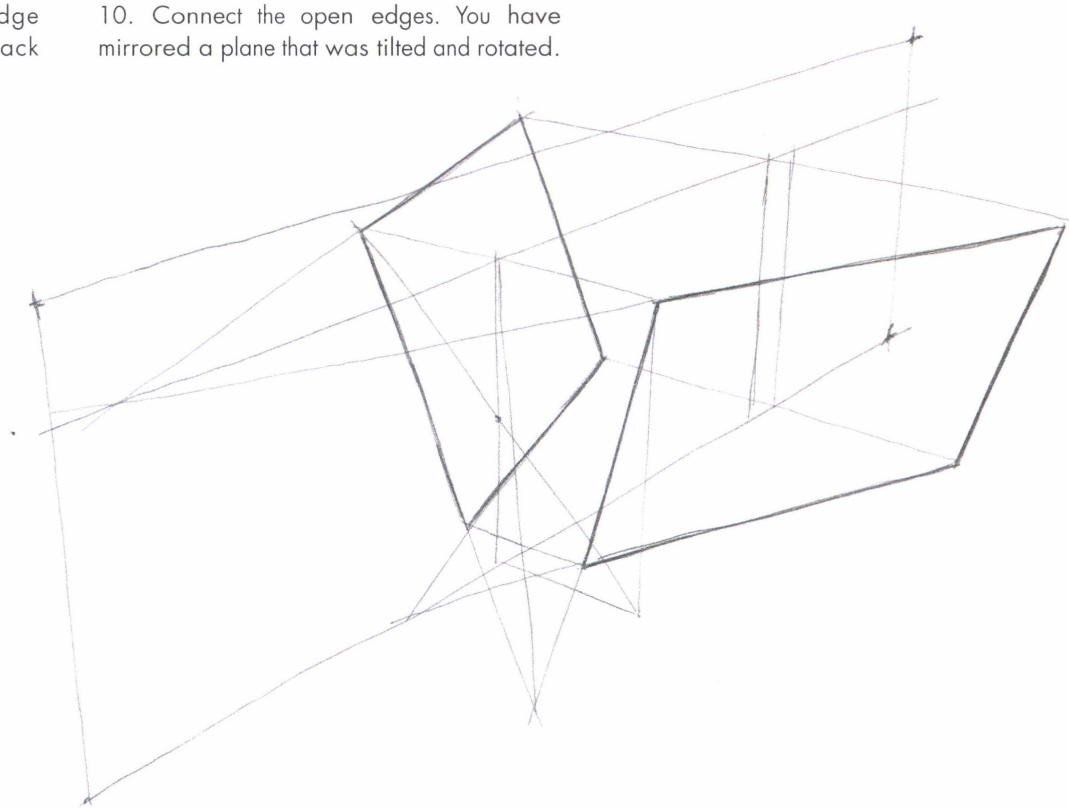

11. Darken the edges of the planes.

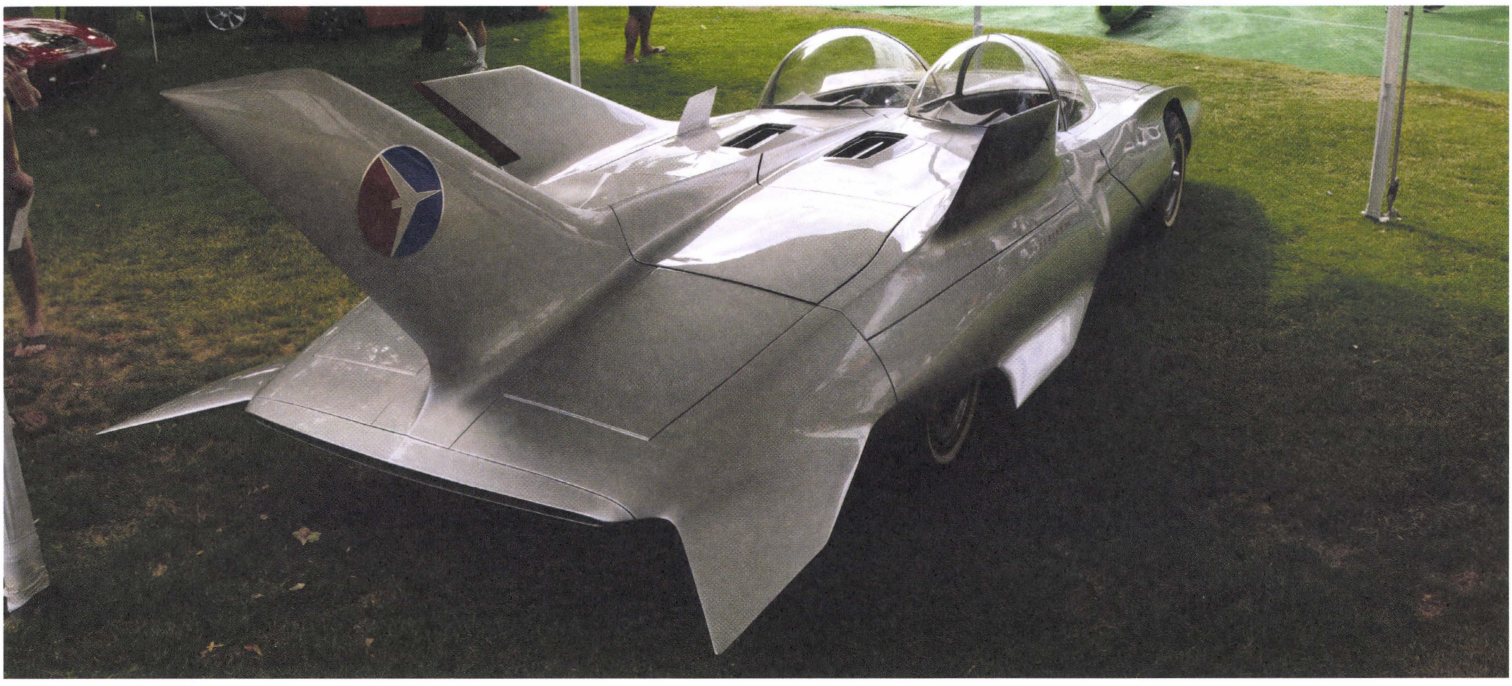

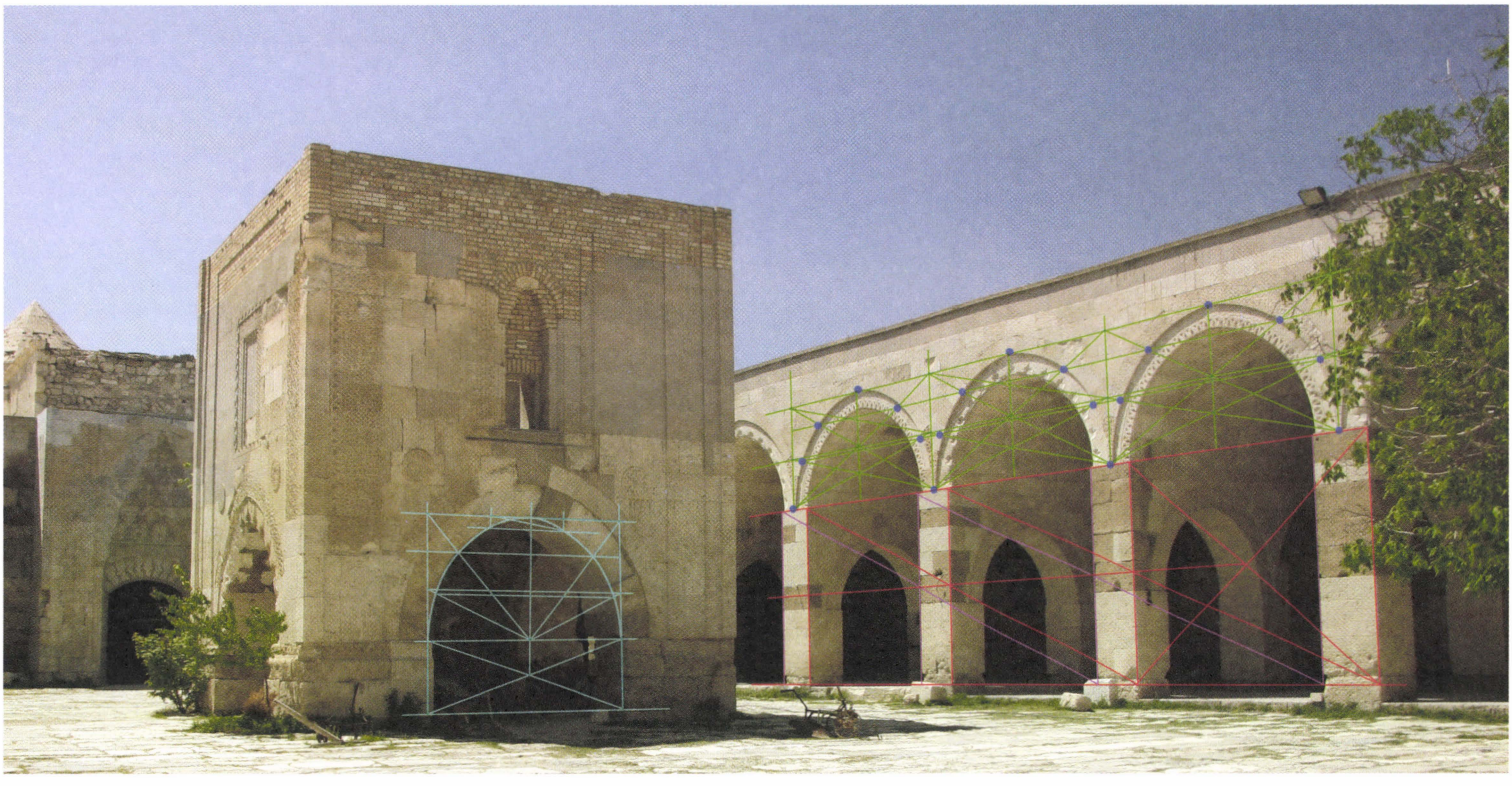

Practicing these constructions raises awareness of patterns in the environment. Mirroring planes seems like an abstract exercise, but becomes very applicable as soon as you want to draw a car or a jet plane. There are a lot of multiplications in buildings too. In the photo, the green construction lines run through the same points on multiple arches, which is a big timesaver. After finishing this chapter and learning about mirroring curves, take another look at this construction and there will be increased understanding.

MIRRORING 2D CURVES

Mirroring curves gives you control over organic surfaces. The base construction still relies on straight lines and perspective control. 2D curves are by definition on a plane. This plane can be tilted in 3D space.

Orthographic View

Perspective View

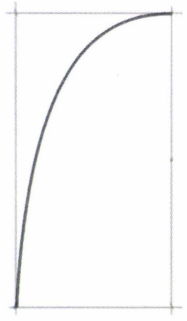

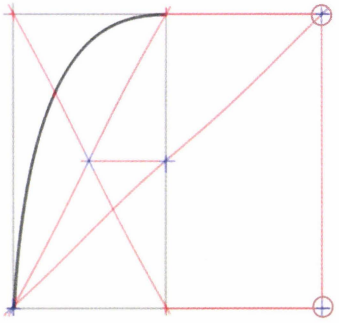

First, define the plane on which the 2D curve is to be drawn. Box the plane into a rectangle and mirror this rectangle in the direction you want to mirror the curve.

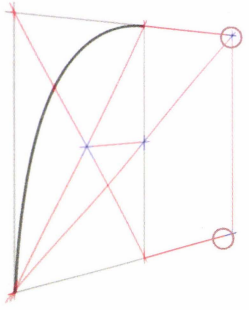

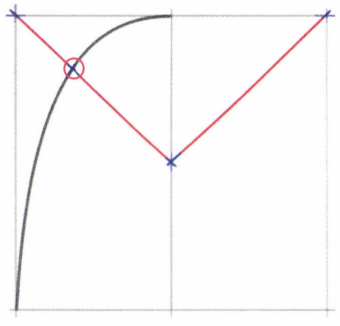

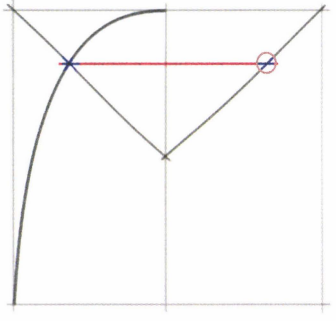

Technique 1:
1. Draw a V that is mirrored by using the corners of the rectangle and a common point on the centerline.
2. Draw a horizontal line from the intersection of the curve and diagonal, until it crosses the mirrored diagonal.
3. Transfer multiple points that will define the mirrored curve.

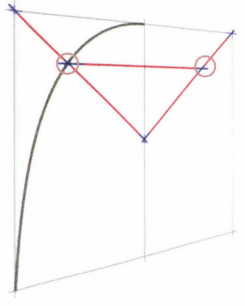

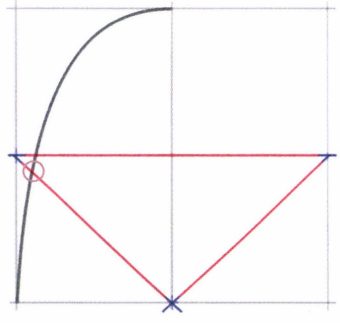

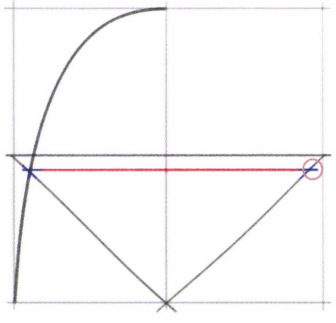

Technique 2:
Instead of drawing the diagonals to the corners of the rectangle, use the middle line that was generated by the original construction.

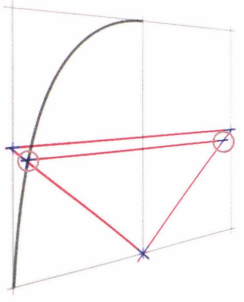

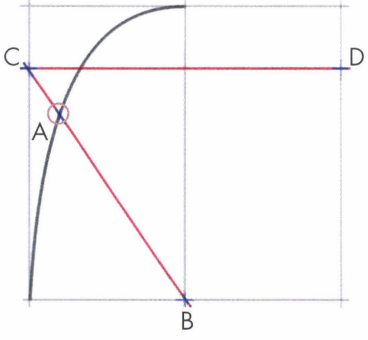

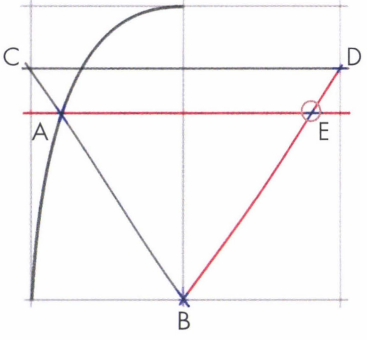

Technique 3:
1. In this case decide which point to mirror on the curve (A).
2. Place a diagonal through that point to the centerline (B).
3. Add a horizontal line from points C to D.
4. Mirror the diagonal line by drawing a line from B to D.
5. Add an additional horizontal line from the intersection points A to E.

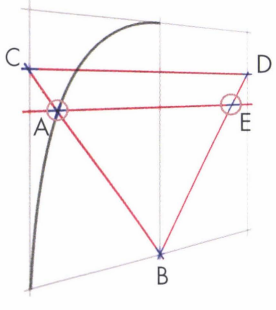

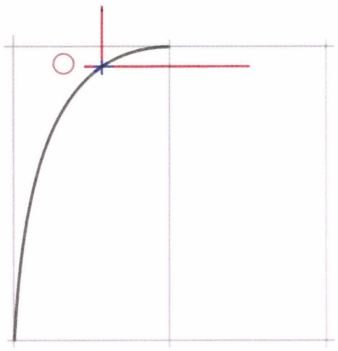

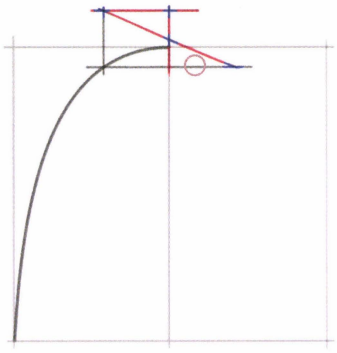

Technique 4:
The rectangle duplication method works here, too.
1. Define the point to mirror.
2. Draw a vertical and a horizontal line to create a rectangle.
3. Duplicate the rectangle to use as the base to mirror the point.

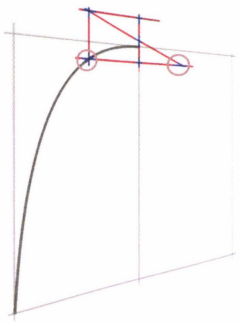

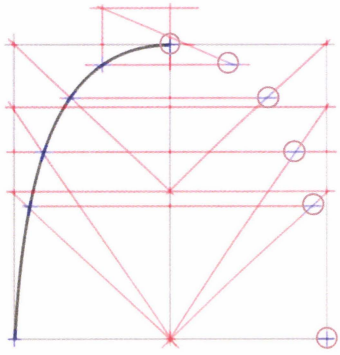

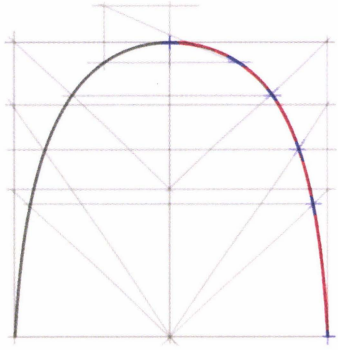

All Techniques Combined:
Here all methods have been combined to show how the points define the mirrored curve.

Which method should be chosen? Pick the technique that provides the most points in the most efficient way, and combine techniques as needed.

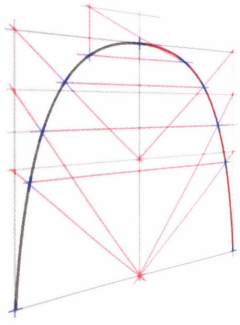

MIRRORING A 2D CURVE ON A TILTED SURFACE

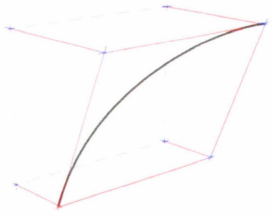

1. Define the tilted surface. Draw a curve on it.

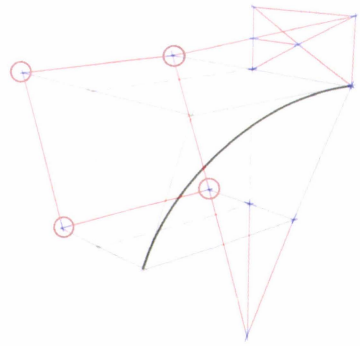

2. Use the plane mirroring technique to create the mirrored plane on which the mirrored curve will sit.

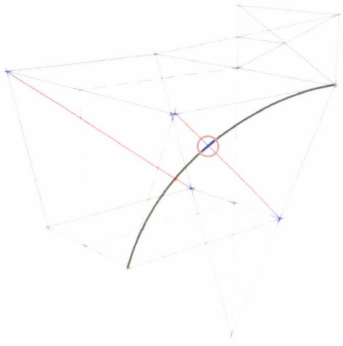

3. Draw a diagonal on both planes, so that the nearside diagonal intersects the curve.

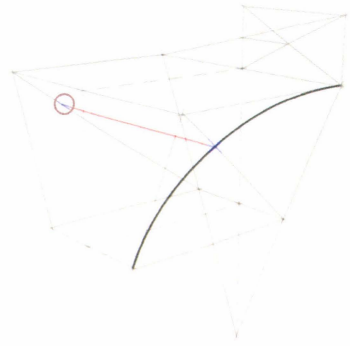

4. Draw a line in the perspective grid direction from the intersection point until it crosses the mirrored diagonal.

There are now three points for the mirrored curve: the start point, the endpoint and the new point just created.

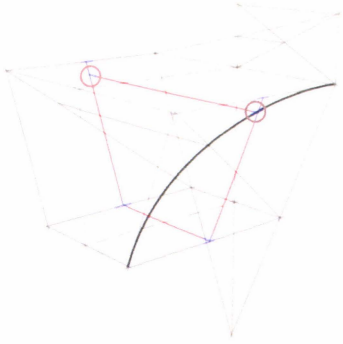

5. Draw a line from the intersection of the centerline of the tilted plane to the curve. Transfer the information to the mirrored plane.

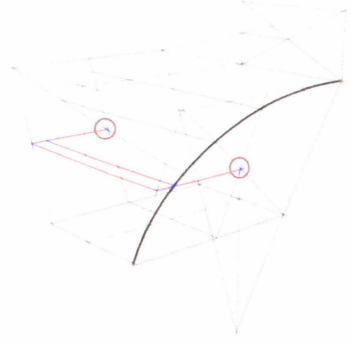

6. Repeat the previous step, but this time use the horizontal middle line to find the intersection with the curve.

These lines can be moved to wherever the transfer point is desired.

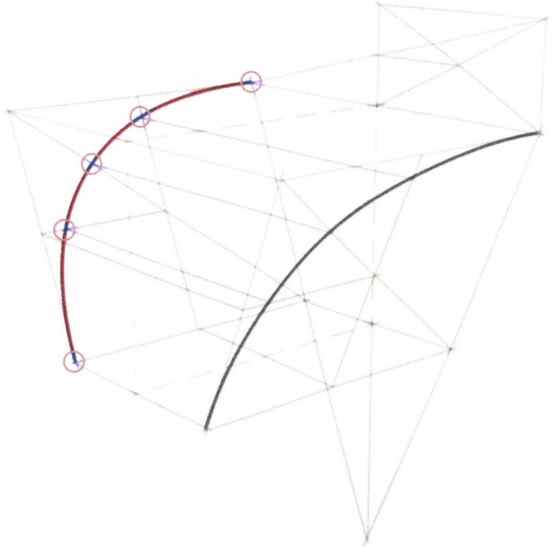

MIRRORING 3D CURVES IN PERSPECTIVE: THE 2-CURVE COMBO

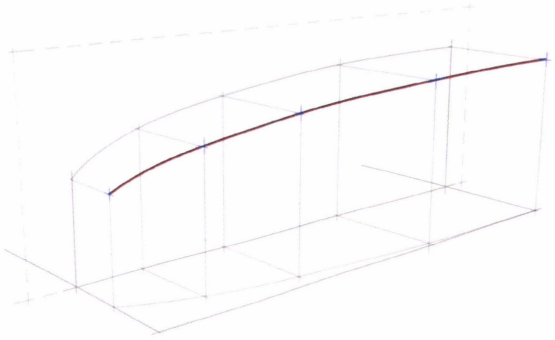

1. Build a full construction of the 3D curve. This is done with the 2-curve combo technique on page 089. Knowing where the line is in space is essential for these drawings.

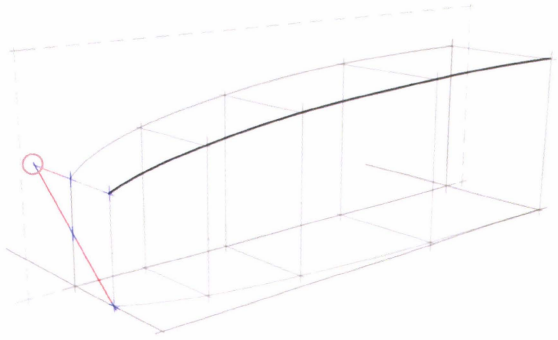

2. Start with mirroring the starting point of your curve. The rectangle is being duplicated, but skip the vertical line since the vertical is not essential to the goal. Guessing the mirror point is possible here since there is very little perspective foreshortening in the vertical line.

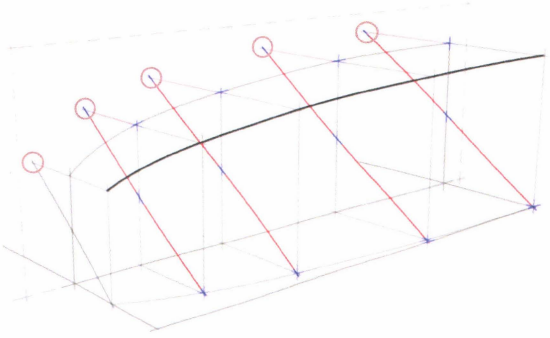

3. Repeat this process for the rest of the points on the curve. Mirroring some strategic points instead of all points is an option here, but in the beginning add enough points so that the curve can be found with confidence.

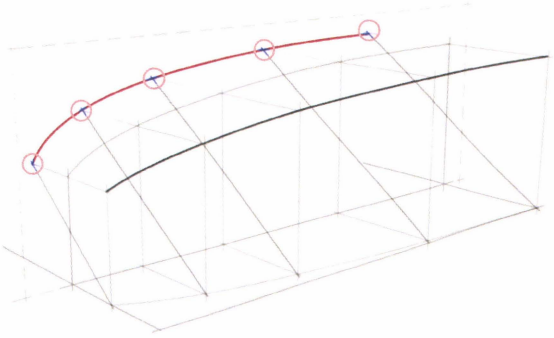

4. Connect the points to find the mirrored curve and draw a smooth line. If one point seems off; just compensate as needed.

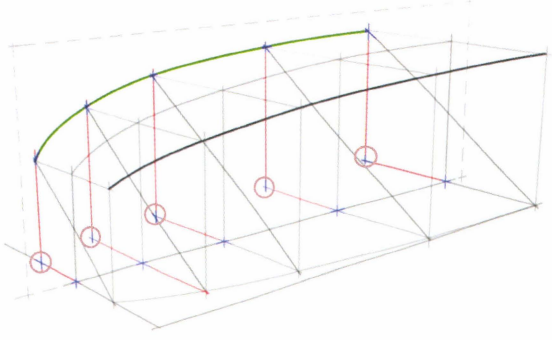

5. Once the curve is mirrored it's time to find the footprint of the curve. Drop in the verticals until they cross with the extended lines on the ground.

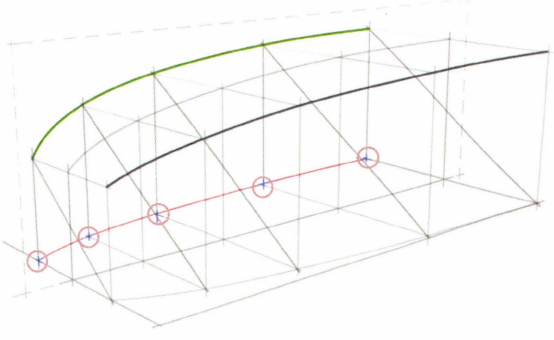

6. Now there are two mirrored curves: one 3D curve (green) and one flat curve (black). This technique creates a 3D volume at the same time it mirrors the curve.

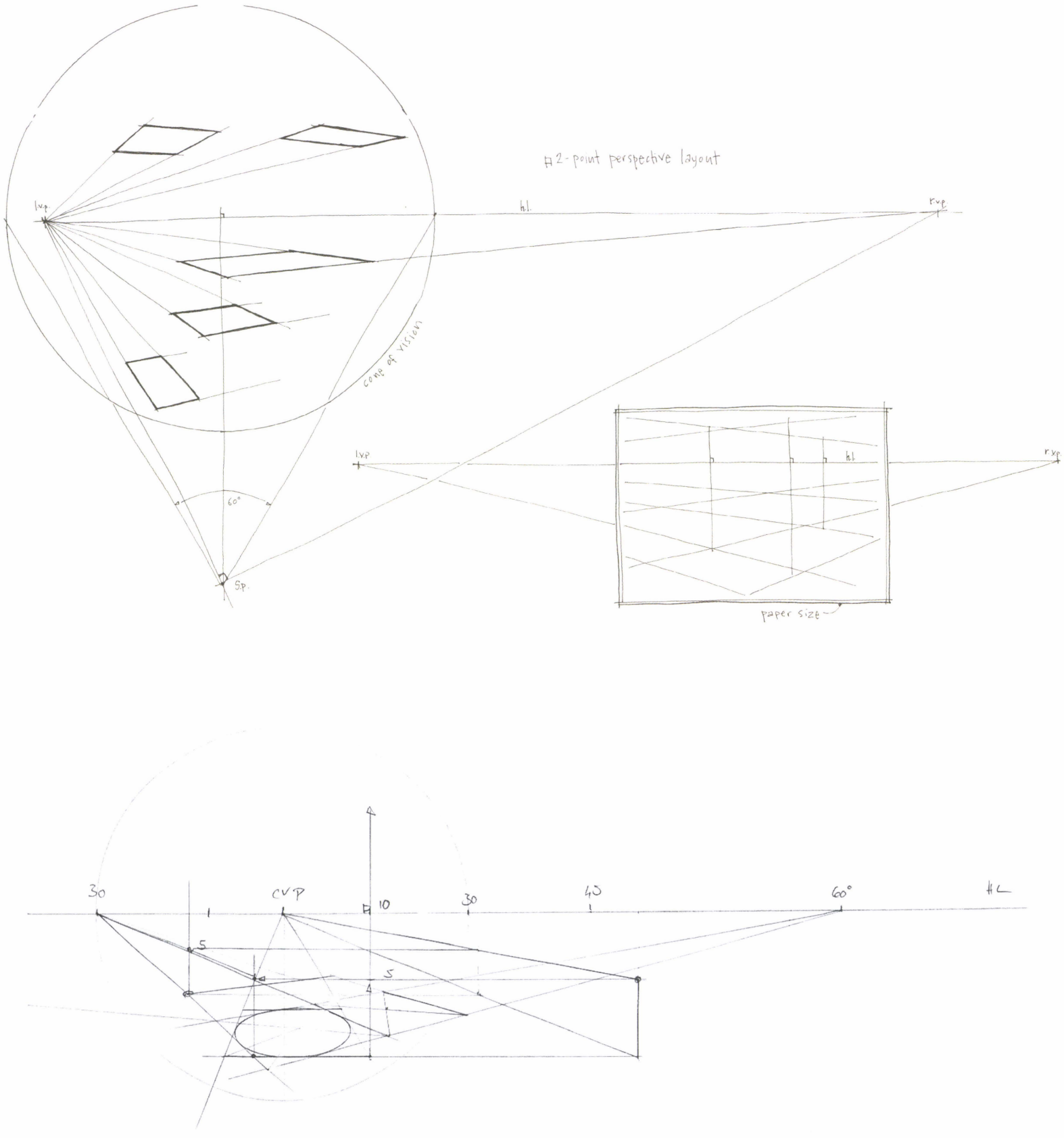
#2-point perspective layout
l.v.p
h.l.
r.v.p
cone of vision
60°
S.p.
l.v.p
h.l.
r.v.p
paper size
30
CVP
10
30
40
60°
HL
5
5

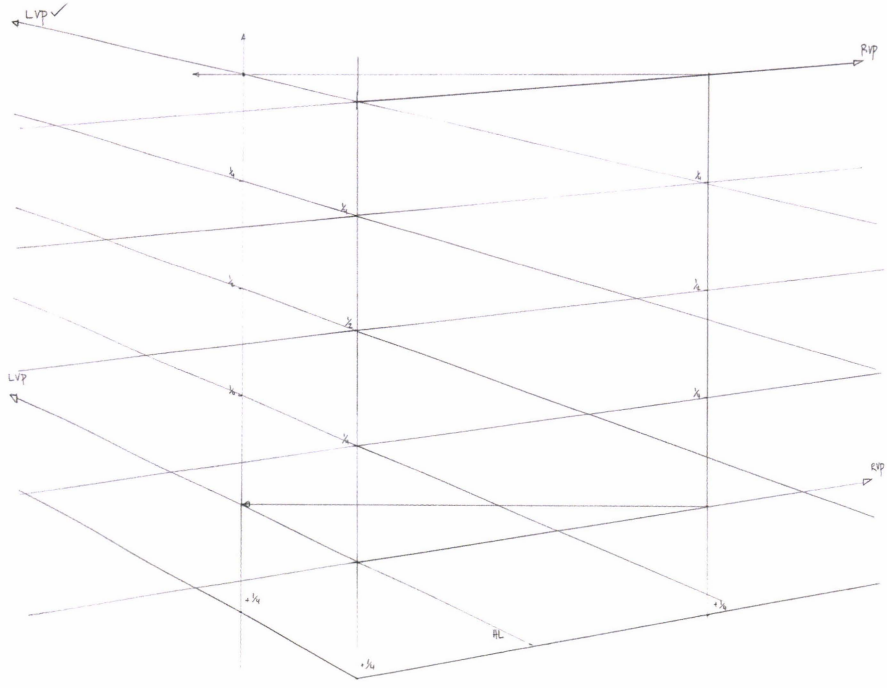

CHAPTER

CREATING GRIDS 04

This chapter focuses on constructing and understanding grids.

The most commonly used perspectives have Vanishing Points that are off the page. Grids help aim lines toward those Vanishing Points.

Grids come in very handy when working with complex drawings and multiple objects. Understanding the basics of grids is important in being able to decide how to use photographs or computer-generated underlays.

When working without a grid, a lot of effort is spent trying to aim lines in the correct direction, with the worst part being not knowing whether or not the lines were on target. Having a basic grid alleviates this problem by aiming the lines. This makes it possible to concentrate on construction and later, on design, as drawing becomes more automated.

Eventually you can stop using grids for the easy things, but for difficult constructions with hinged parts, rotated elements, and multiple views of the same object, a base grid is very helpful.

Grids can be reused often since they are not drawn on, but rather placed under the drawings. A grid used as an underlay should be as precise as possible, and it's important to choose the most effective way to create it, based on its particular use. It can be hand-drawn with a straightedge, drawn in 2D software or generated by 3D software. Creating a process and updating it on a regular basis is part of being a designer and a problem solver.

PERSPECTIVE GRID TYPES

Let's look at a couple types of perspective grids that are often encountered and that are useful for drawing. It's important when choosing a grid to consider the purpose of the final drawing. Some grids are better for the ideation of an environment than for products. To make things more complicated, it also depends on the user's comfort level. There is no absolute right or wrong. These are guidelines; not the law!

1-Point Perspective Drawings

The 1-point perspective grid is excellent for ideation and adding perspective to a side-view sketch. It's easy to generate and the perspective from left to right and up to down is easy to control. This makes it simple to transfer proportions, since they are one-to-one and just scale smaller when going deeper into the perspective. However, it is more difficult to control the depth of an object in this perspective. The depth can become very shallow and the perspective can compress a lot as it gets closer to the Horizon Line.

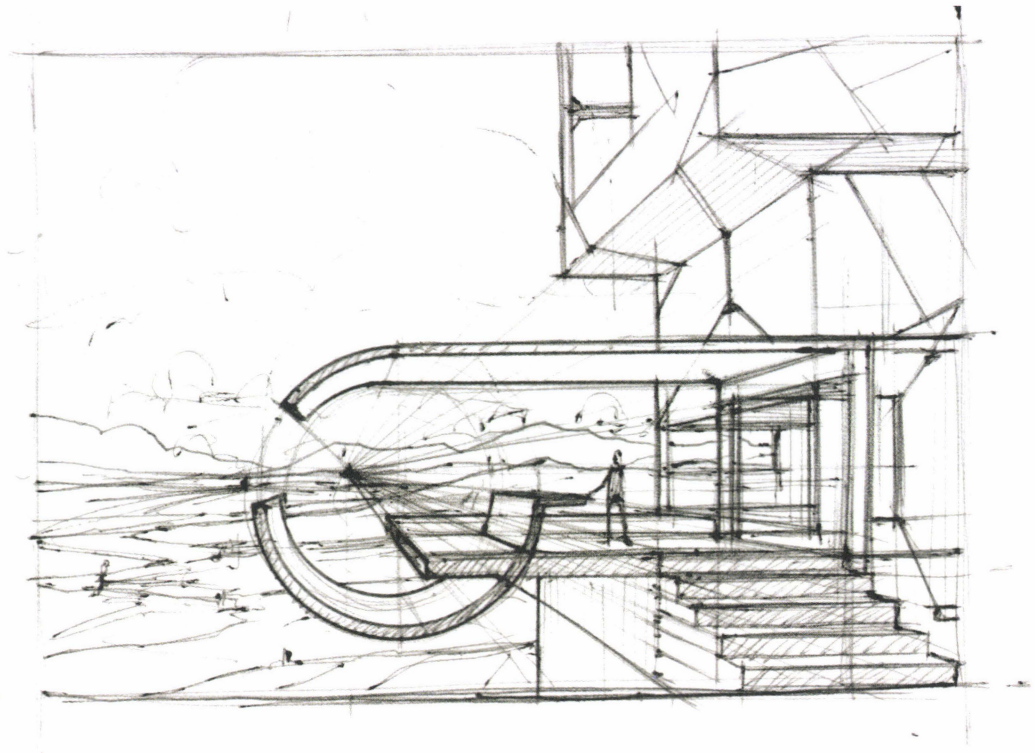

2-Point Perspective Drawings

The 2-point perspective grid is one of the most commonly used grids. The grid changes with the orientation of the object to the viewer. Having an individual object in 2-point perspective is rather basic, but when it comes to having two or more rotated objects on the same surface things become more tricky. A 2-point perspective gives the viewer a good idea of the orientation in space of the objects being shown. The effect is similar in a 3-point perspective, but the drawing complexity increases since the verticals are not parallel to one another. Having the verticals perpendicular to the Horizon Line in this perspective grid makes drawing much easier.

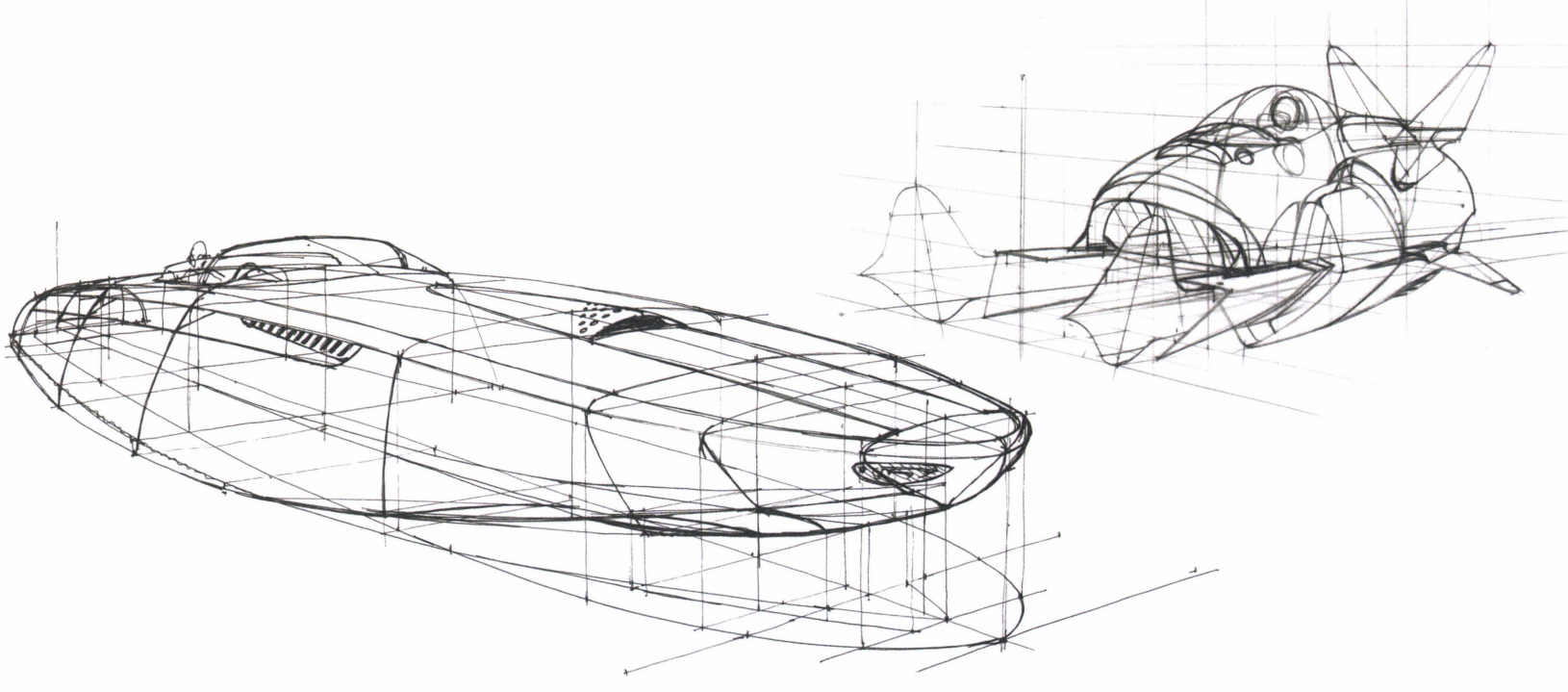

This perspective creates the most dynamic views, while not being too difficult to construct and control. Of the linear perspective grids, the 3-point perspective looks the most natural. This perspective is seen a lot in computer games and SketchUp uses it too. It is recommended to either estimate the convergence of the verticals or use a 3D program to create the grid. Accurate construction by hand can take a lot of time compared to generating it with a computer. One challenge with 3-point linear perspective is that it looks odd when the Horizon Line is crossed (see page 062). To put 3-point linear perspective to its best use keep the Horizon Line off the page or close to the top or bottom edge of the drawing.

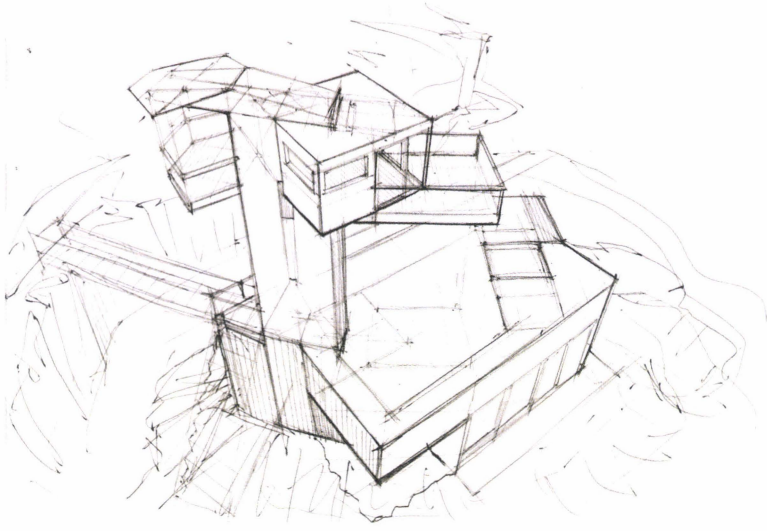

5-Point Perspective Drawings or Curvilinear Perspective

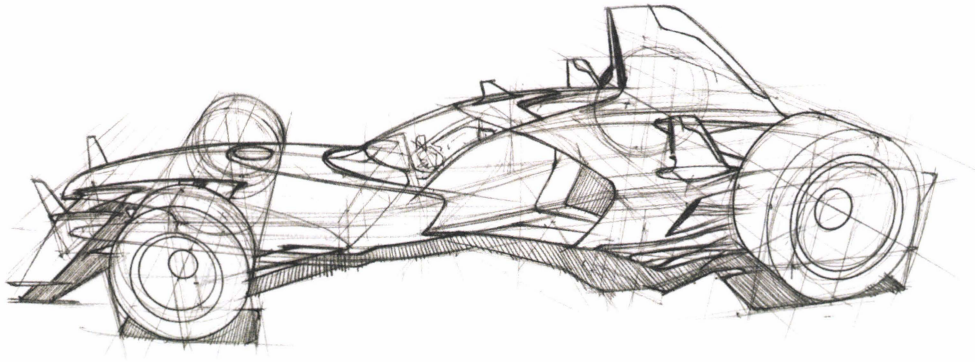

The 5-point perspective grid can be seen when looking at fish-eye-lens photography. This grid allows for drawing above and below the Horizon Line with coverging vertical lines. The curvilinear perspective can be found in many variations and strengths. To have a truly curvilinear perspective, all vertical and horizontal straight lines arch. It's a difficult grid to generate by hand so it's recommended to draw over a photograph, use an existing grid or use 3D software to generate a grid.

PERSPECTIVE GRID CONSTRUCTION

1-Point Grid Construction with Vanishing Points on the Page

This exercise will teach you to create a 1-point perspective grid of squares on the ground in the 60° Cone of Vision. The squares enable proportional transfers to be made from an orthographic plan into perspective. The goal for all grids is to find the correct convergence, and place squares in perspective upon that grid.

1. Establish the Center Vanishing Point, 60° Cone of Vision, 45° Vanishing Point and Picture Plane relative to the Station Point by applying the knowledge from the Perspective Terminology chapter.

Add a horizontal line through the CVP, and a perspective plane defining three sides of a square (red lines).

Draw the Line of Sight from the Station Point to the Center Vanishing Point.

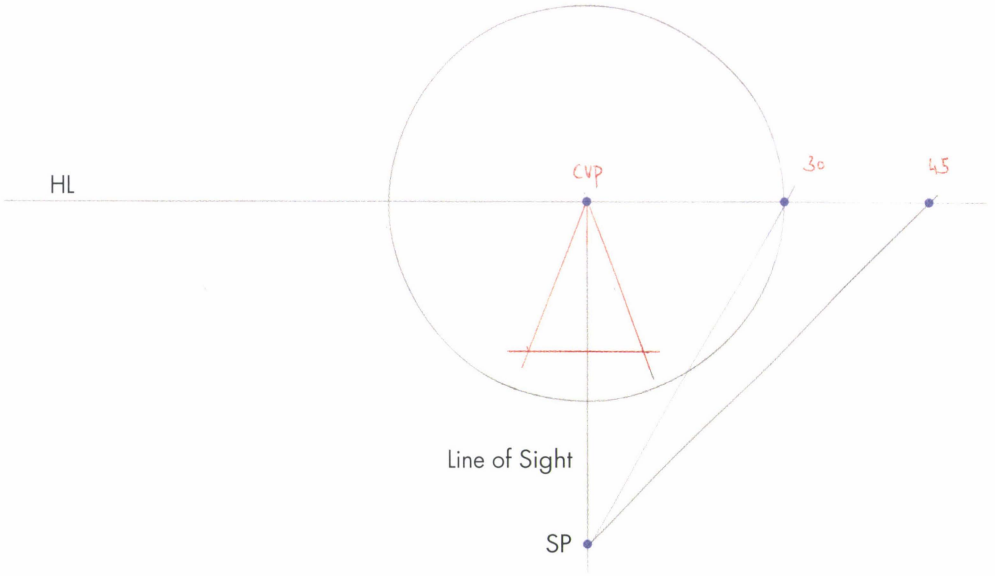

2. Since there is an established Cone of Vision and the length of one side of a square, there is only one solution to finding the length of the square that recedes into perspective.

Draw a line from point A to the 45° Vanishing Point.

The diagonal shows the length of the square in perspective.

In this case the 45° Vanishing Point is the Diagonal Vanishing Point for the 1-point perspective square.

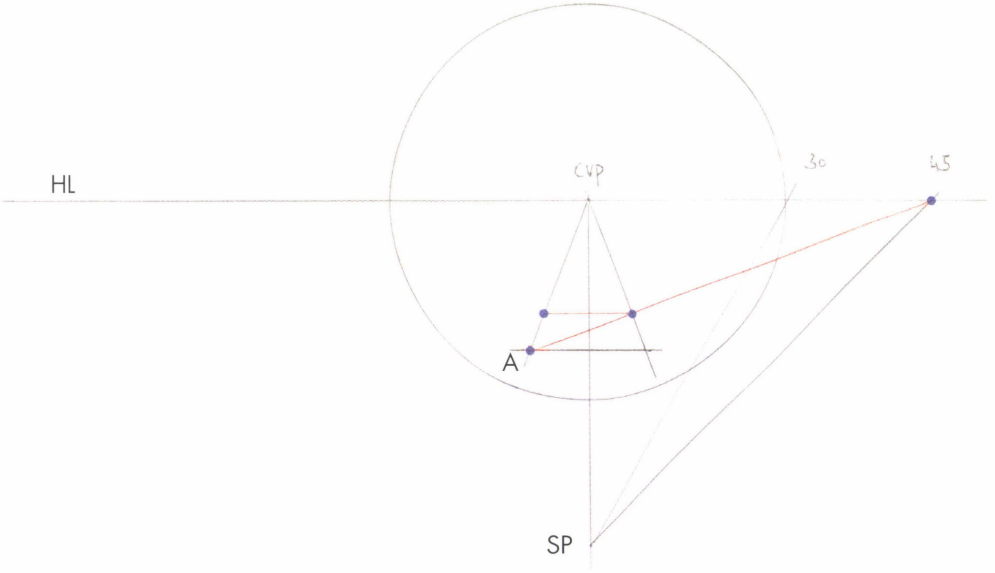

3. Now that the initial square is established, use the rectangle multiplication technique to create a grid on the ground. Build the grid out only as far as needed for the drawing; there is no point in filling the page with unnecessary squares.

This grid is now ready for use. There is an automatic foreshortening with this grid and it could be used for a street, product or interior. The size of the square could represent 50 feet or 5 inches. It's your choice.

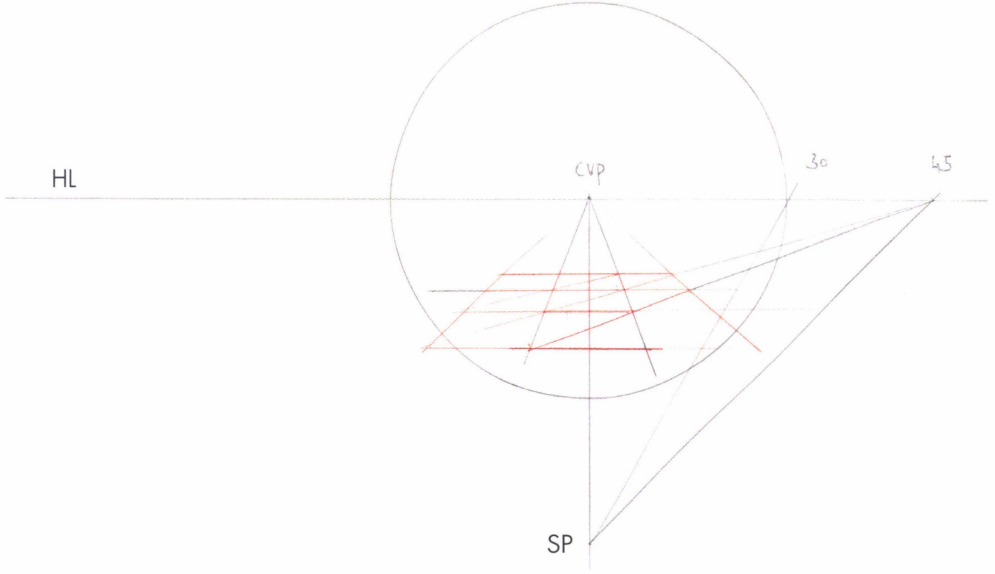

DIAGONAL VANISHING POINT (DVP), STATION POINT METHOD

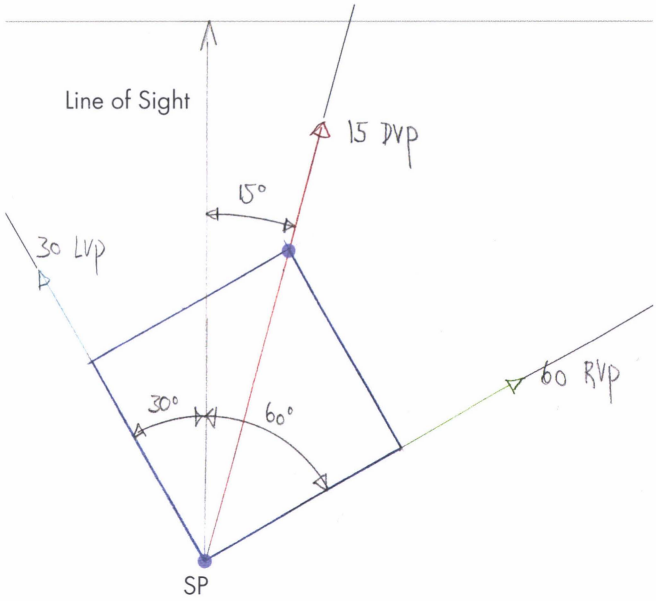

Top View:

Draw a square. Consider one corner to be the Station Point.

Draw a diagonal line from the SP through the opposite corner, which places a diagonal at 45° to the sides. This diagonal has its own Vanishing Point specific to the rotation of the square, which is called the Diagonal Vanishing Point (DVP). There is one for every rotation of the square.

To find the correct degree of the DVP, measure the angle between the diagonal and the Line of Sight. In this example, the diagonal line is converging to the 15° VP.

Perspective View:

Below is a square in a 30/60 perspective grid.

Draw a diagonal through two corners. Wherever that line intersects the Horizon Line determines the location of its DVP.

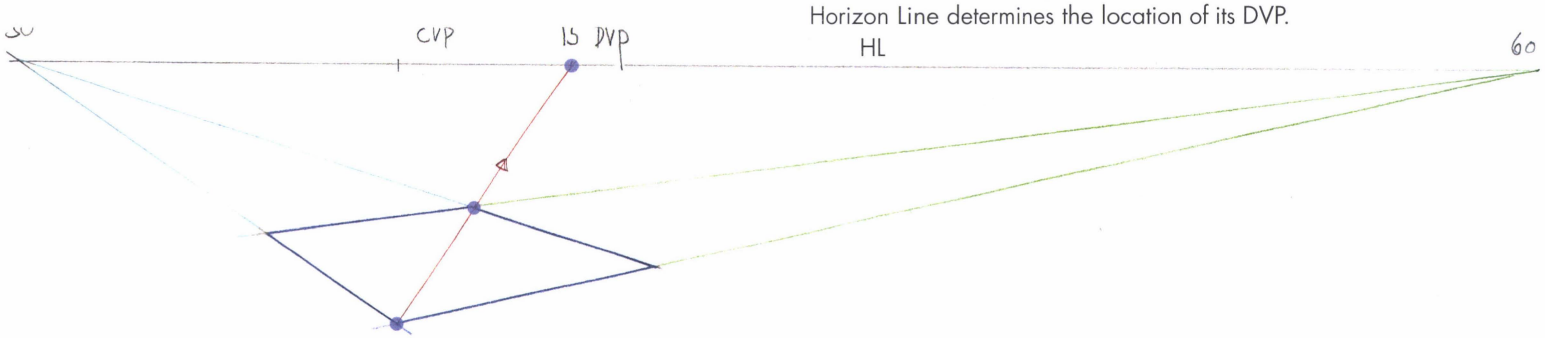

Estimating the rotation degree

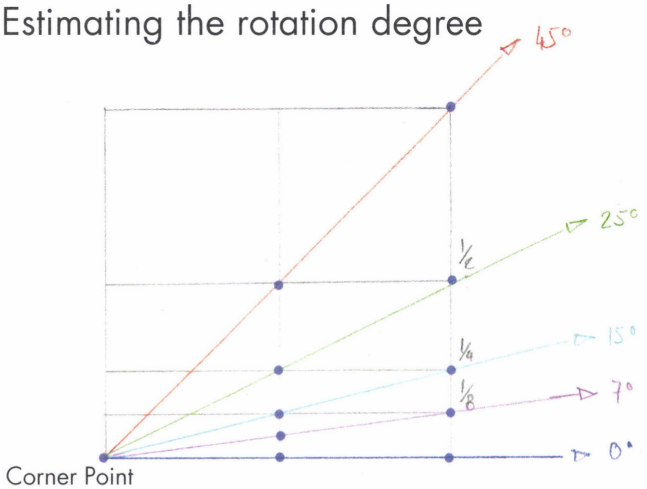

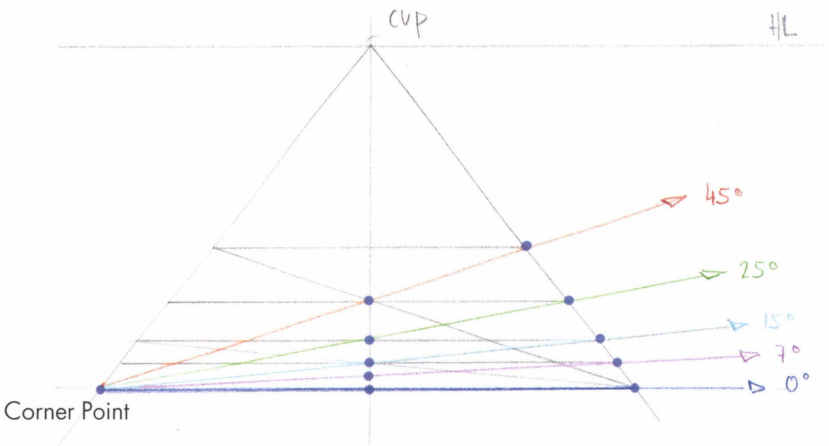

Dividing a square in perspective provides opportunities to create other rotations in addition to the Diagonal Vanishing Point. Take a look at the orthographic construction above. The right side of the square was subdivided multiple times to create 1/2, 1/4 and 1/8 marks by using the technique of dividing in half.

This technique's advantage is that it works in perspective as well. When the Corner Point connects to the diagonal corners it produces 5 radiating lines. The blue one is 0°, the purple 7° rotated from the blue line followed by rotations of 15°, 25° and 45°.

Use this technique to find angles in freehand drawings at 7° increments, which is precise enough for hand-drawn constructions.

2-POINT GRID CONSTRUCTION WITH VANISHING POINTS ON THE PAGE

Setting up a 2-point grid with squares is very similar to the 1-point grid. A 45/45 grid is being built in this example and the Center Vanishing Point becomes the Diagonal Vanishing Point.

1. Set up Vanishing Points and a 60° Cone of Vision via the Station Point.

Establish three sides of a base square (red lines). Two parallel lines are infinite and converge to the LVP. The end cap converges to the RVP and its length is defined by the distance between the two parallel lines.

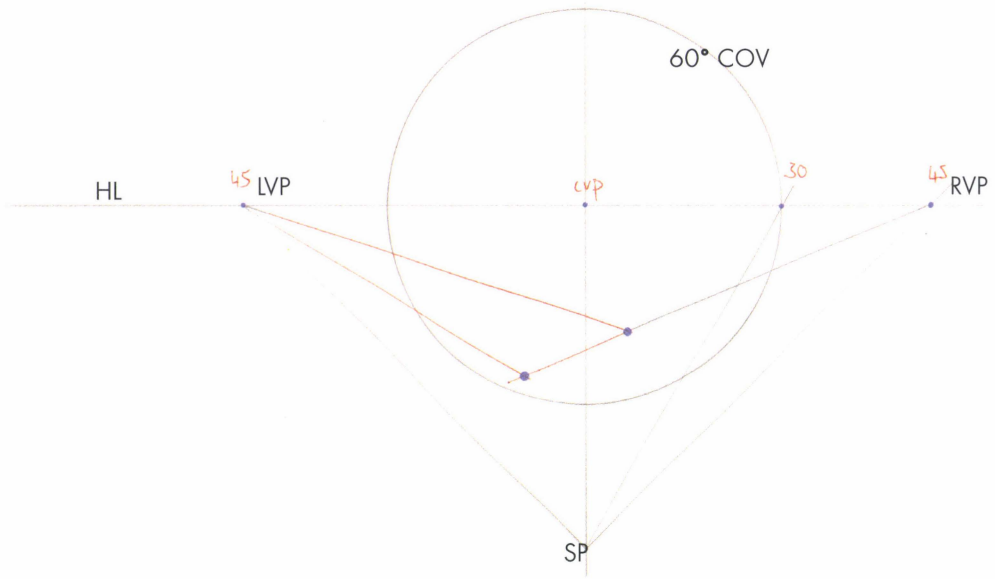

2. Find the size of the square by drawing a diagonal that runs toward the Diagonal Vanishing Point, which for a 45/45 grid is the Center Vanishing Point. The intersection shows where to draw the line toward the 45° Right Vanishing Point to complete the square.

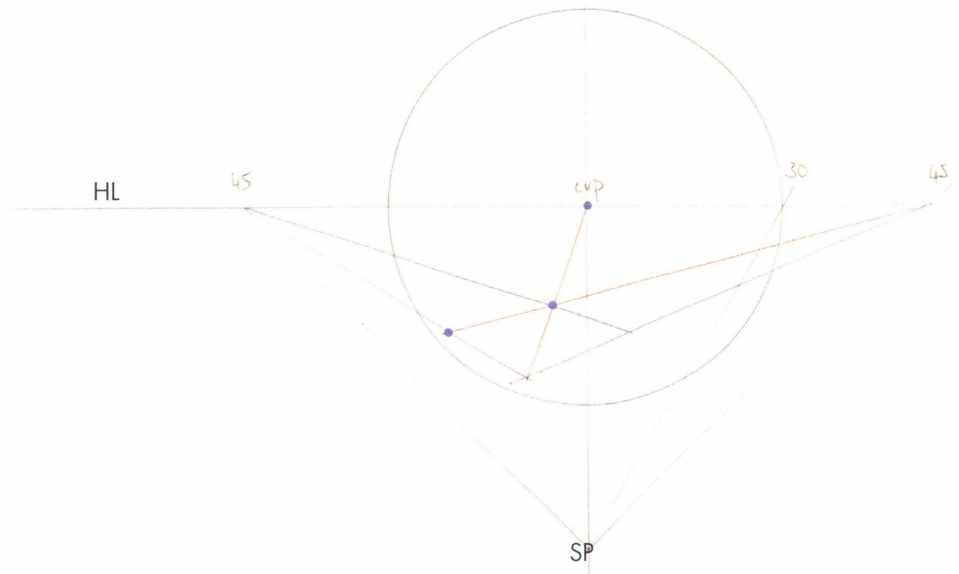

3. Complete the grid by using the rectangle multiplication method. Two grids have now been created in the same Cone of Vision. Be aware that the squares on each of the grids are not the same size, they are just squares.

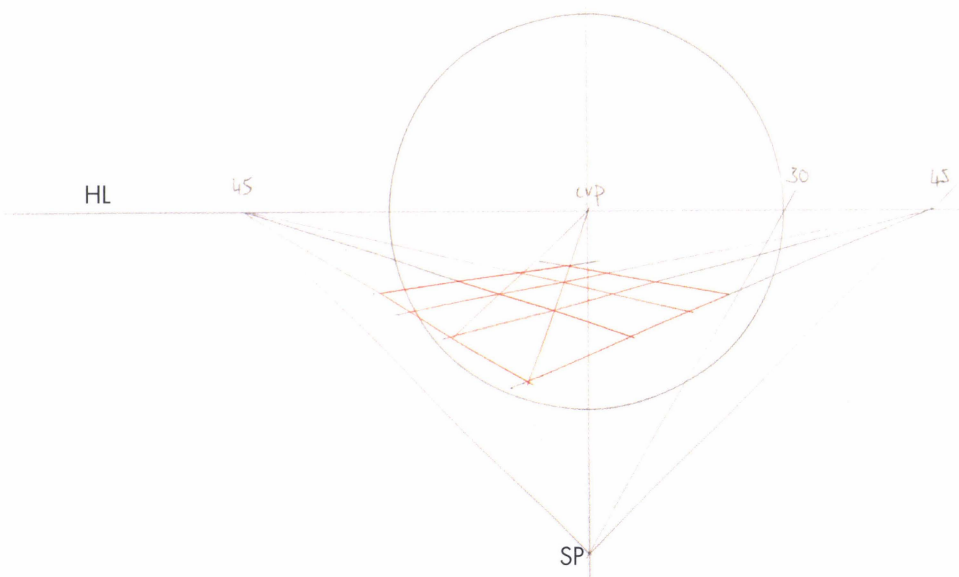

ROTATED 2-POINT GRIDS WITH SAME-SIZED SQUARES

Using the same size of square for each of the grids will make it possible to better estimate relative size. This technique is based on the idea that a circle is drawn in perspective and then a square is rotated around it.

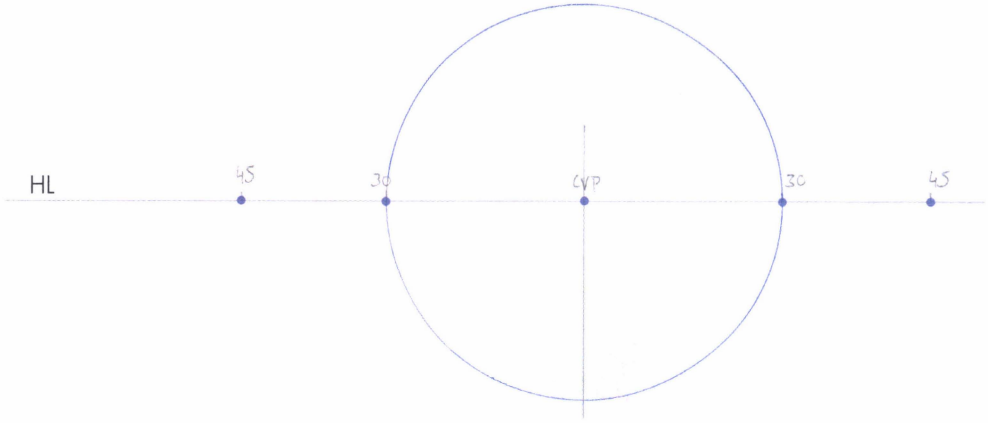

1. Set up the perspective based upon the Station Point projection for a set of Vanishing Points to be used for the rotation. A 1-point grid and a 60/30 are used for this example.

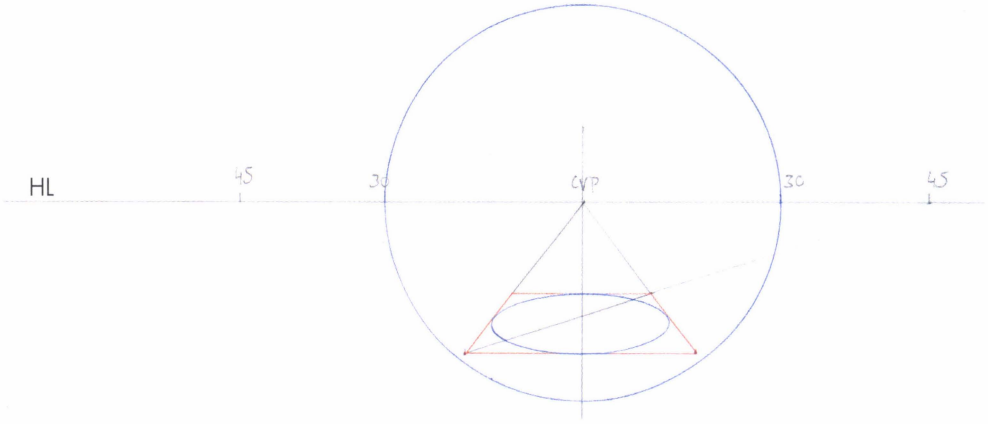

2. Choose and build a square in the 1-point perspective grid as done earlier. Now place an ellipse inside this square. The minor axis of the ellipse will point straight down. Make sure that the ellipse fits the square perfectly.

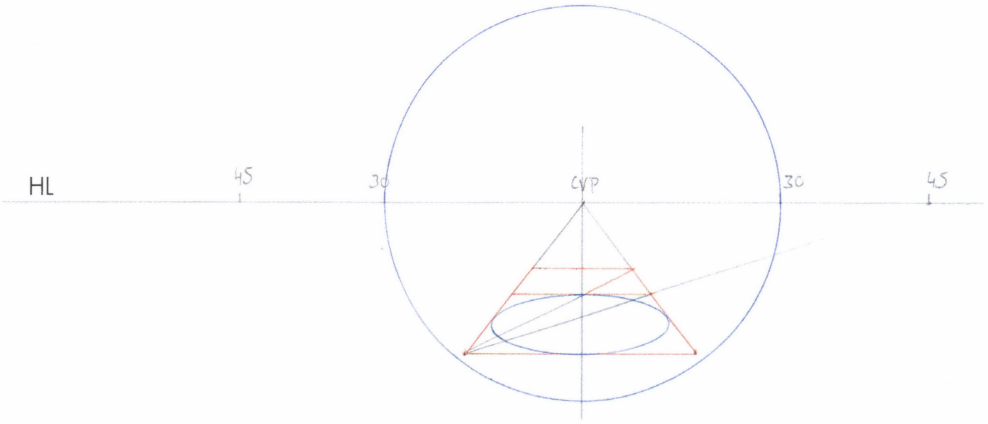

3. Now expand the grid as much as needed. Only one additional square was added to this construction.

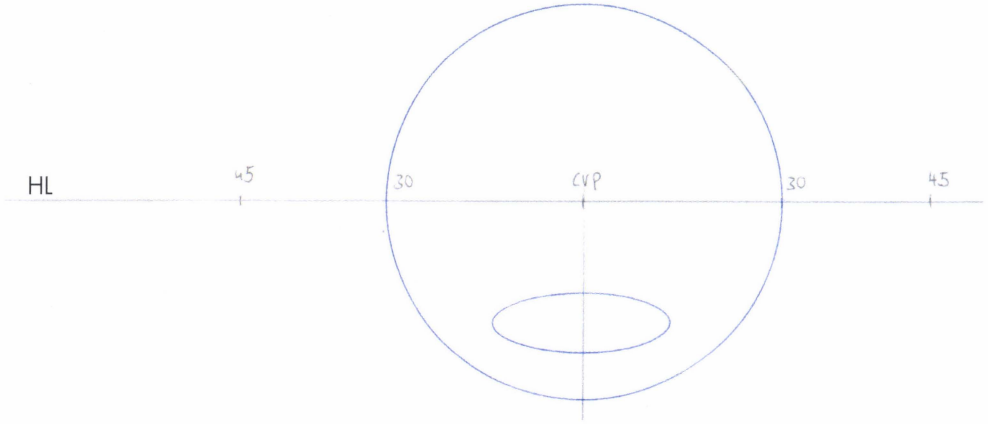

4. Trace the ellipse, the Cone of Vision and the Vanishing Points on an overlay. For this technique to work, these elements must be traced precisely. If the size of the overall grid ever needs to change, make sure to enlarge all of the elements at the same ratio. For example, scan it into the computer and enlarge or reduce it as needed.

5. Create a square around the ellipse with the 60/30 Vanishing Points by drawing a line that is tangent to the circle on the ground. This will result in a rotated square that has exactly the same size as the one in the 1-point perspective.

Expand the grid as needed. In this example, the square was multiplied only once.

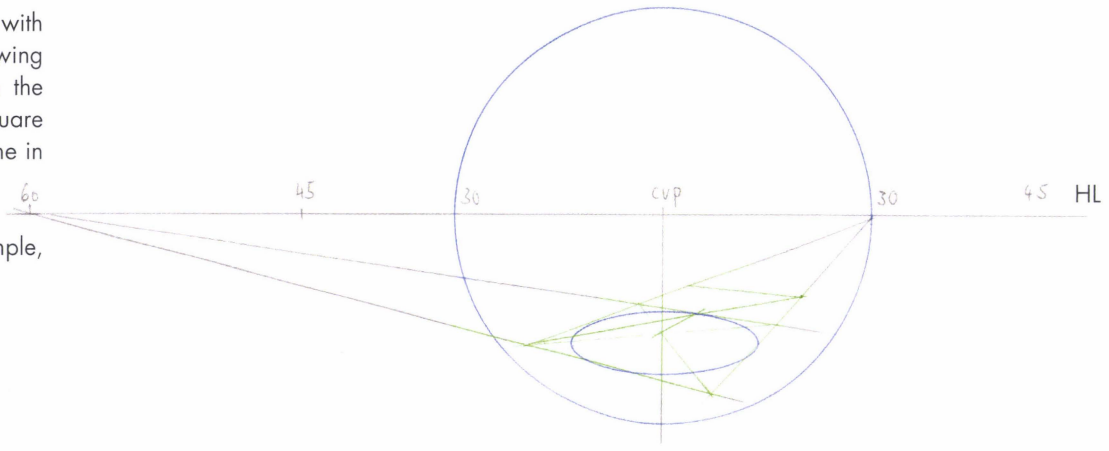

6. The two grids can be combined now. Line up the Horizon Line and the Cone of Vision precisely in the same position. These grids together allow for drawing objects that are rotated against one another on the same ground plane.

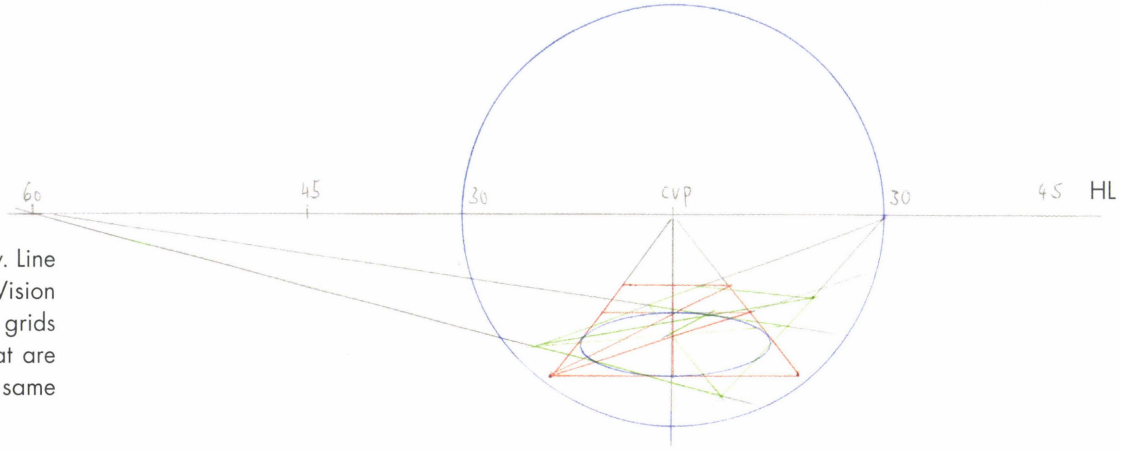

7. By using these two grids, two boxes are placed on the same ground plane. They have the same footprint and height. With the availability of same-sized squares on the ground this becomes a quick construction.

Read the next page to learn how the height of the box was transferred.

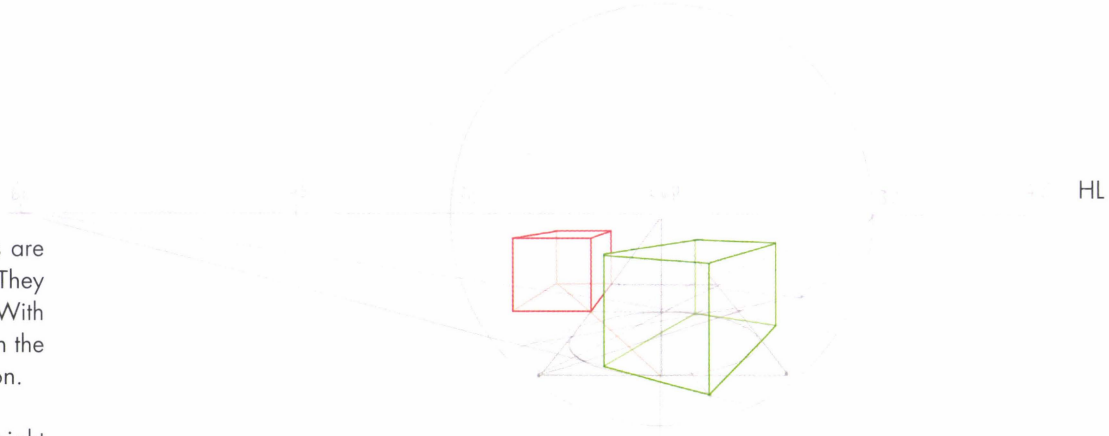

8. Add more overlays to find more grids to rotate around the circle. Make sure that the Cone of Vision and Horizon Line are matching and that each grid is on a different piece of paper. They can be slipped under the page to trace over as needed.

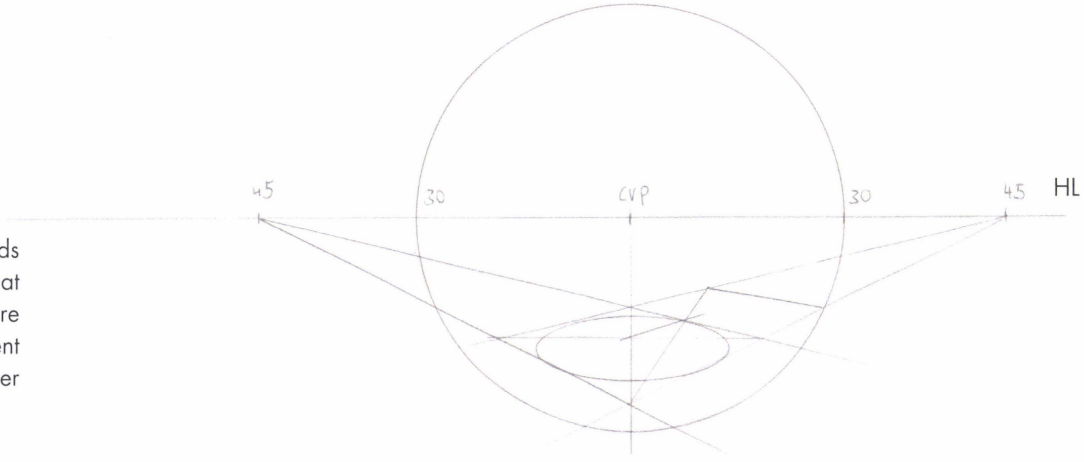

TRANSFERRING SCALE IN PERSPECTIVE

Transferring the height of something in perspective is one of the simplest constructions, but too often it's done poorly. Never again! This section explains how to use a simple Reference Point (RP) to scale a figure from the foreground back into the distance.

In the first example the figure stands on flat ground. In the second example as the figure is scaled back into the distance he stands in a hole and then on top of a box.

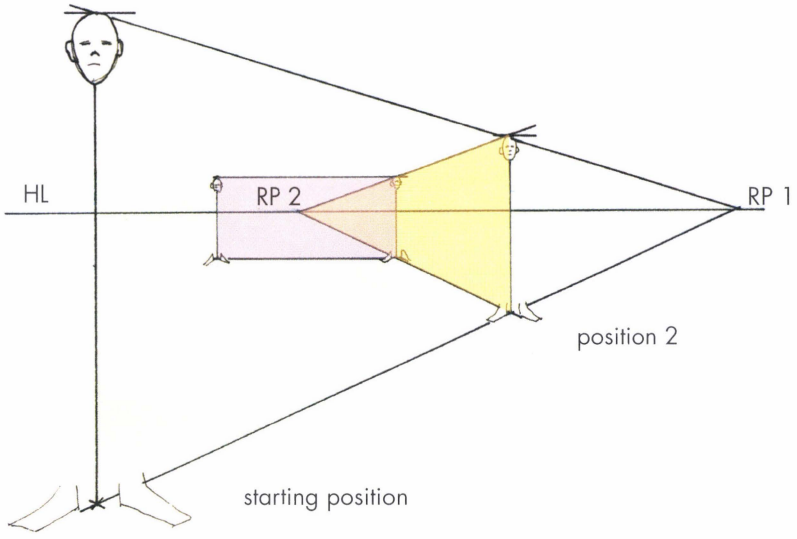

1. To transfer the height of any object as it moves around on a ground plane in perspective, draw a line from the base of the object, in the direction it will be moving, all the way to the Horizon Line (HL). This creates a Reference Point (RP1).

2. Draw a line from the height of the object to RP1.

3. Draw a vertical line anywhere that intersects both reference height lines. It will be the same height in perspective at that point.

4. To move the figure even further away repeat the above steps, creating RP 2.

5. To move the figure left or right just draw height lines parallel to the horizon from any figure position at all.

Standing on a box in the distance

1. Construct the height planes from the top of the figure to RP1, across the top of the hole and through the box.
2. Decide where the figure should be standing in the top view of the box, and locate this point on the ground plane.
3. Transfer this point location straight up to the top of the box.
4. Take the height of the figure standing on the ground plane at this position and transfer it up to standing on top of the box. Since the vertical lines are parallel in this case there is no need to worry about any vertical foreshortening.

Standing in a hole in the distance

1. Find the figure's height directly above the side wall where it intersects with the RP1 ground line.
2. Transfer its height up from the bottom of the hole. Make it the same height as the line from the ground plane (green line).
3. To move the figure around in the bottom of the hole just repeat the same steps as the above example to create RP2. The only difference now is that the bottom of the hole is the construction ground plane for this figure as was the top of the box for the figure standing on it. Now go ahead and draw that marching band on the football field you've always wanted to do.

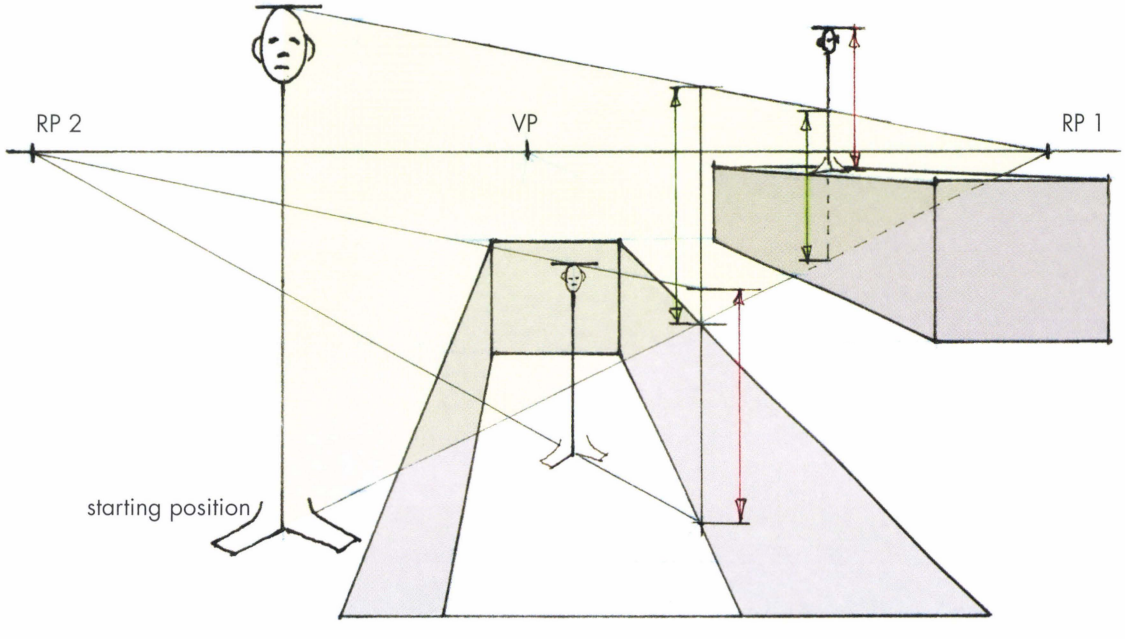

THE BREWER METHOD:
CONSTRUCTING A GRID WITH VANISHING POINTS OFF THE PAGE

As we create drawings, sometimes the Vanishing Points are off the page. Constructing a grid with the Vanishing Points off the page is possible without having a computer, a giant piece of paper or a photocopier, thanks to the Brewer Method. It's named after Bill Brewer, one of our teachers at Art Center College of Design, who originally taught us this method.

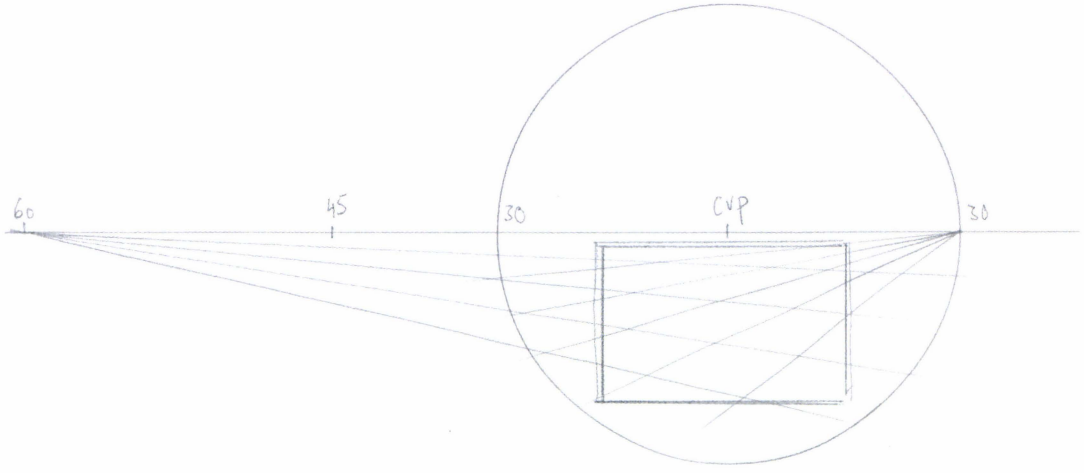

2-Point Grid using 4 establishing lines - The Brewer Method

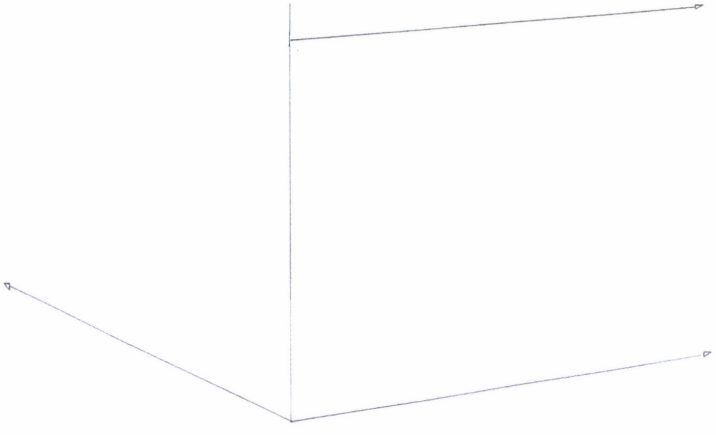

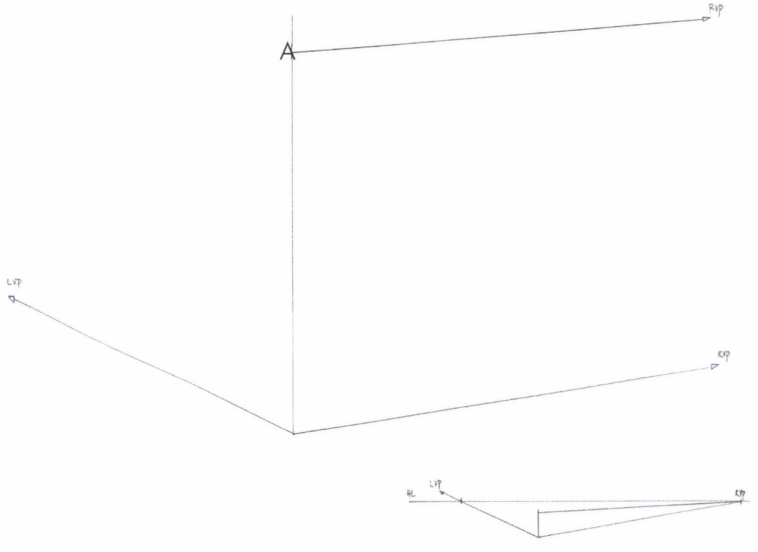

To establish a grid, four basic lines are needed.

1. Draw a vertical line. Think of it as the front corner of a box.

2. Draw two lines that converge toward the right. Make sure that they converge off the page. Avoid parallel lines in this case. These two lines will establish the Right Vanishing Point and the position of the Horizon Line.

How much should the lines converge? It depends on what view is being created. Feel free to consult a reference image or photograph with a desirable perspective and trace the lines.

3. Draw a line from the bottom of the vertical line toward the Left Vanishing Point.

Take a look at the small sketch above. A perspective was established with the four lines placed on the page. Imagine if the lines to the right cross somewhere off the page at the Right Vanishing Point. The RVP establishes the position of the Horizon Line. The HL and the left line also would intersect somewhere off the page. Where they intersect is the missing Left Vanishing Point.

The goal of the next few steps is to draw a line from point A to the Left Vanishing Point that is off the page, without extending the page. The small sketches will be kept on the bottom of each step to observe the process showing the entire grid.

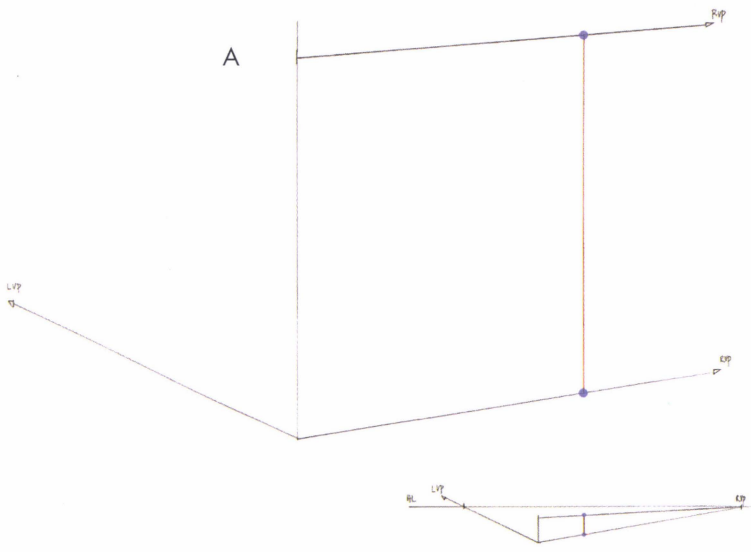

4. Draw a vertical line parallel to the existing vertical. Increase the precision of the drawing by keeping these lines as far apart as possible.

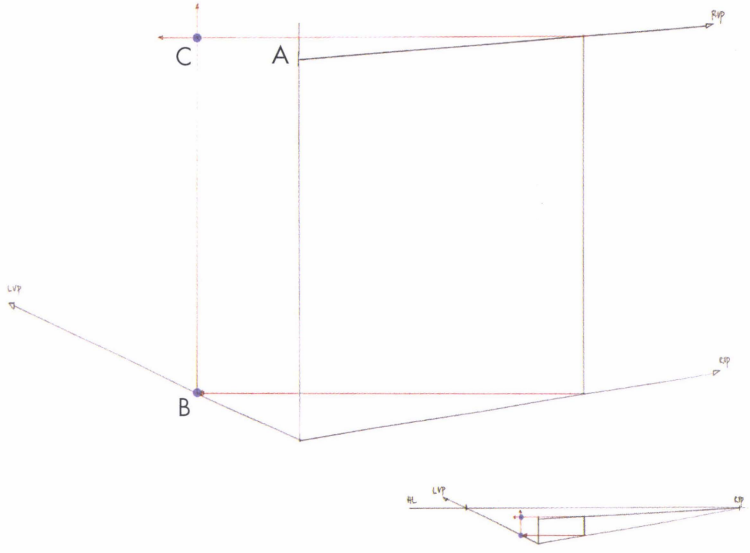

5. Draw a rectangle with perfect 90° corners (red lines) starting from the height of the right vertical line. Where the bottom of the rectangle intersects the line going to the LVP (point B), draw a vertical which creates point C.

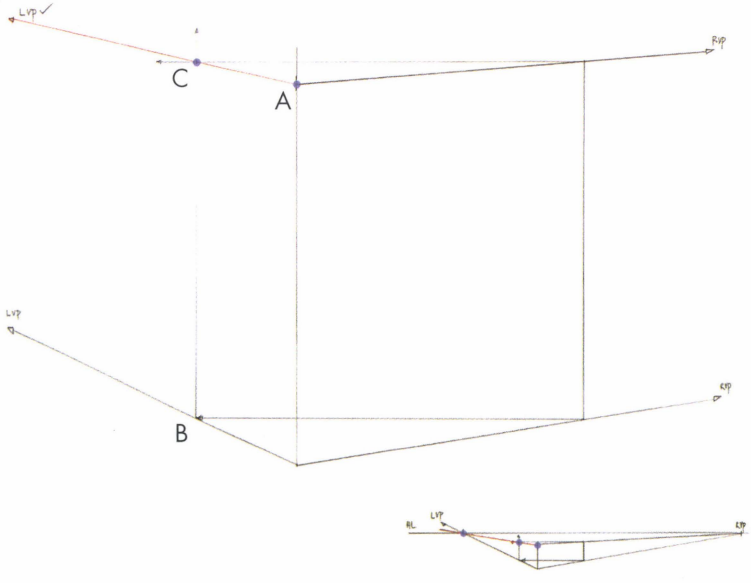

6. Draw a line from point A through point C until the edge of the page is reached. The small drawing shows that this line would eventually hit the Left Vanishing Point.

Now that this perspective has been established more grid lines are needed to make this grid useful.

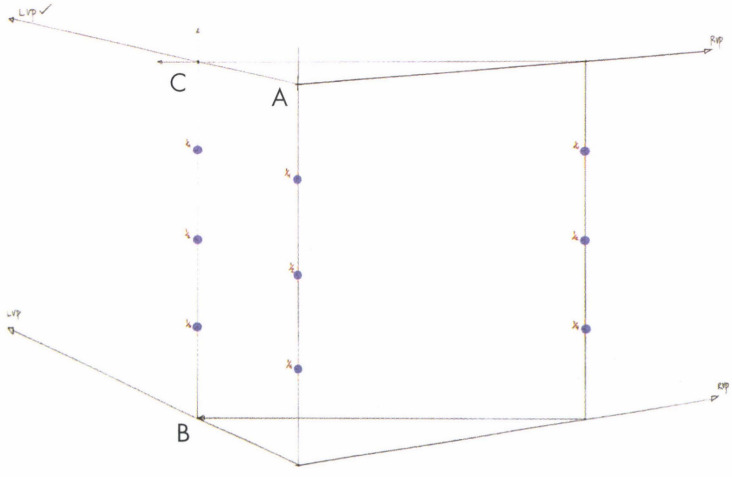

7. Divide all three vertical lines evenly.

In this example they are divided into quarters, however there is the option of more subdivisions. To do this, measure using a ruler or an equal spacing divider tool.

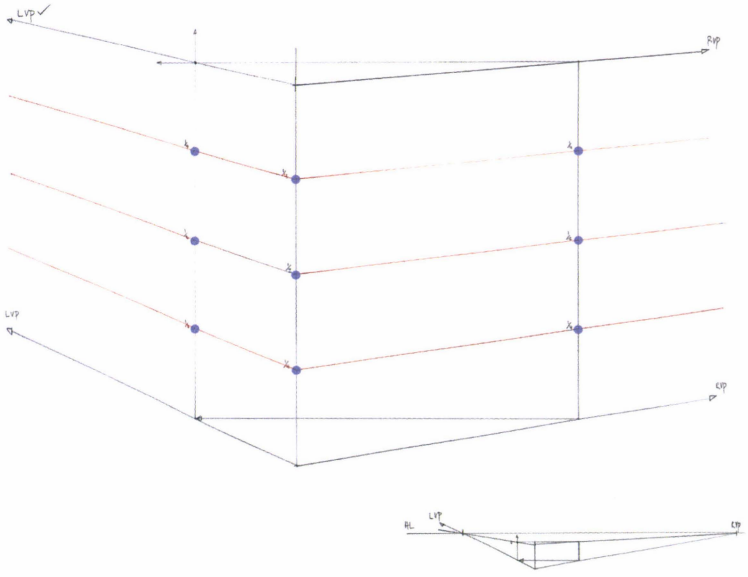

8. Draw a line from each subdivision point on the center vertical line, through its corresponding point on each of the other vertical lines, toward the edge of the paper.

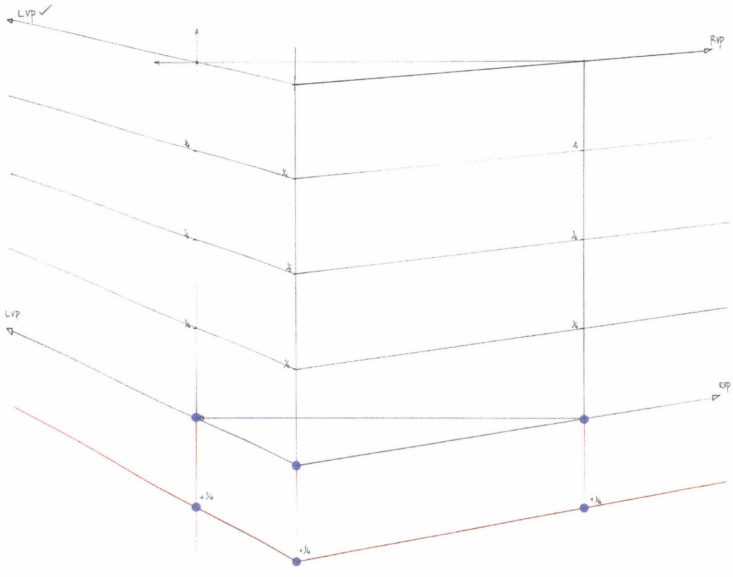

9. Extending the grid is simple. If there is room toward the lower edge of the page, take one grid-unit height of each of the verticals and add it to the bottom. Connect the new points as in step 8.

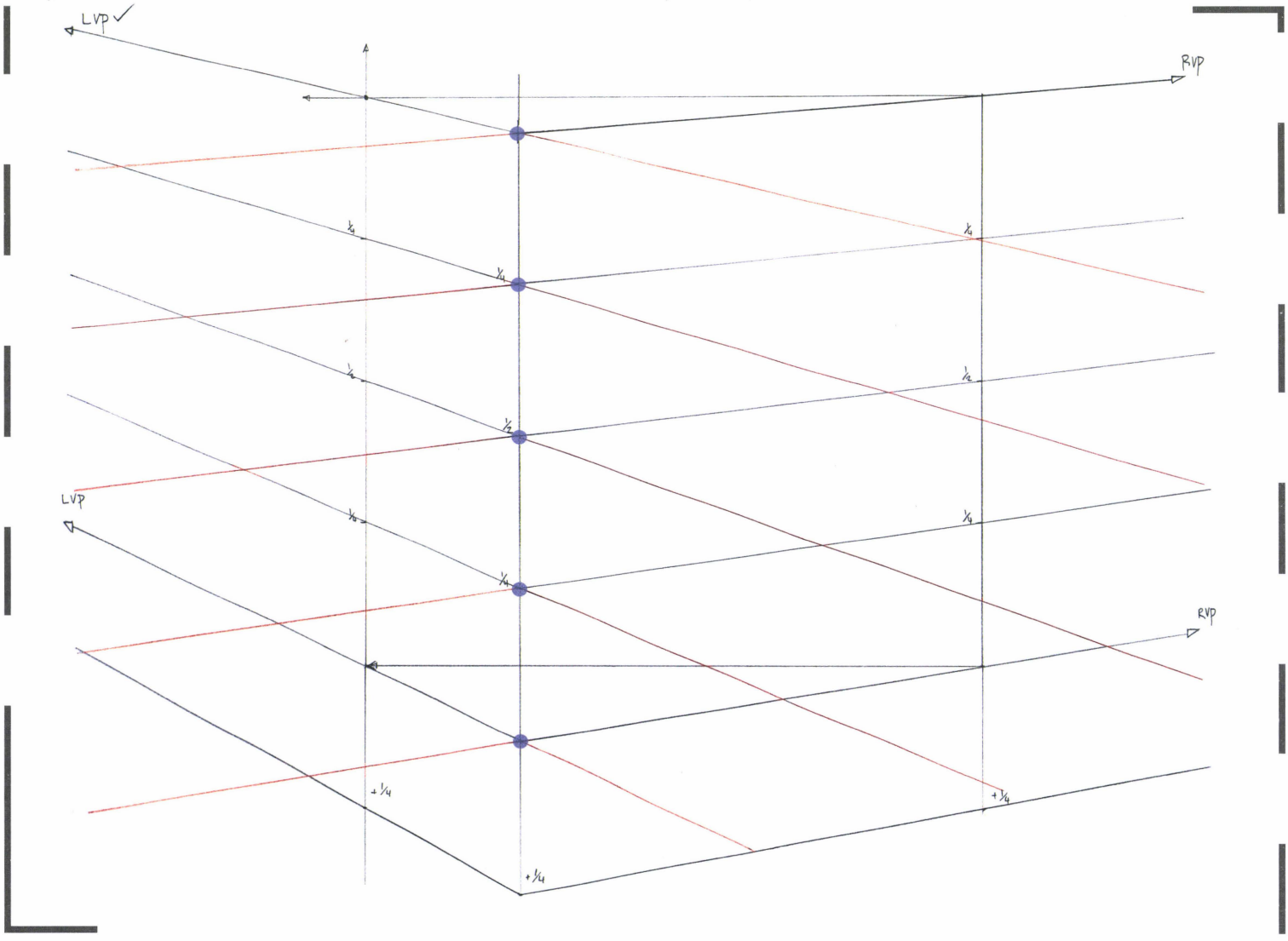

10. The last step is to extend all the lines that lead to the Vanishing Points. This creates the final grid that can be used under future drawings.

Make a few different grids that can be deployed as applicable. Use these grids as underlays and do not draw directly on them. This will allow for multiple uses of each grid.

CREATING A GRID OF SQUARES, WITHOUT DIAGONAL VANISHING POINTS

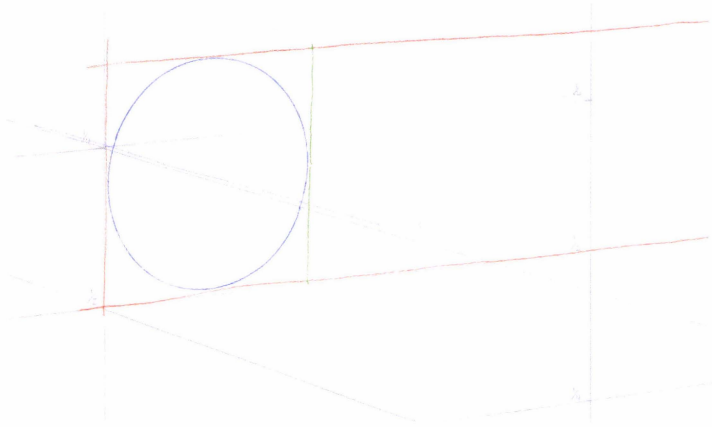

1. Use the grid that was just created as an underlay.

2. Place the correct ellipse into the bounding area (red lines).

3. Close it with a vertical tangent line (green line).

This creates a square in perspective that matches the current Brewer Grid.

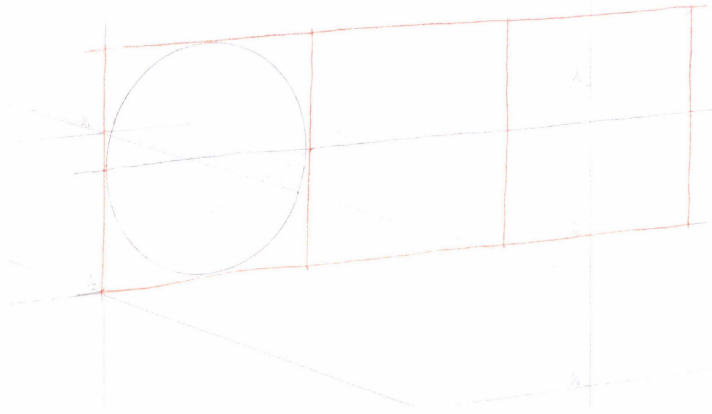

4. Extend the squares with the rectangle multiplication technique.

This makes a vertical plane with 3 squares. Any square can be expanded in either the Y (height) or Z (length) direction.

These squares enable orthographic transfer and provide control over the drawing proportions of future objects.

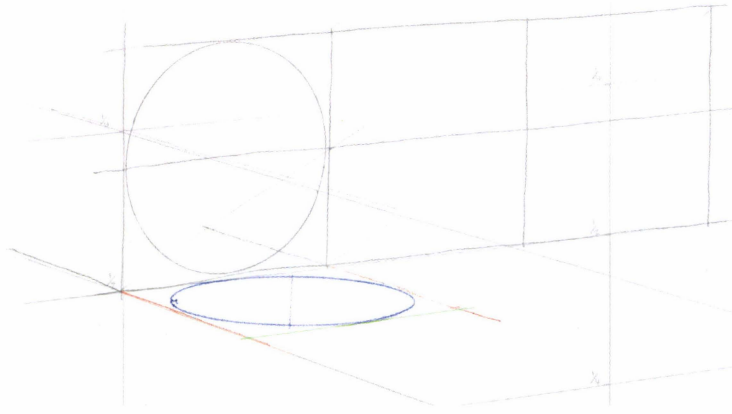

5. Transfer one square to the ground plane. The starting point and width are already provided via the vertical square.

6. Place an ellipse on the ground plane and cap the square with a tangent line, (green line).

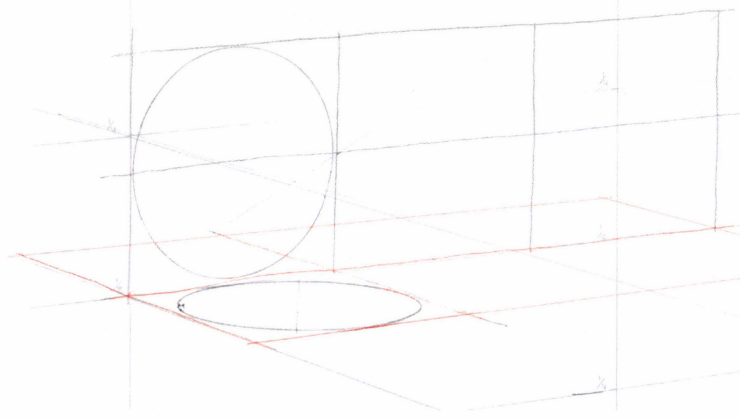

7. Expand the grid again. Mirror the square across the X-axis (width) to make a symmetrical grid.

These grids are the foundation of most object drawings. Feel free to make a copy of any grid in this book to use as an underlay for future drawings.

WHEN TO USE A COMPUTER-GENERATED UNDERLAY

Some of most significant advancements in perspective drawing are 3D modeling programs that can aid in the basic layout of perspective-drawing grids and larger volumes. Why not then have the computer do it all? In order to use these computer programs efficiently and effectively, it's important to learn how to construct hand-drawn grids and volumes first. This combination of 2D and 3D tools can be very powerful to create awesome drawings.

One of the most tedious parts of starting a new drawing is laying out the perspective grid with the larger volumes blocked-in proportionally. It's tempting to rush this step, but it is important to make the foundation of the drawing as accurate as possible. For purely hand-drawn grids, the POV often doesn't come out exactly as desired, or the amount of convergence is off and emulates the wrong camera lens. In that case you either carry on with the wrong POV, or start over.

A 3D computer program is fantastic for quickly blocking out proportions of the large volumes, moving the POV around, and even trying different camera lenses before committing to doing section surfacing and detailing. However, when starting to use these types of programs, don't forget that you have drawing skills! It's easy to get sucked into modeling more than is needed, and to get carried away adding details or more complex forms that would be faster and easier just to draw. Hours can be spent messing around on the computer when all that was really needed was one good 3/4 view to get started.

Like anything, using a new tool takes practice. The examples on the following pages were done by some of our former students at Art Center College of Design. All of these artists are now working professionals.

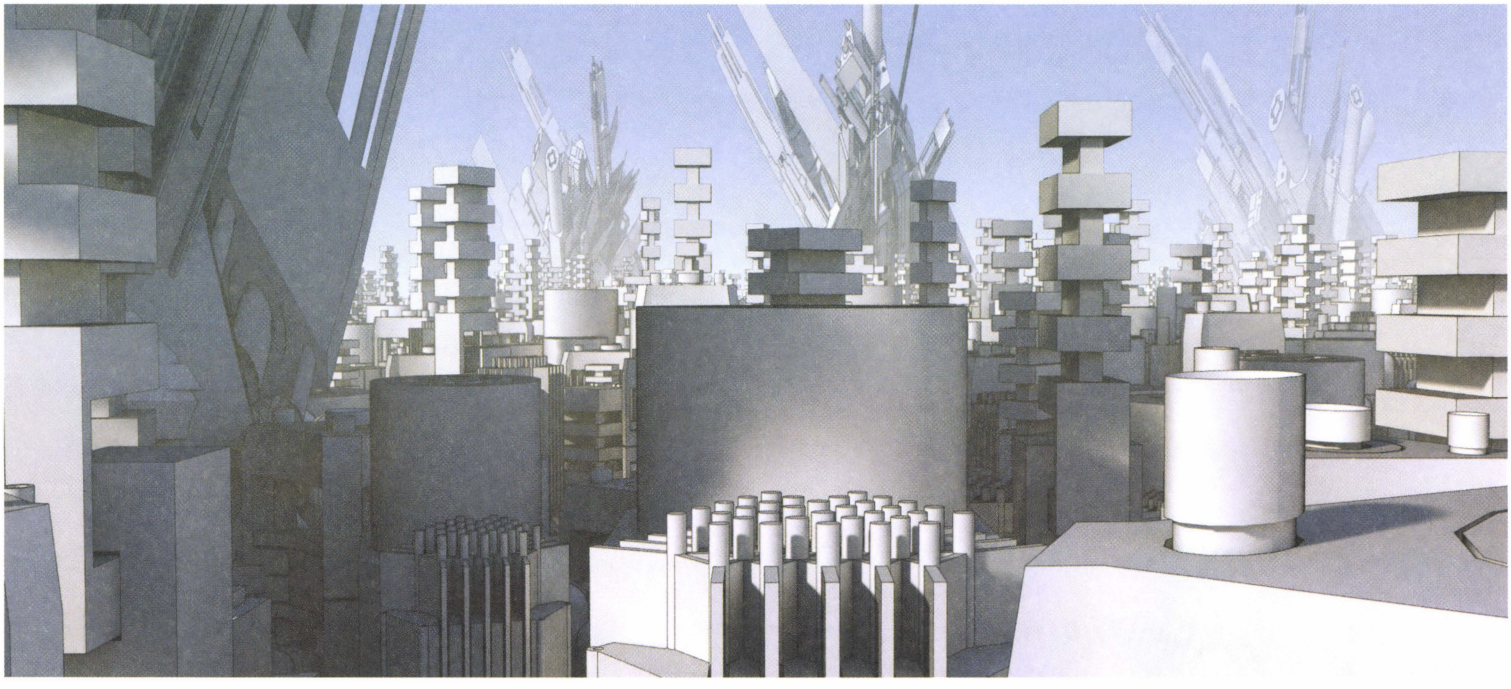

Above is a cityscape underlay modeled and rendered in MODO. The total time to model and render this image was 30 minutes, so the production advantages of working this way to get started are immediately evident. On the facing page (top), Mark Castanon built a 3D underlay of an interior scene in SketchUp, which is probably the simplest and least expensive of the 3D modeling and rendering programs with enough features to make it worthwhile to learn and use. Below is what he drew over the top of that underlay. This is a great example of modeling just enough of what is needed to establish a POV, proportions and a perspective grid before jumping into the final drawing. The amount of detail in the hand drawing, along with the varying line weights used to accentuate the overlapping objects in the scene and their respective silhouettes, makes this drawing more visually appealing than had the top image been finished only in the computer.

View more of Mark's fine work at:
http://markcastanonportfolio.blogspot.com

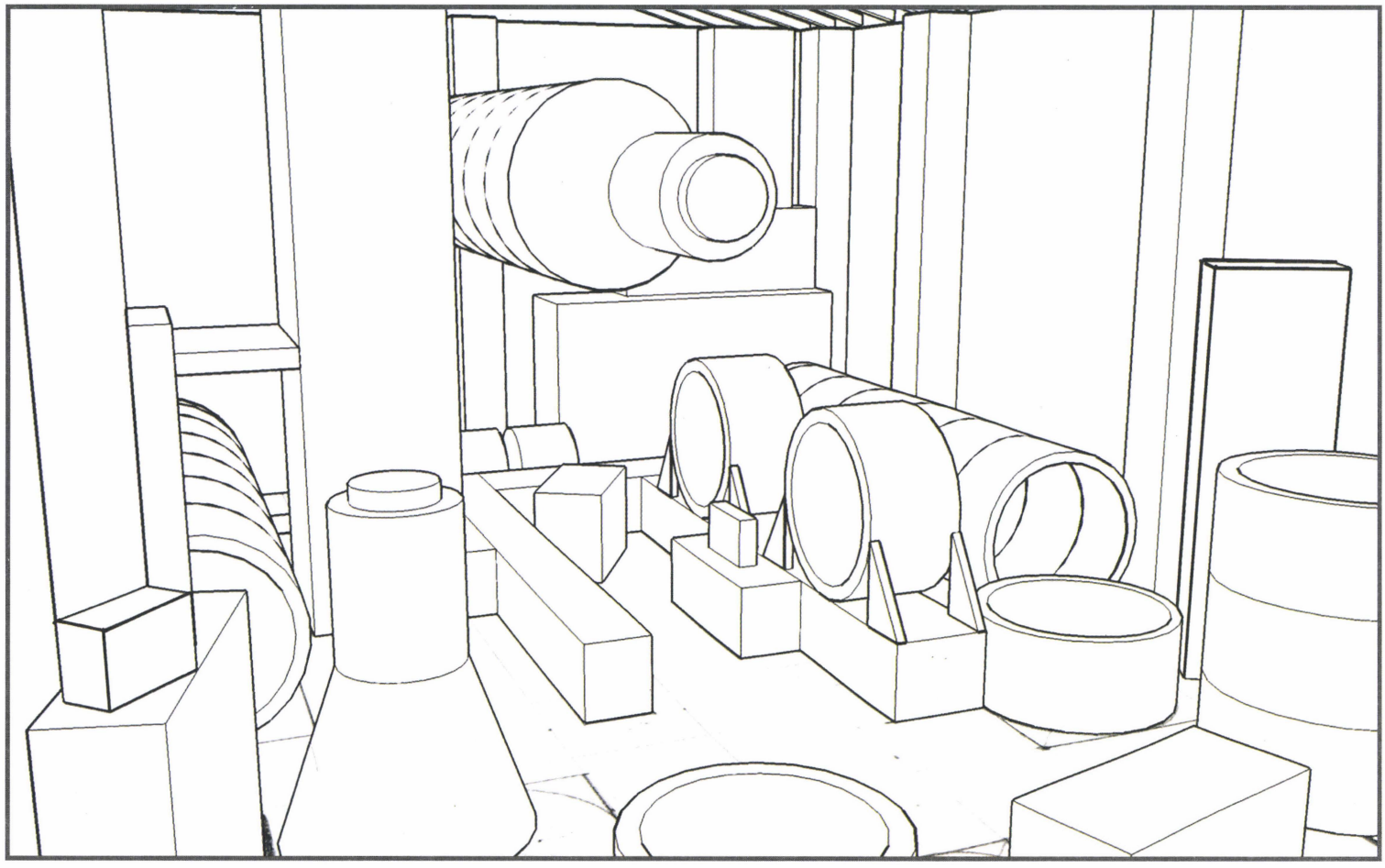

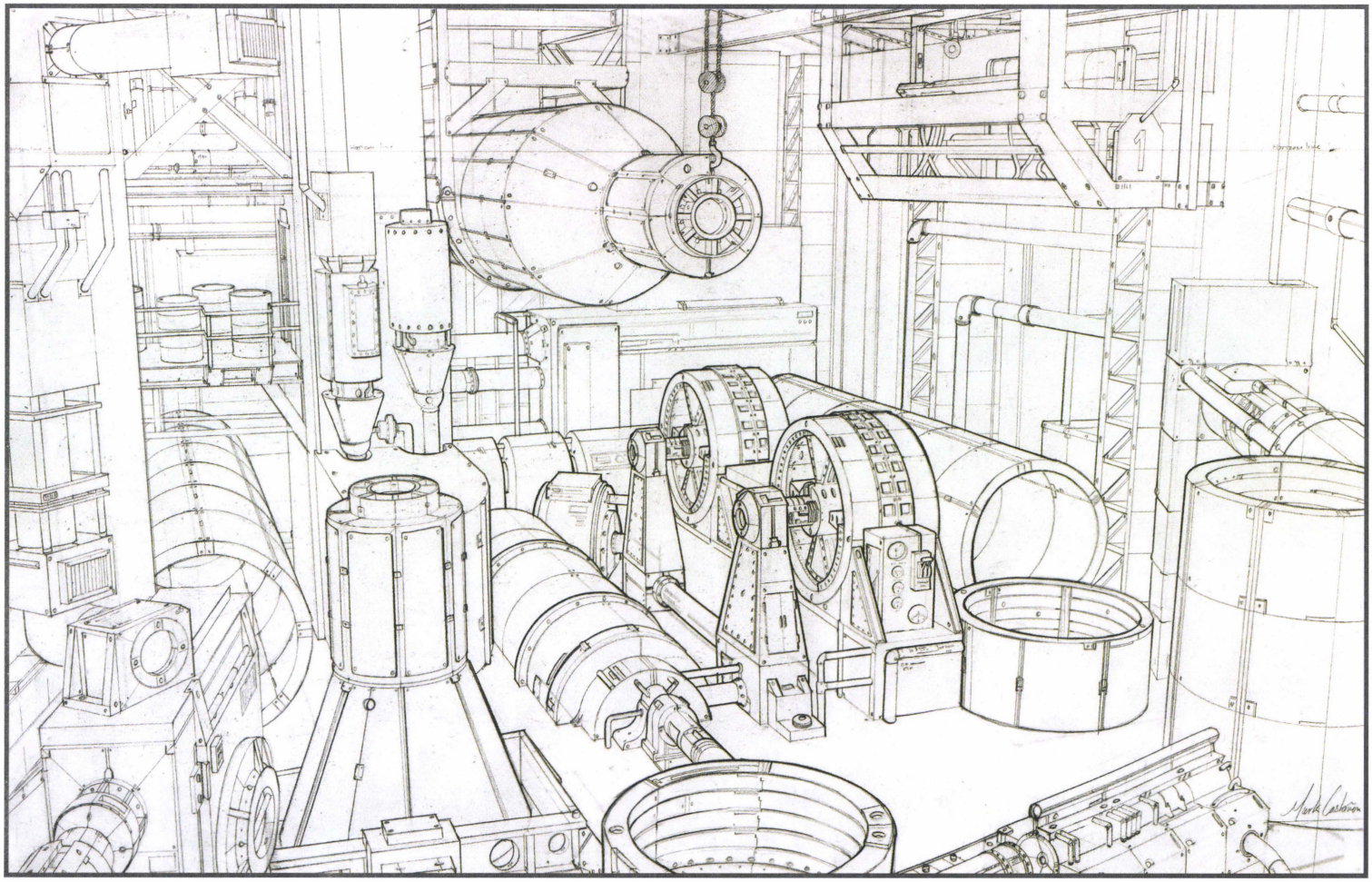

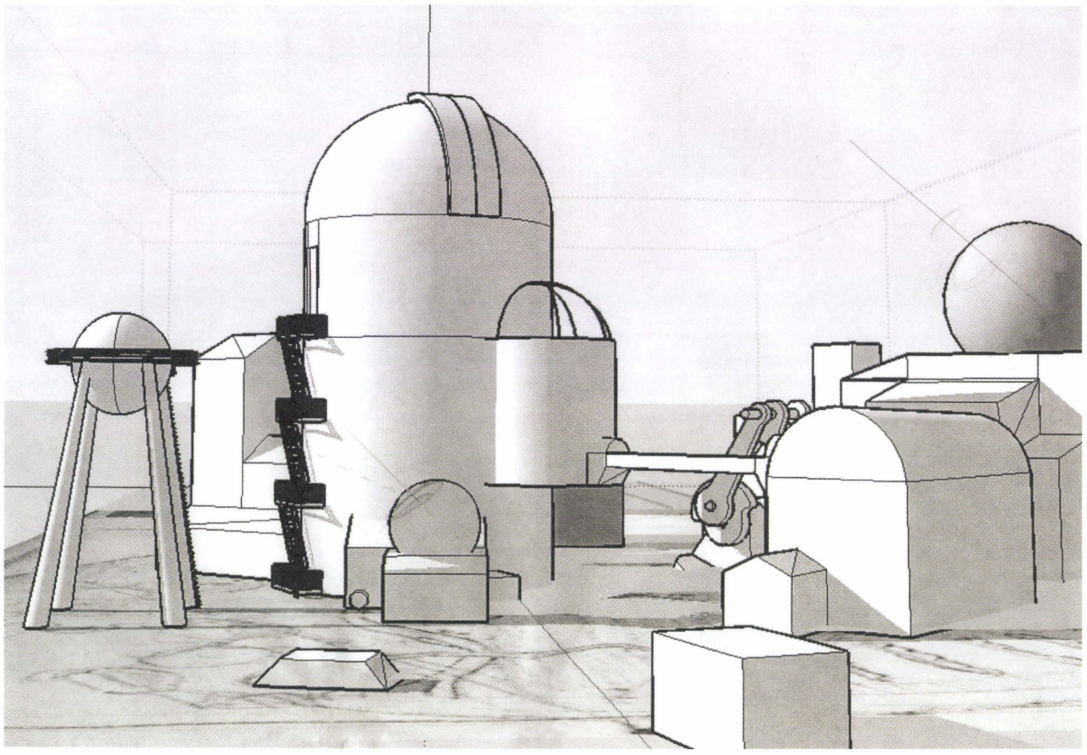

Rustam Hasanov built the SketchUp model to the right and then did the overlay drawing below. Again, only a minimum amount of computer modeling was needed to rough out the scene before sketching over the top of it. When drawing over a computer underlay, it's easy to extend the guidelines from the underlay information and reposition elements, as well as add new ones. By varying the line weight, Rustam did a great job of helping the eye better understand the shapes in the scene.

View more of Rustam's nice work at:
http://cargocollective.com/rustamhasanov

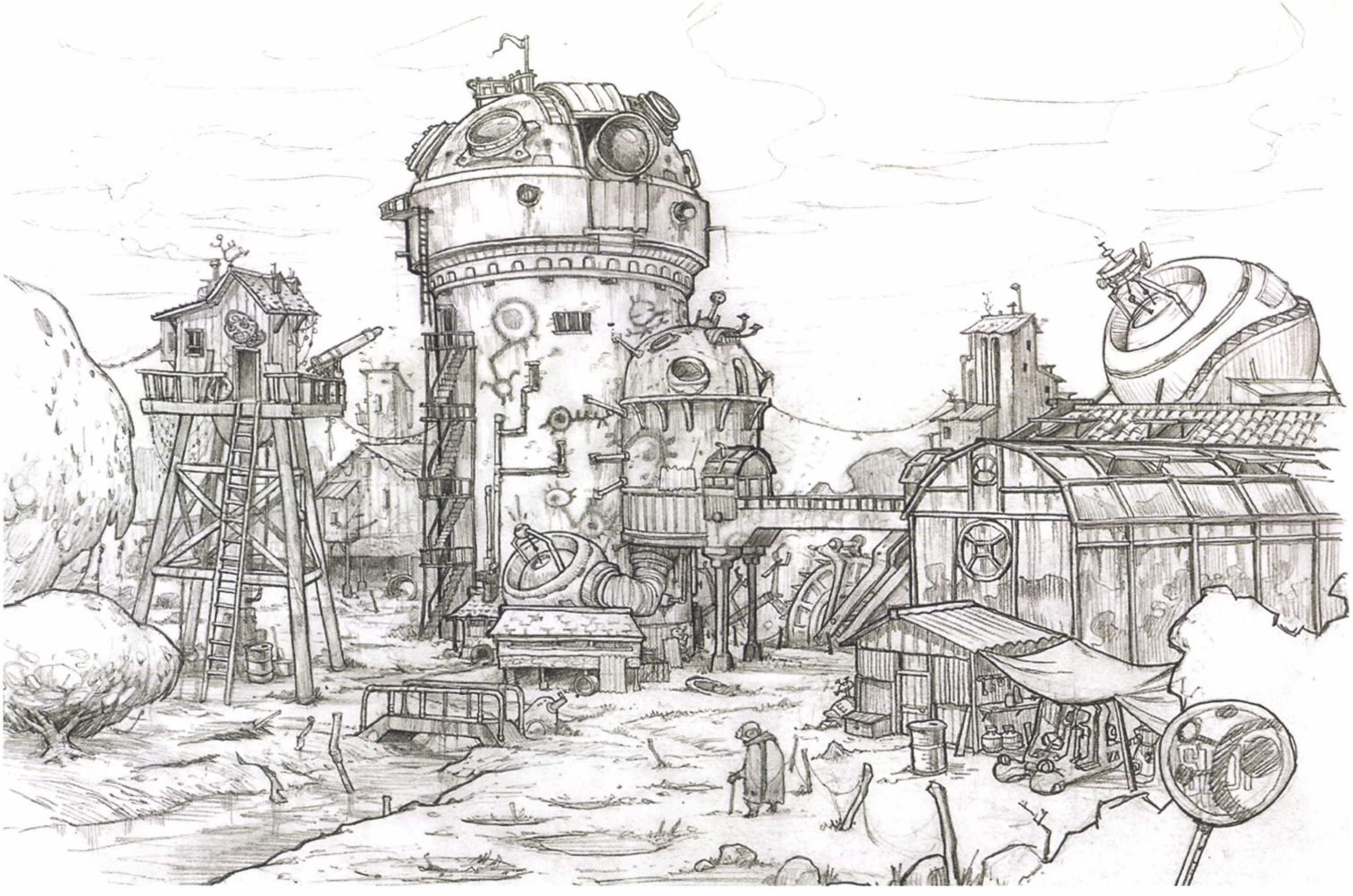

OTHER BENEFITS AND WAYS TO USE AN UNDERLAY

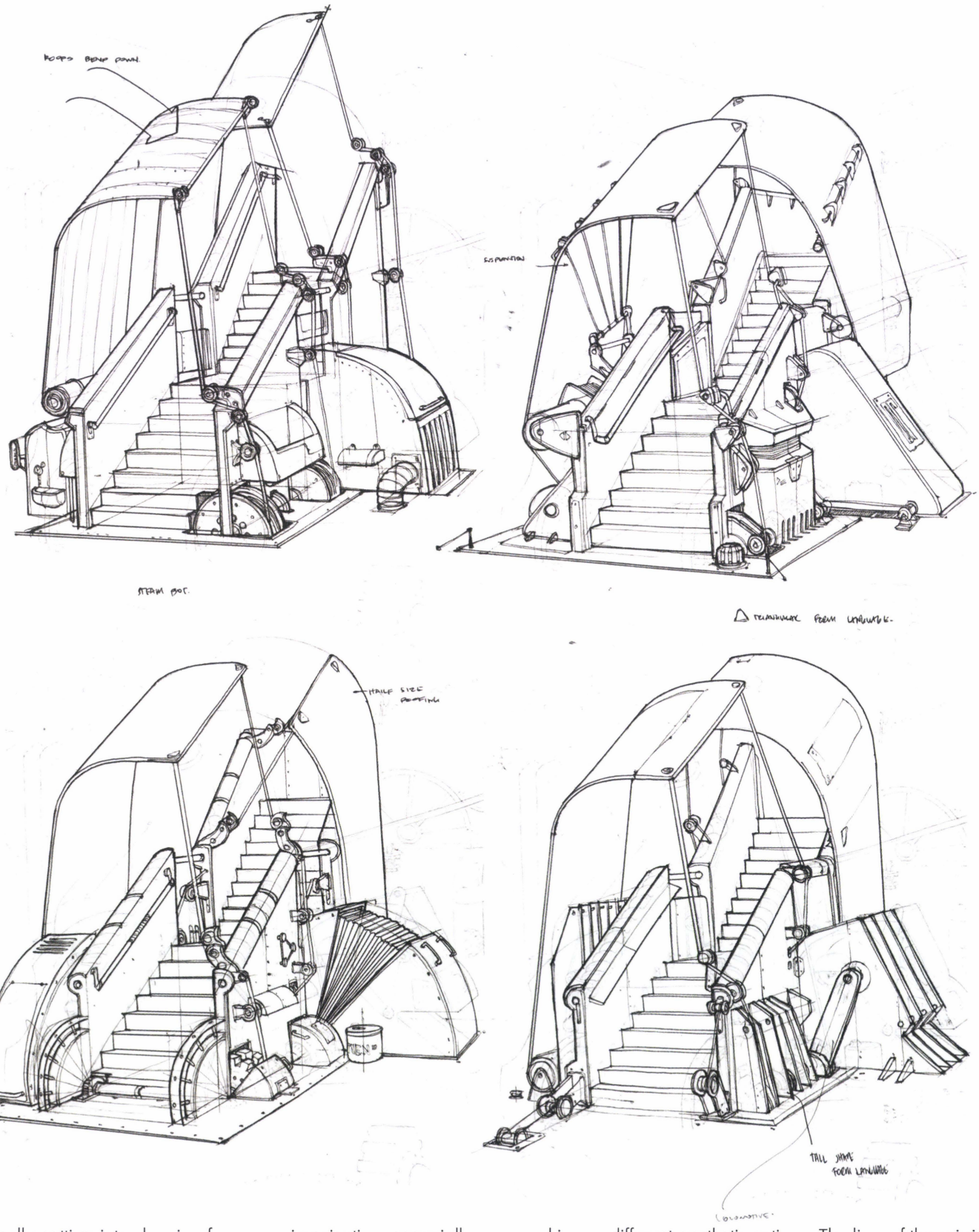

When really getting into drawing from your imagination, especially once you are a professional designer, a big part of that job is to provide endless variations that visually solve the same problem... and that means lots of sketches. In this series, John Park makes this repetition a little easier by copying or printing a very light version of part of his original drawing, then sketching over each one and working up different aesthetic options. The lines of the original are so light compared to the newer, heavier line work that they don't distract from understanding the new concepts.

View more of John's handy work at:
http://www.jparked.blogspot.com

NOT ALL PERSPECTIVE GRIDS ARE CREATED EQUAL

You might wonder about traditional drawing becoming obsolete with the popularity and ease of using 3D programs. The answer is not straightforward. In the worlds of architecture, industrial design, and entertainment, it's true that the most progressive development teams are utilizing a large dose of 3D tools to model their objects and environments instead of drawing everything by hand, but the best use of these computer-generated renderings and how they are set up relies on having a deep knowledge of perspective drawing. Having strong perspective-drawing skills opens up the many ways these types of renderings can be used. Looking ahead, all designers will need to have some 3D computer modeling and rendering ability, and the nature of how traditional media sketches are used will continue to morph and be abstracted and blended into a hybrid pipeline of digital and traditional skill sets.

Looking at the images on these pages, there are two pairs of scenes. The first image in each pair was rendered in MODO with the camera set to an 18mm lens with no distortion, and a 90° field of view. The second image in each pair was rendered with a 0.1 lens distortion. You can see clearly what happens to the perspective grids in each case. The straight-line perspective grids with no lens distortion are typical in video-game environments and 3D programs that don't have a lens-distortion option. What the computer programs do is look at how much of the scene is above or below the Horizon Line, and then all vertical lines converge to a Vanishing Point located on the side that is being shown the most. This is a weird distortion, and the only place you'll ever see this effect is inside digital environments.

In real life, when looking at a physical building projecting into the sky, the vertical lines converge to a Vanishing Point high in the sky, and the same building's vertical lines cross below the Horizon Line and converge to a VP far below. This is clearly not the case in the video-game examples. In order for vertical lines to converge above and below the Horizon Line, lens distortion must be added. This lens distortion bends the appearance of the lines and creates curvilinear perspective grids.

Why does this matter? If the goal is to draw an environment that has a more natural feel and more closely matches what is observed in photographs and with the naked eye, then a curvilinear grid would be used. But if the goal is to design game environments, a linear grid is needed. A good grasp of perspective-drawing fundamentals allows for use of either grid as an underlay; then a program like Photoshop can be used to add details in perspective. If strong drawing skills are lacking, this forces everything to be created in the 3D modeling program with many possible errors. So the blending of 3D modeling, rendering, and then 2D drawing and painting over the top of these types of computer-generated images is currently the most productive way to work professionally.

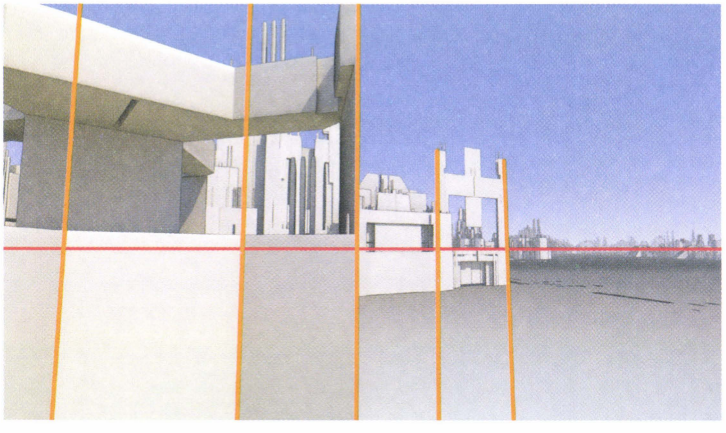

Linear perspective, found most commonly in digital video-game environments.

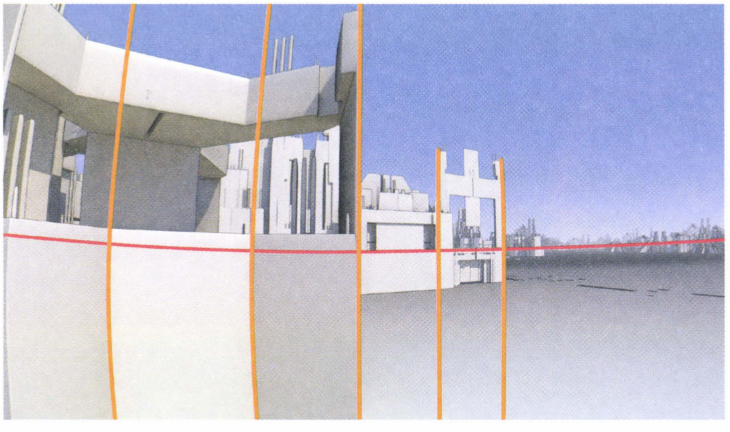

Curvilinear perspective, found most commonly in photographed environments.

Note how even with the Horizon Line close to the center of the image, the sky fills a slight majority of the frame versus the ground. This skews the convergence of the vertical line to above the horizon, making the vertical lines that continue below the horizon line divergent. To add an object like an airplane or a character in the foreground below the horizon, using this type of distorted perspective grid would look odd when viewed by itself but acceptable in relation to the surrounding scene.

With camera-lens distortion applied, as above, the horizon line has bent a little due to the fact that it is not exactly located at the center of the frame. If it were exactly centered, it would remain straight and horizontal. The reverse bend is happening in the image on the facing page for the same reason, but with a skew in that image to show mostly the ground instead of the sky. Also note that the vertical lines in it converge above and below the horizon line, as expected.

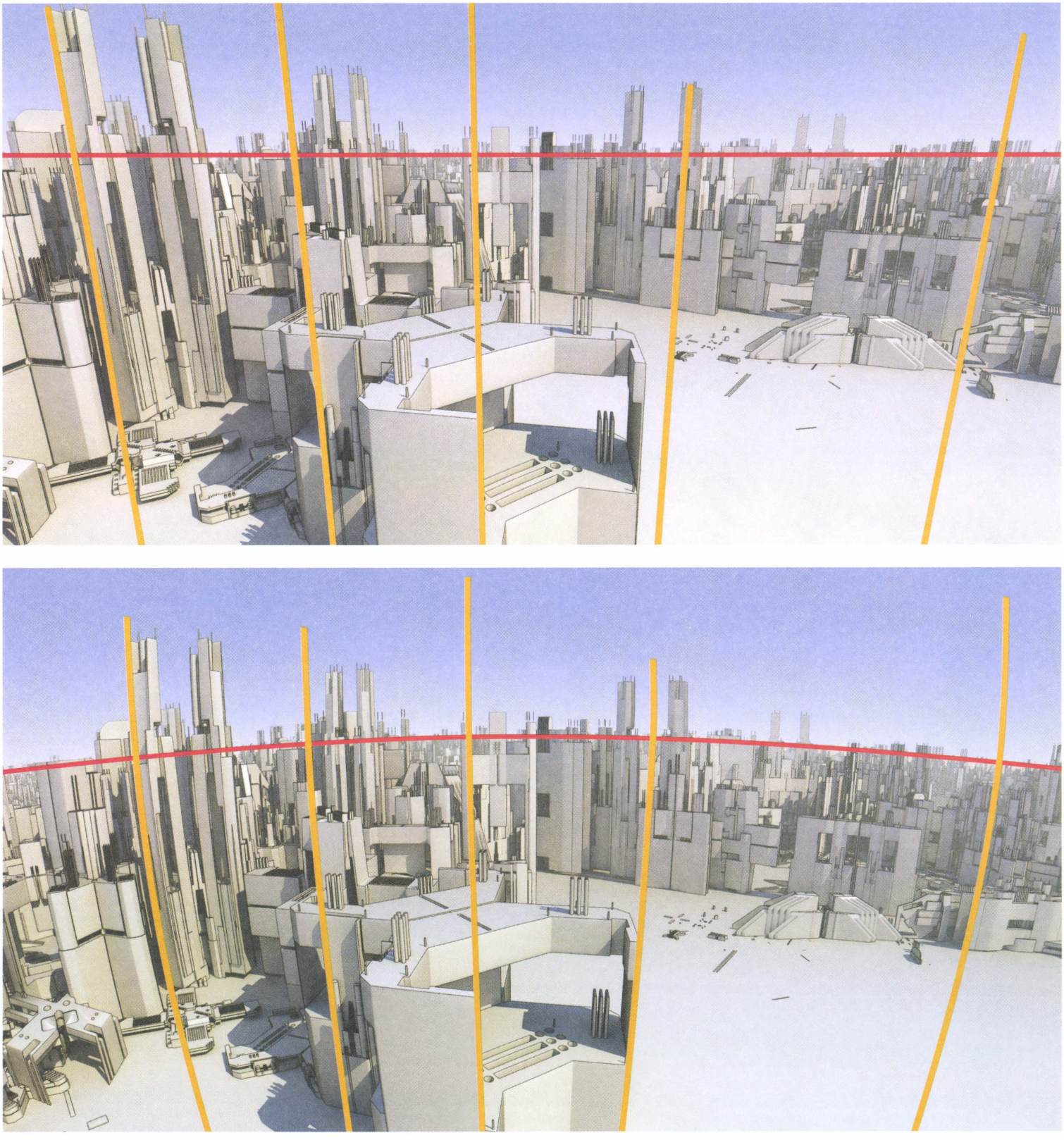

The complexity of sketching with a curvilinear grid, and the diverging vertical lines problem of the video-game grid, is the reason to draw with 1- and 2-point perspective grids with simplified vertical lines that are truly vertical, even though both of these examples show that's not the case. When the entire frame is filled with the environment below the horizon or above it, use a 3-point perspective grid. 1- and 2-point perspective grids are really simplifications of perspective drawing that have a lot of limitations and their own distortion problems. However, they are simpler to draw and they work well enough, so they are the default grids for doing production work where speed is more important than true accuracy. The entire design team also understands that these simplified grids are not exactly true-to-life but rather a kind of designer shorthand in creating the illusion of 3D perspective space on a flat surface.

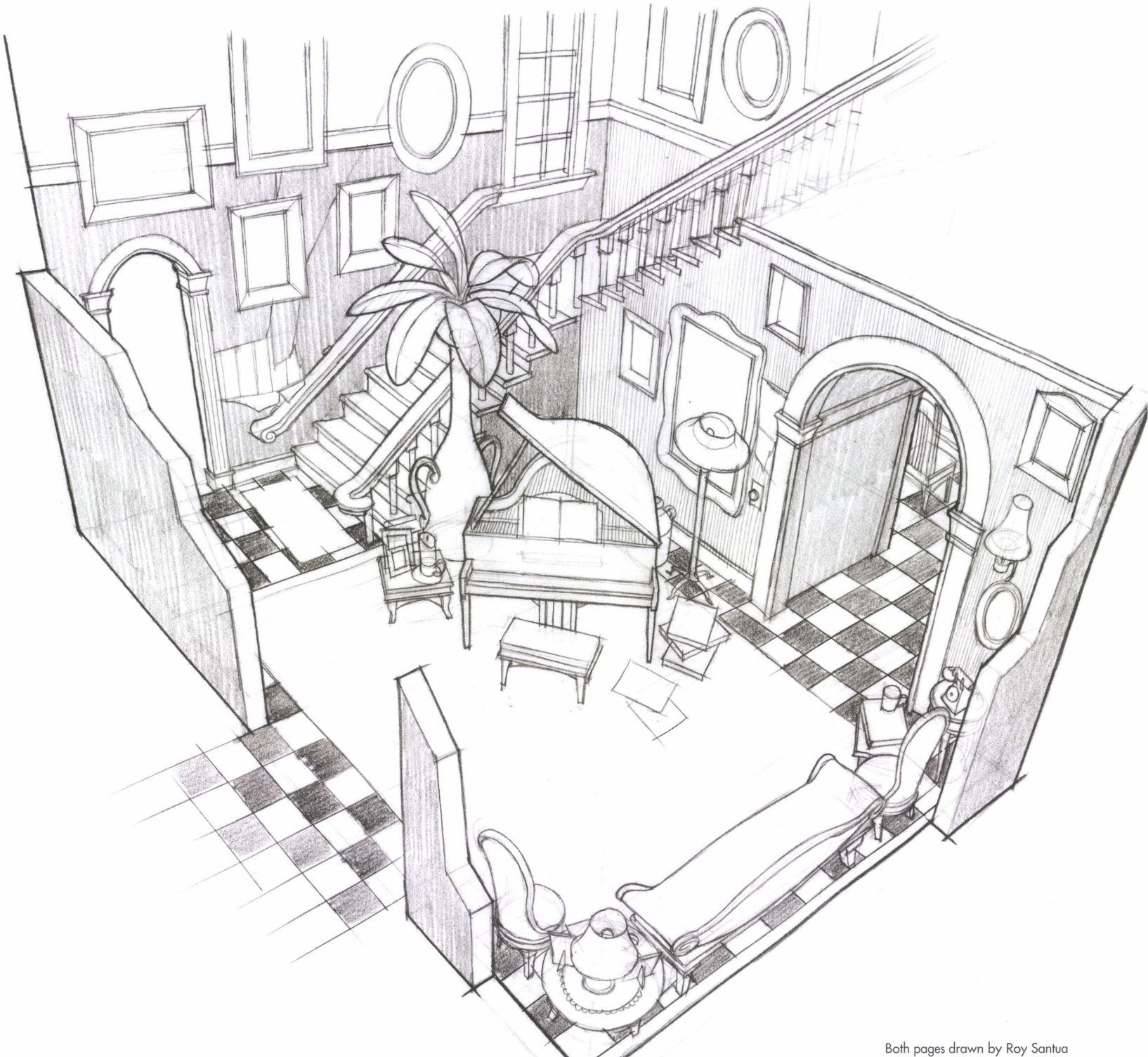

Both pages drawn by Roy Santua

The 3-point perspective grid for the above sketch is similar to what would be generated by a 3D computer program. From this POV it is very near to what would be observed in reality, without needing to add curvilinear perspective. So for this kind of view, a computer-generated perspective grid works great!

The sketch on the opposite page (bottom) shows the influence of a perspective grid that came from a computer program, which is exactly what our former student Roy Santua wanted for this interior space he was designing for the digital world. It would feel odd to add a foreground object to this scene because the vertical lines would diverge below the Horizon Line. In that case, it would be advised to use a 1- or 2-point perspective grid so the vertical lines could be drawn perpendicular (90°) to the Horizon Line. Drawing in perspective is never exactly perfect and trade-offs will be encountered, so with an increased knowledge of these pros and cons you can make the appropriate decisions in your own work.

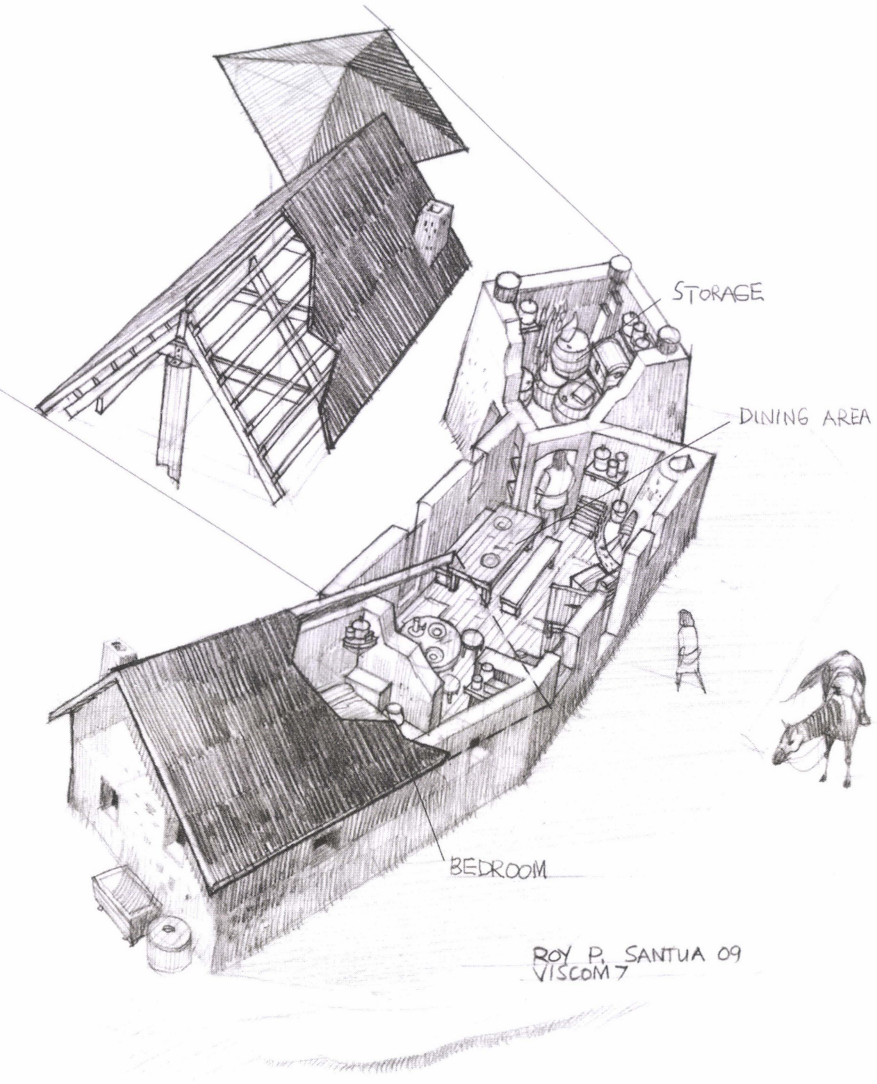

Cutaway View

The drawing to the left is an excellent example of a cutaway view, an informative type of perspective drawing used to communicate one's design to others. Part of the foreground surface is literally cut away to expose what is behind or beneath it. As an example, Roy has cut away the roofing to expose the framework of the structure, and he has also cut away part of the roof and interior wall to reveal the arrangement of the furnishings and expose more of the rooms' interiors. These types of drawings provide a lot of bang for the effort as they communicate many things at once.

View more of Roy's great work at:
http://rsantua.blogspot.com

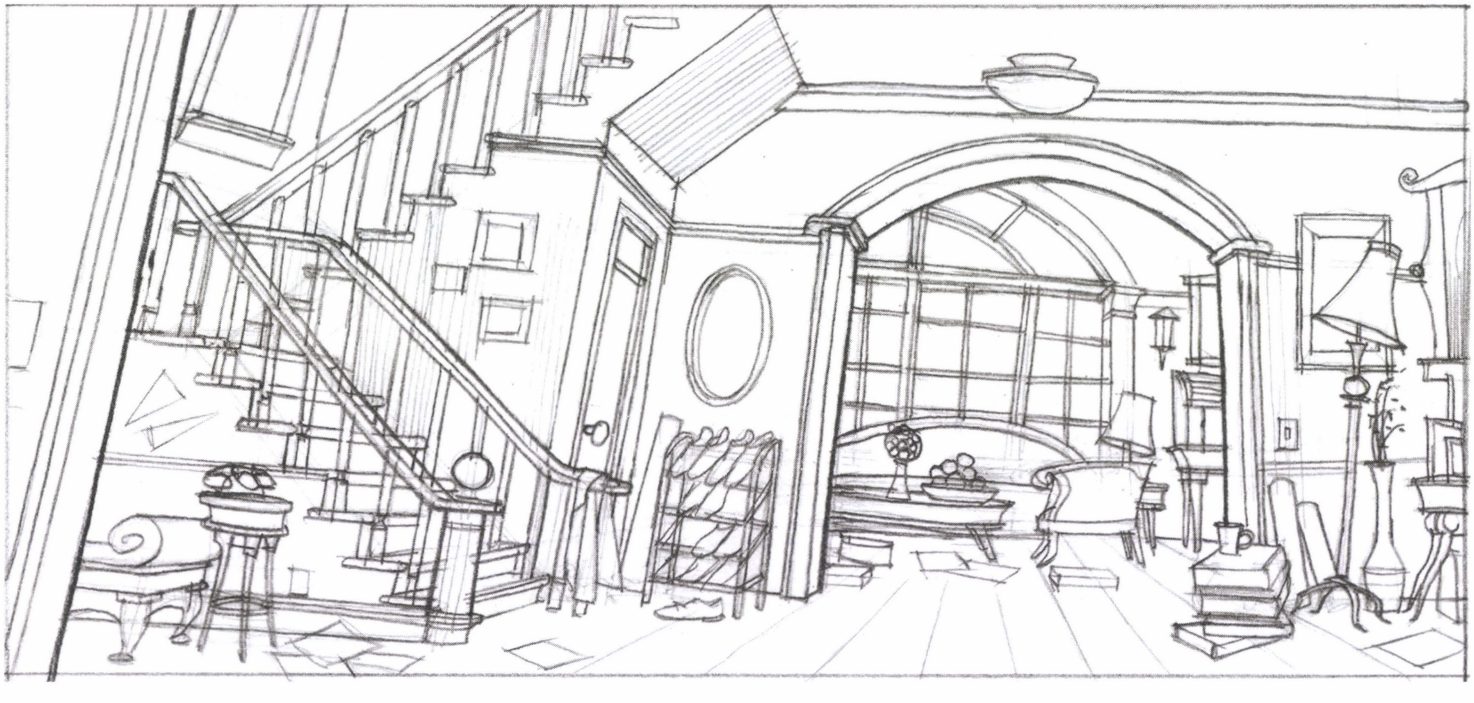

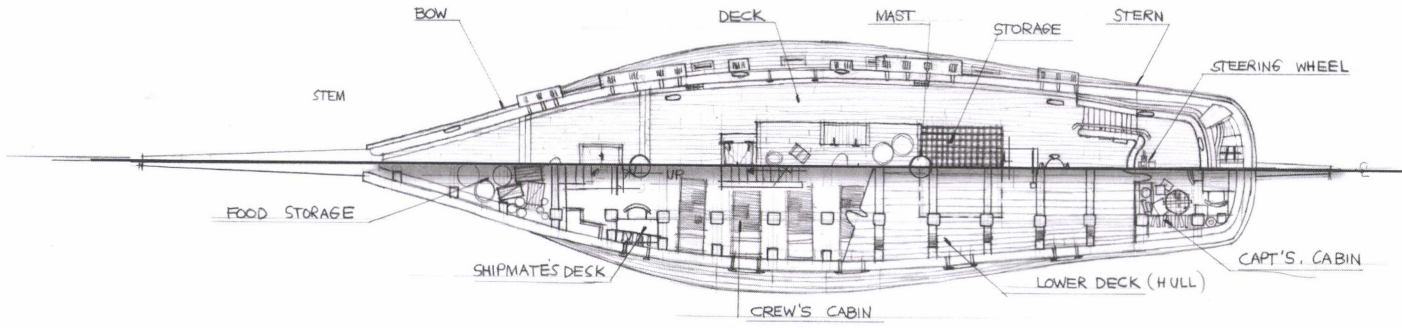

Draft Views

Draft views, also called orthogonal views, show an object without perspective. By getting rid of the perspective convergence, dimensions can be added to the drawing that make it possible to build it to any size. The goal here is the accuracy of dimensional information. Both of these draft views are of the exact same ship, in top view and in side view. It's often a great idea to draw draft views of an object before attempting to sketch it in perspective. Sketching a single draft view is much easier than doing it in perspective, but it's also easy to draw things in a draft view that will cause problems when trying to translate the forms into the other views and ultimately into perspective. It's easier to concentrate on design when not worrying about perspective, but the disadvantage is that once the draft view is finished, there is only one view of the object.

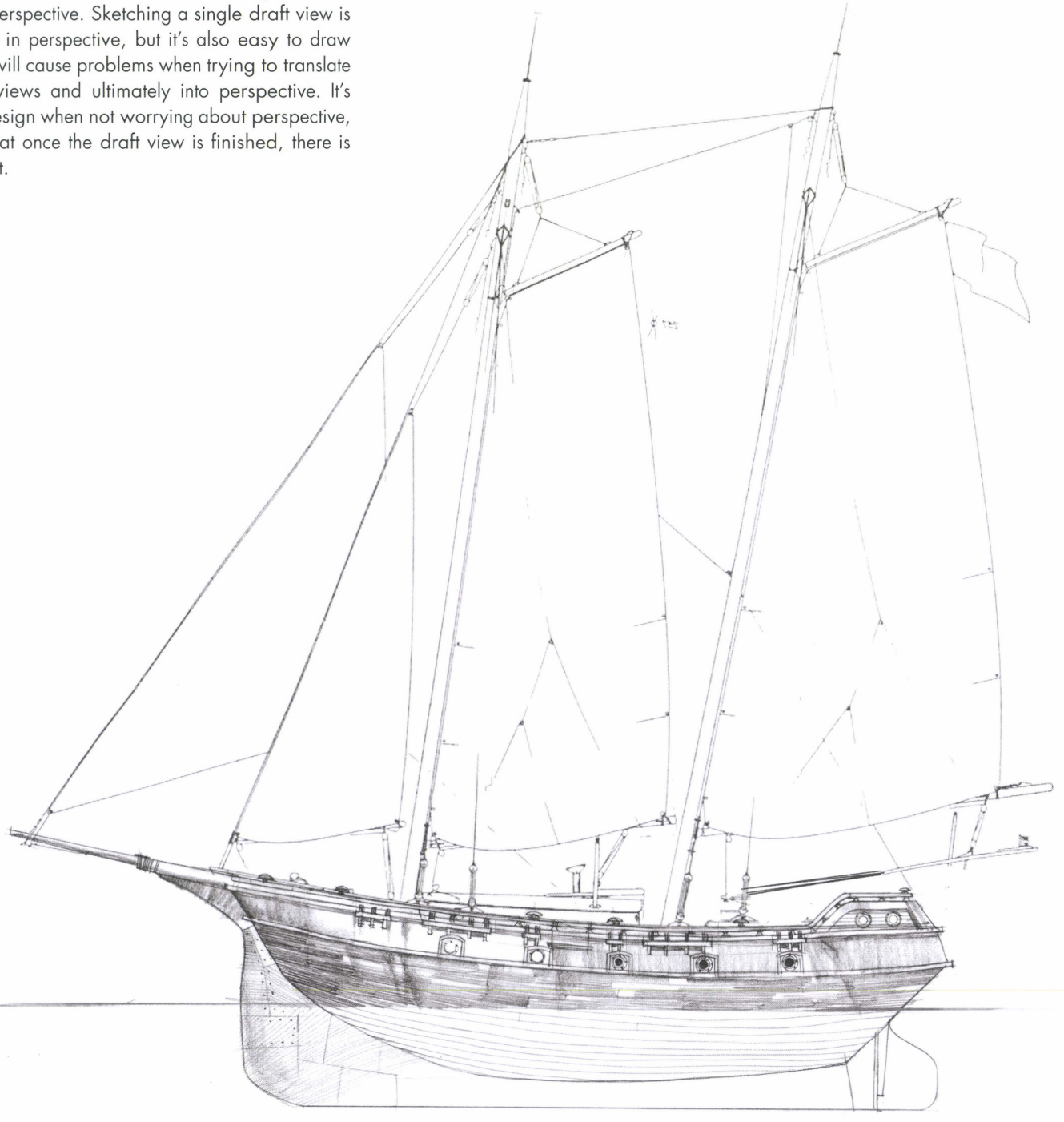

Both pages drawn by Roy Santua

The advantage of sketching a perspective view of an object is that all of the draft views are actually being drawn, influencing design and form simultaneously. Here Roy has focused on sketching certain areas of the ship from a variety of different perspectives. All of the steps to do these drawings are the same. Start with building a good perspective grid, then work on the bigger surfaces, and add the smaller objects last.

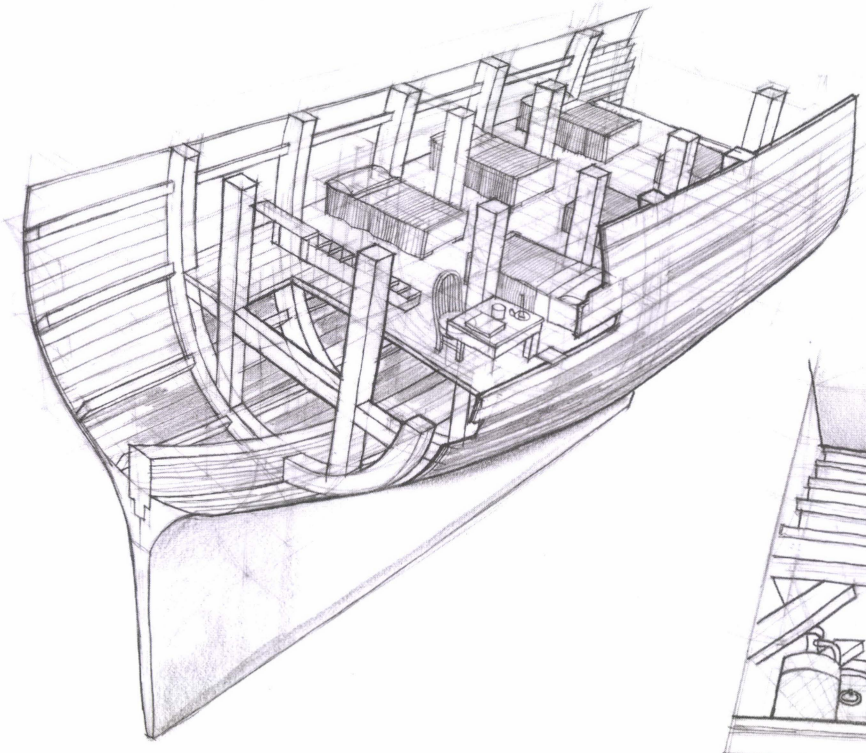

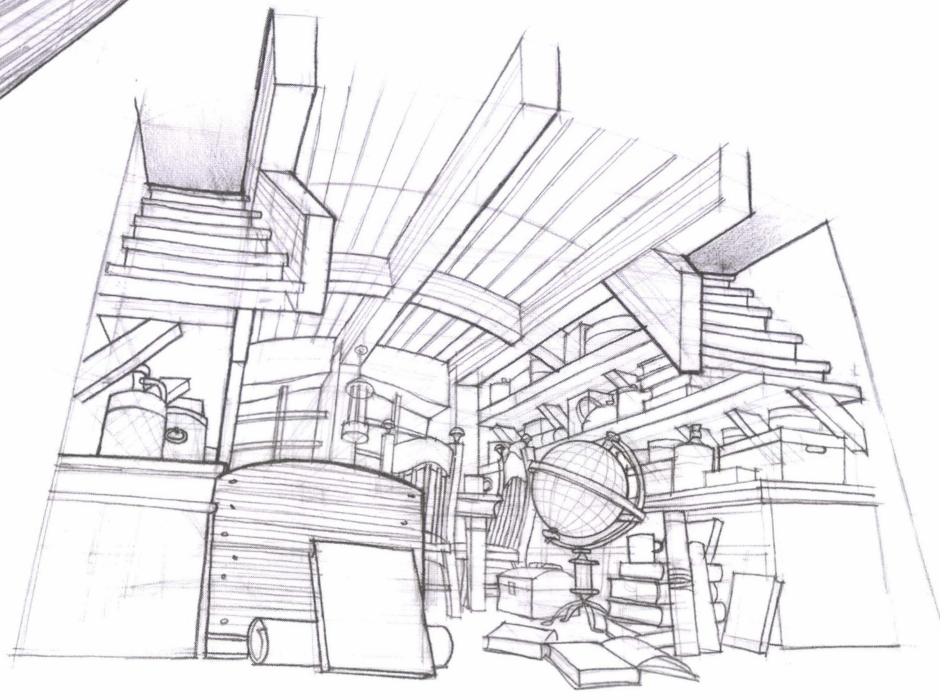

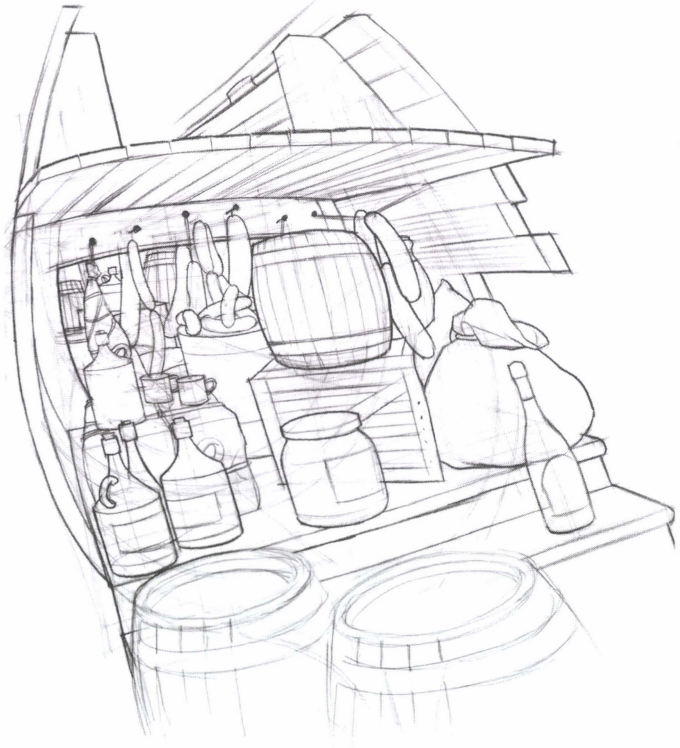

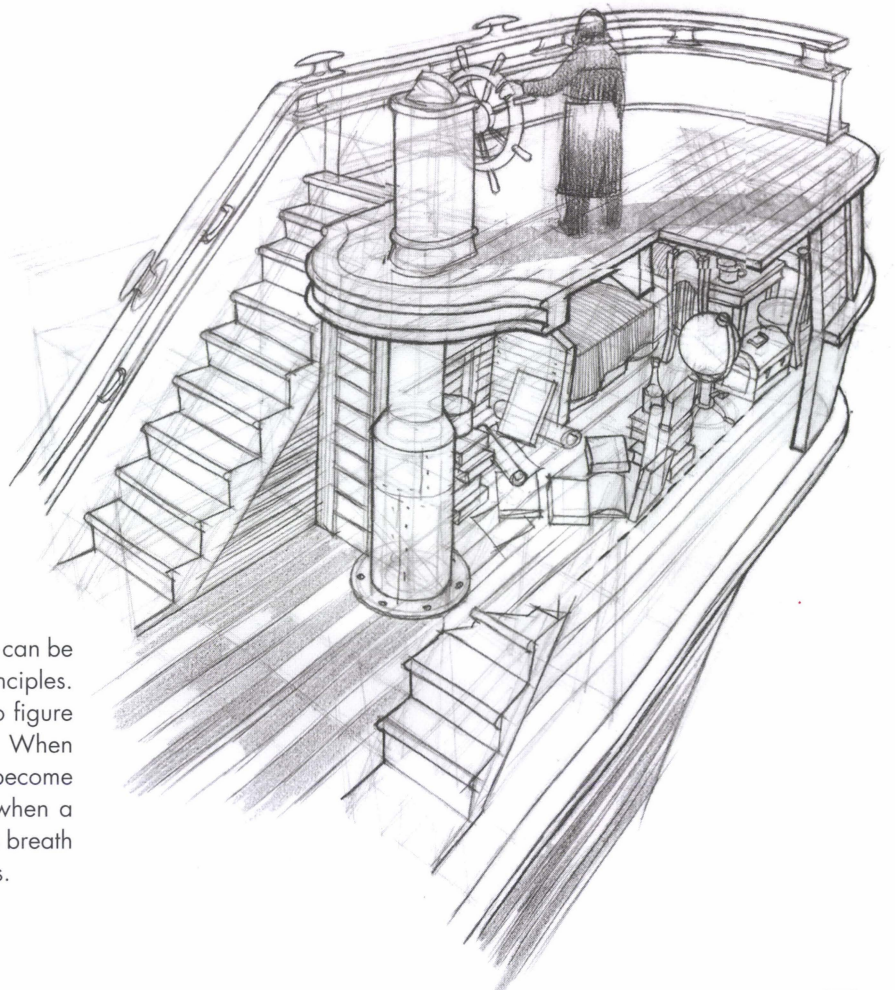

The scale of the object makes no difference and any size object can be drawn accurately using the same basic perspective-drawing principles. Always start with a good set of guidelines. Use section lines to figure out the surfaces and silhouettes of the objects in the drawing. When constructions are rushed and guidelines not used, drawings become looser and less accurate. This is fine for quick sketches, but when a more precise drawing is required, just remember to take a deep breath and be patient while you work through the construction process.

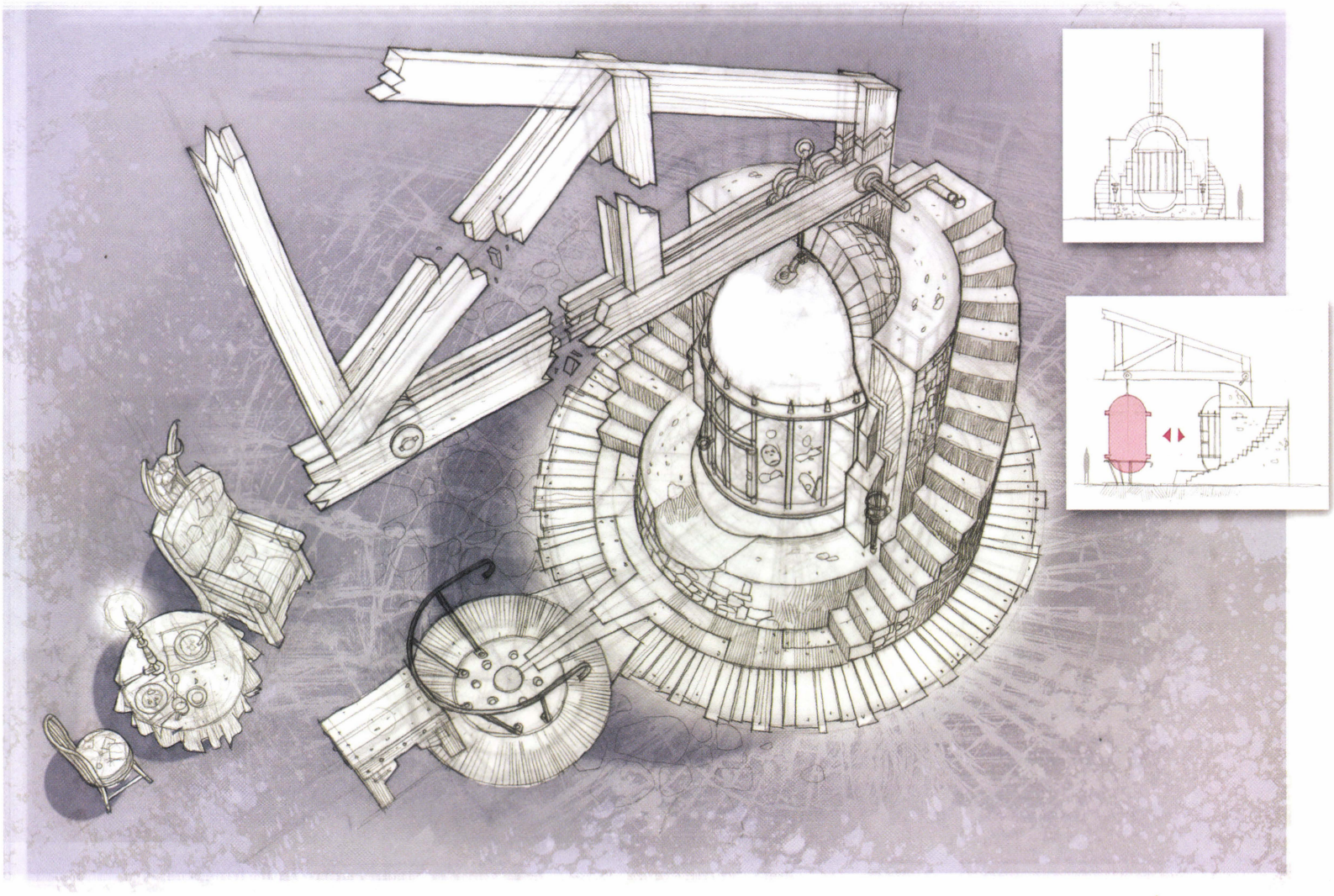

ASSEMBLY AND EXPLODED VIEWS

Both pages drawn by Roy Santua

Assembly and exploded views communicate how things go together. These can be very specific. The drawing on this page shows a POV that communicates a lot about the assembly and arrangement of the props and furnishings in a scene. Accompanying this informative assembly drawing are two draft views of the same main object with the cage highlighted with color and a graphic explaining the planned movement of the cage.

Good exploded views like the drawings to the right are able to communicate without notes and arrows, much like the informative drawings in IKEA assembly directions. The POV is chosen not with an eye toward drama or making us feel like we are in the scene but purely for the best way to communicate how the objects are made, assembled or arranged. If done well, these drawings are worth more than a thousand words in any language. Looking at Roy's line work, notice how inside each drawing he varied the line weight to help the viewer understand the smaller overlapping elements of each object.

Also notice the backgrounds that Roy added which make the silhouettes of the objects pop out a little more than they would have if they had just remained on white paper. To add a background, either make a copy of the original drawing and use markers to block in the value and color of the background or scan the original and do the same thing in a computer program like Sketchbook Pro, Painter or Photoshop.

To construct an exploded view, start by drawing the object in its assembled position and then do an overlay using tracing paper while you move and slide the exploding parts by using perspective guidelines. Generally the exploded parts should not move diagonally; instead, move the parts linearly in the perspective. Move the bigger pieces first and then explode off the smaller parts from these larger ones like the drawing opposite (top). Use overlaps and strong outlining work to help communicate the relationships of the floating parts to each other. It's not uncommon to end up with lots of layers of tracing-paper overlays of the various parts when composing these drawings.

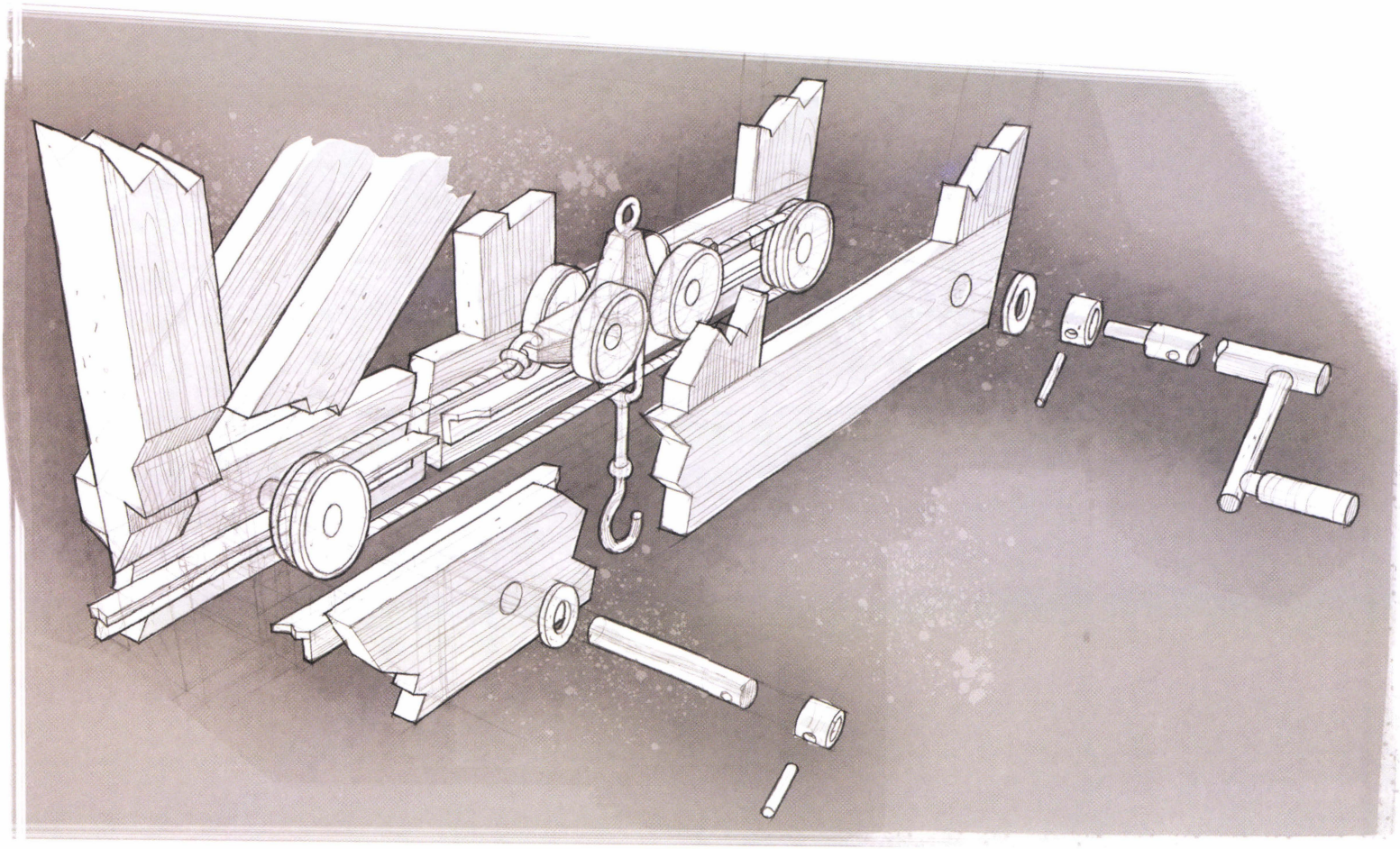

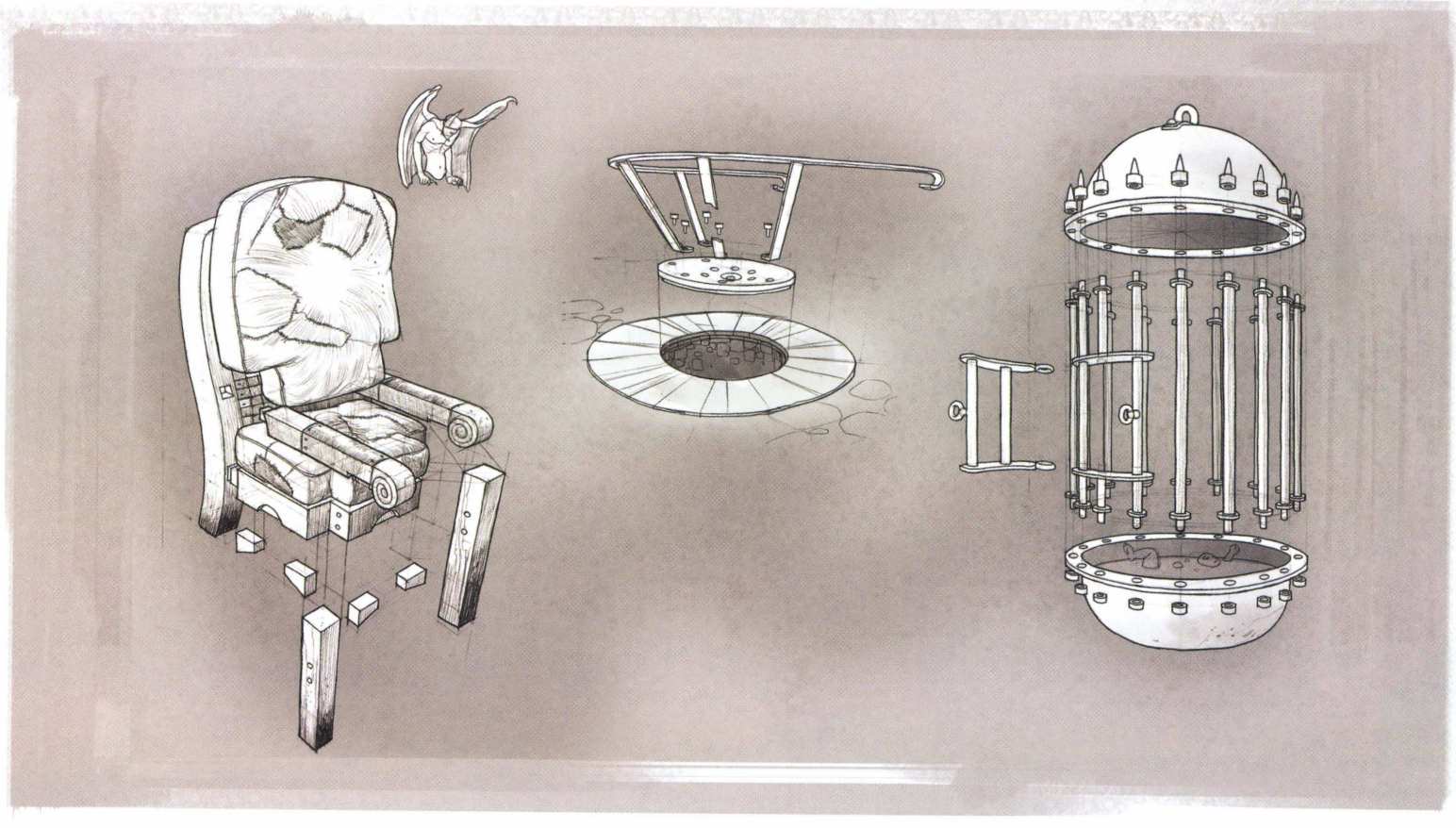

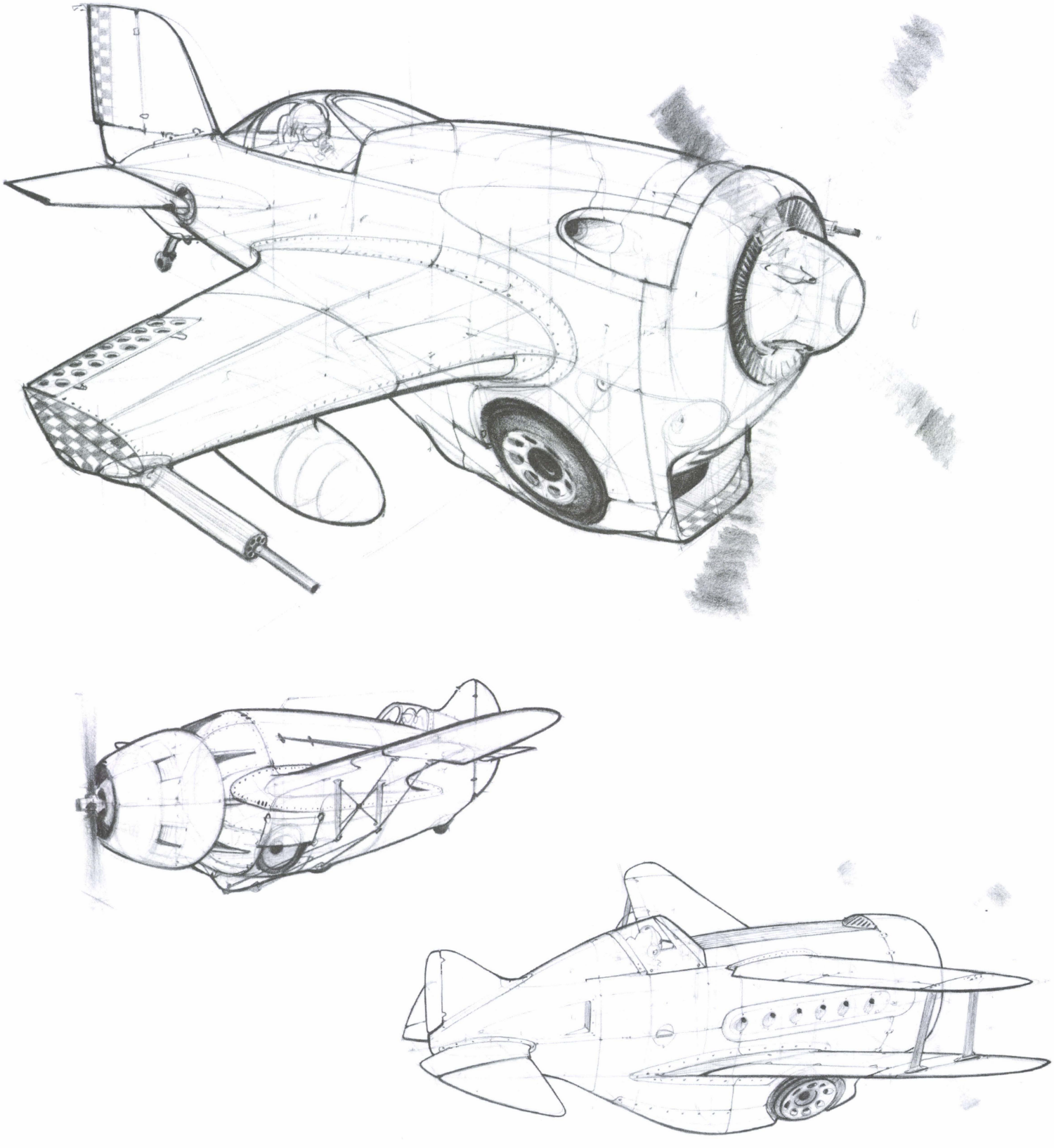

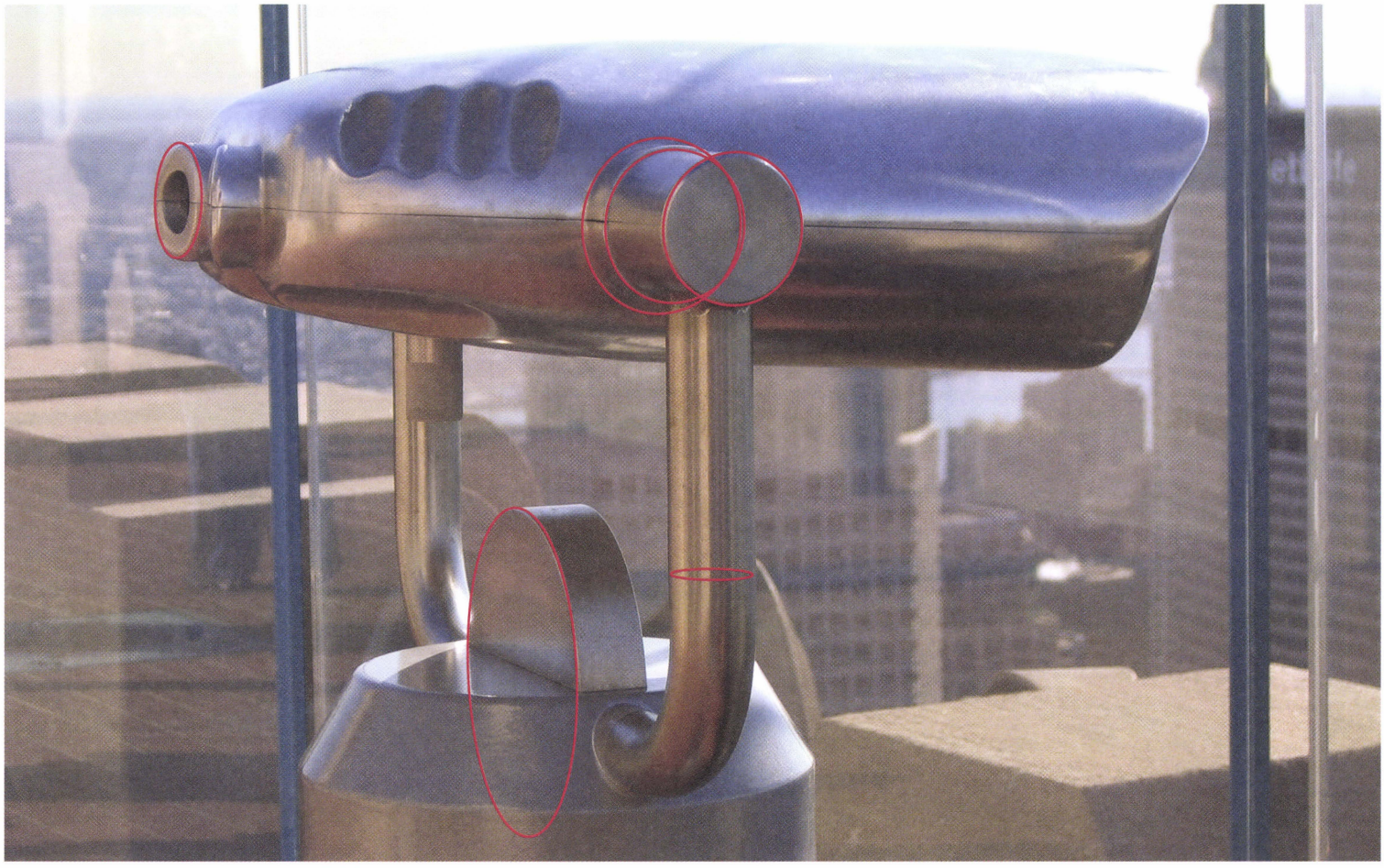

CHAPTER 05

ELLIPSES AND ROTATIONS

Ellipses are simply circles in perspective. The accuracy of a ellipse can make or break a drawing so this entire chapter is dedicated to learning how to draw them properly.

Drawing ellipses is the basis for hinging flaps, rotating objects and constructing spiral staircases. But best of all, drawing ellipses helps to generate excellent perspective grids based on perfect squares multiplied in any direction. The ability to place a freehand-sketched ellipse on any minor axis is the primary skill needed before moving into this chapter.

Review this skill, and how to practice it, in Chapter 1.

ELLIPSE BASICS AND TERMINOLOGY

Ellipse anatomy

The minor axis is the most important line in the construction of circles in perspective. An ellipse has a minor and a major axis. The minor axis divides the ellipse in half across its narrowest dimension and the major axis divides the ellipse in half across its longest dimension.

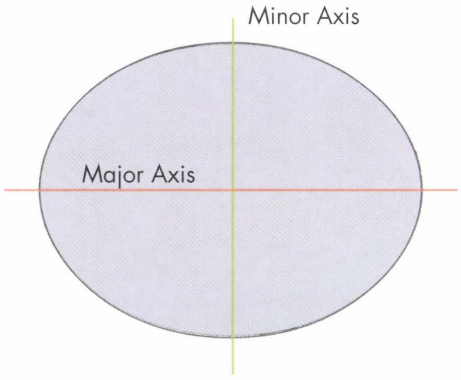

Ignore the major axis

The minor axis always intersects the center of any foreshortened square drawn around it. The major axis almost never intersects the center of a foreshortened square drawn around it. For this reason, the major axis is of no help when placing an ellipse into perspective and can be ignored.

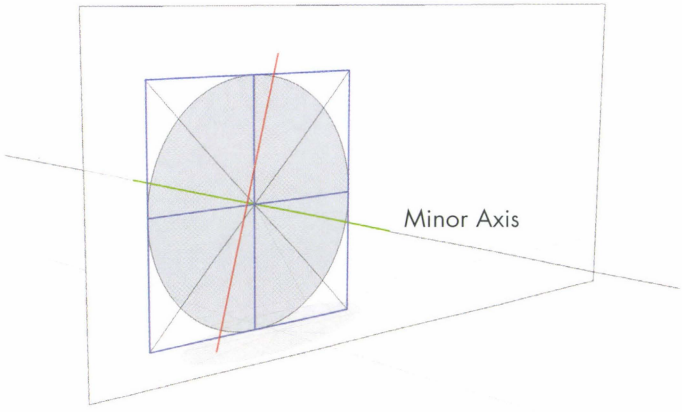

The minor axis is key

The minor axis has another important perspective-drawing feature. It always points to the Vanishing Point that is perpendicular to the ellipse's surface being sketched. This makes the minor axis like the axle of a wheel.

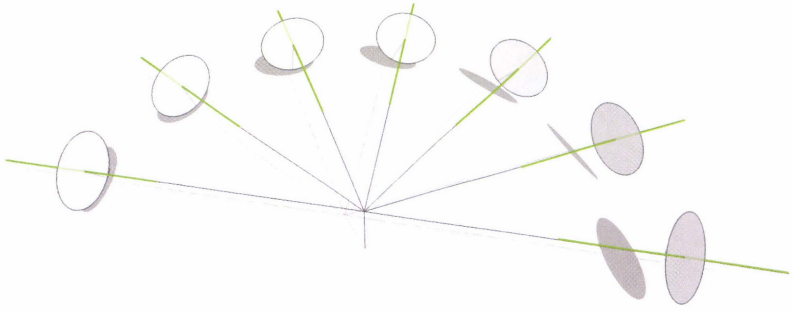

Ellipse degrees

The degree of an ellipse is the measure of the angle of the Line of Sight into the surface of the ellipse. To better understand the degree, imagine looking straight ahead at a row of circles on the ground, with your Line of Sight parallel to the ground plane. The degrees of the ellipses as they move toward the Horizon Line will be less than those directly below your feet. A 0° ellipse would be on the Horizon Line. A 90° ellipse is a perfect circle directly below. The other degrees are found in between.

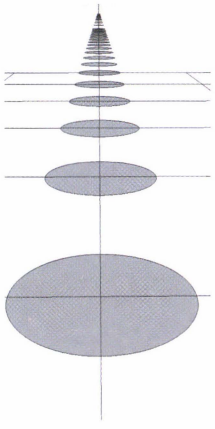

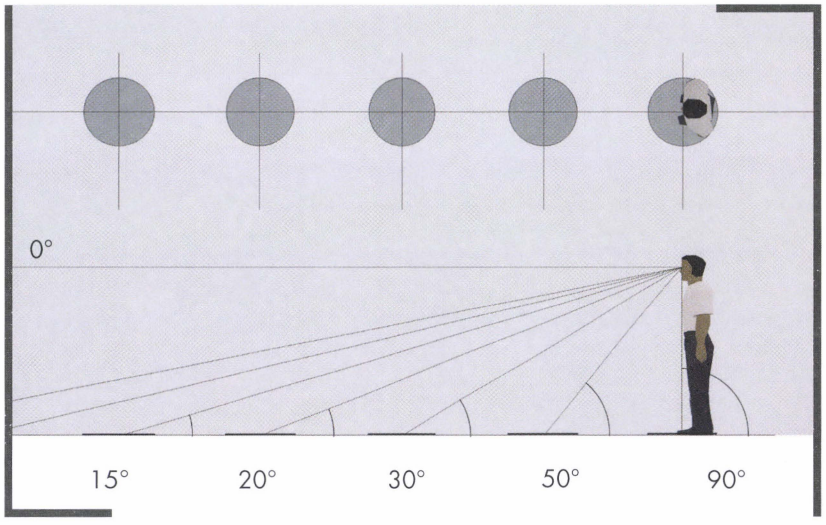

PLACING A CIRCLE IN PERSPECTIVE OR DRAWING ELLIPSES

Placing ellipses on surfaces

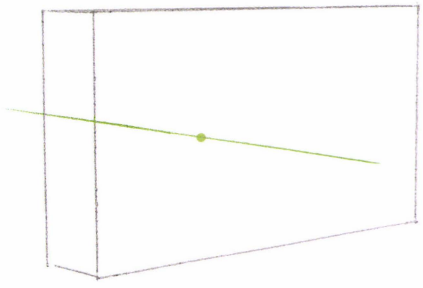

1

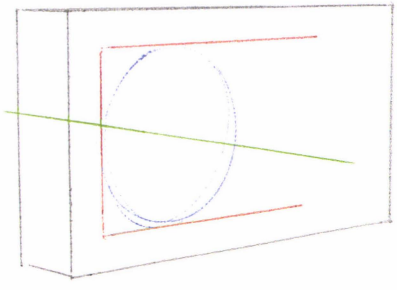

2.

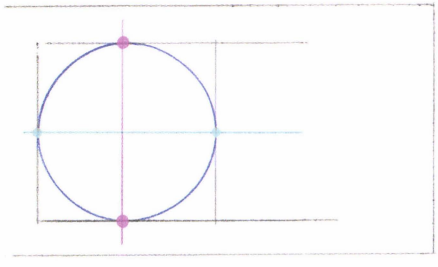

3.

With the knowledge that the minor axis is actually a 3D element of the ellipse, we are ready to place circles on surfaces in perspective. Remember that the minor axis is like the steering column to the ellipse's steering wheel; they are perpendicular to one another.

THE MINOR AXIS IS ALWAYS PERPENDICULAR TO THE SURFACE ON WHICH THE CIRCLE WILL BE PLACED!!!

1. Define a vertical surface upon which to draw the circle in perspective. Draw a line that is perpendicular to this surface. This line will be the minor axis of the ellipse.

2. Draw an ellipse around the minor axis and estimate the degree of ellipse. Then, draw a bounding box around the loose ellipse. The bounding box tests if the correct degree of the ellipse was drawn.

3. The side view of the circle on the surface shows the conditions that need to be met to find the correct degree of ellipse. There is only one circle that will fit between all these lines. Here are the conditions that the circle and the ellipse need to fulfill:
- The circle touches the left vertical line halfway, (cyan point).
- The circle touches the upper and lower line at points that are vertically aligned, (magenta points).
- The circle touches the closing vertical line at the halfway point as well. Connecting the front and back points creates a parallel line to the upper and lower borders, (cyan line). All three lines share the same vanishing point.

4. Let's try this! Draw a light ellipse and check if it meets all conditions. Should it not meet all conditions adjust the degree of the ellipse to become larger or smaller until all conditions are met. Then clean up the drawing with an ellipse guide.

4.

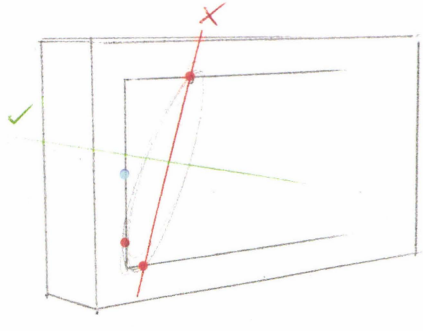

Degree too small
Always ensure that the minor axis is correct. This is the condition that must be met before checking the other requirements. The vertical midpoint is not met (cyan point) and the touching points are not vertically aligned. The ellipse degree needs to be increased. Sketch a larger degree ellipse.

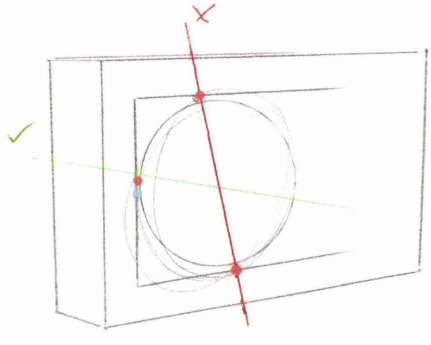

Degree too big
The touching points are not vertically aligned. The ellipse degree needs to be decreased. Sketch a smaller degree ellipse.

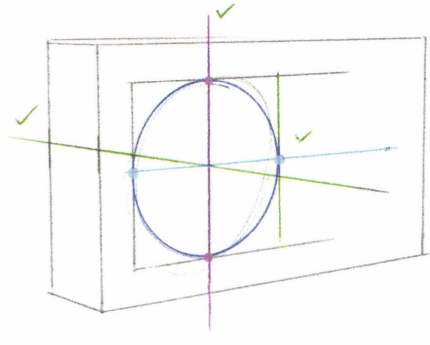

Degree correct
All conditions are met. Closing off the back with the vertical line defines the back vertical halfway point. Connecting the two halfway points creates a (cyan) line that points to the correct Vanishing Point. Take the ellipse guide and clean up the ellipse!

CREATING A CUBE USING ELLIPSES

Now that you know how to place circles in perspective as ellipses, it becomes possible to create cubes in perspective. This is very useful for both creating grids and also controling the proportions of objects in perspective.

This technique assumes that you are proficient at drawing an ellipse and then drawing a perspective square around it. Practice over a grid until you are comfortable with the technique. Let's draw some cubes.

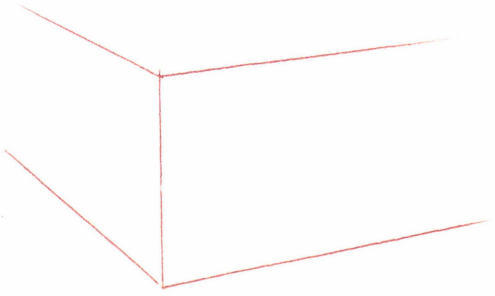

1. Define the height and the front corner of the cube over a perspective grid. This establishes the minor axis Vanishing Points for the ellipses.

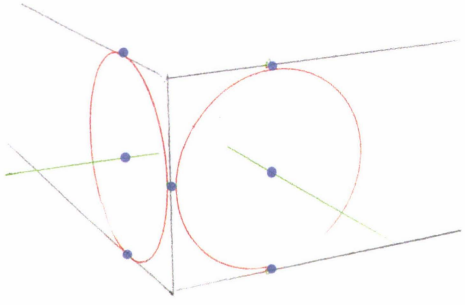

2. Place an ellipse on each side, tangent to the corner. Make sure to use the correct minor axis while drawing each ellipse and then adjust the degree and size to meet all conditions. Ellipse guides don't always have the perfect size or degree so some compensation for this might be required.

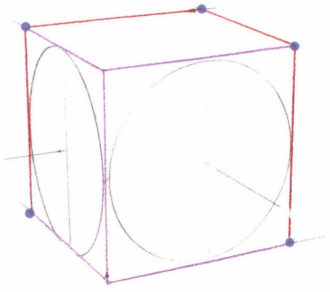

3. Add vertical lines tangent to the ellipses to define the proportions of a cube. Add the top surface by following the perspective grid defined by the previous lines.

OFFSETTING ELLIPSES

Offsetting ellipses to create more complex assemblies becomes a lot easier once the location of the ellipses' minor axis is known.

Use an ellipse guide to modify the size of the ellipse, while keeping the degree the same, as long as these smaller and larger ellipses are kept rather close together along the minor axis. When moving far along the minor axis into deeper perspective, remember to change the degree as well. Just redraw a defining perspective square to double-check the degree, as was explained on page 073.

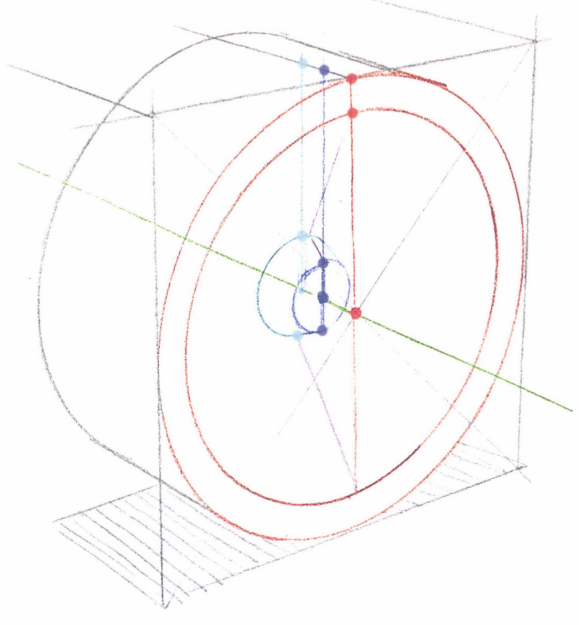

When drawing cars, make sure to know which way the wheels are turned. If they are aligned straight-ahead, the minor axis of the wheel will match the grid of the car body itself. However, if the wheels are turned, the correct minor axis relative to the car body must be found before drawing the ellipses.

Always remember that drawing ellipses properly requires only two things, in this order: 1) a correct minor axis, followed by 2) the correct degree. If the minor axis is not correct no amount of adjustment to the degree will ever make the ellipse look right.

HINGING AND ROTATING FLAPS AND DOORS

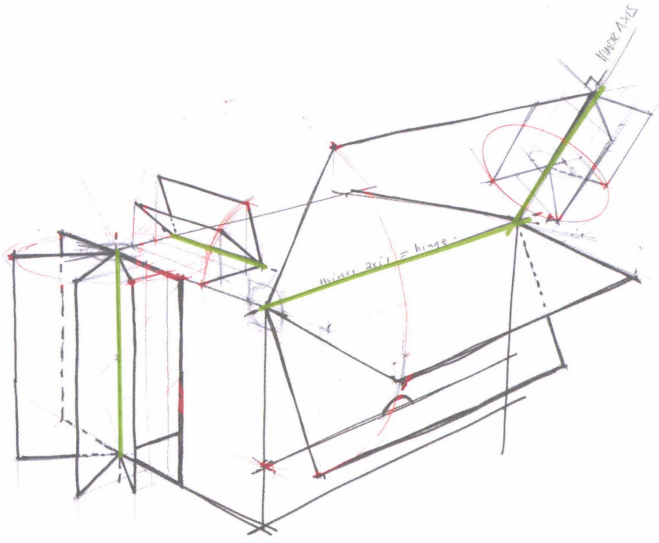

Hinging and rotating elements are possible once ellipses can be accurately sketched in perspective. These drawings are shown in raw form, without clean-up, so that the construction of the rotations is obvious.

Green Lines:
The minor axes, which are the hinges in the drawing, are marked in green. For each rotation, find the hinge that turns the object. Ellipses are drawn upon these hinges to calculate the rotated dimensions of the flaps.

Blue Lines:
Entire construction grids can be rotated and redrawn by rotating as many points as are needed to help redraw the rotated surfaces. This is a bit more difficult than just rotating the flaps of a box but it's the same construction technique relying on the use of accurately drawn ellipses.

Red Lines:
The paths of the actual points that rotate in the drawings are marked in red. Sometimes these construction ellipses are not fully drawn since the entire ellipse is usually not needed to help construct the rotation. Be mindful when drawing by hand that these are still guesses, and can always be cleaned up with an overlay.

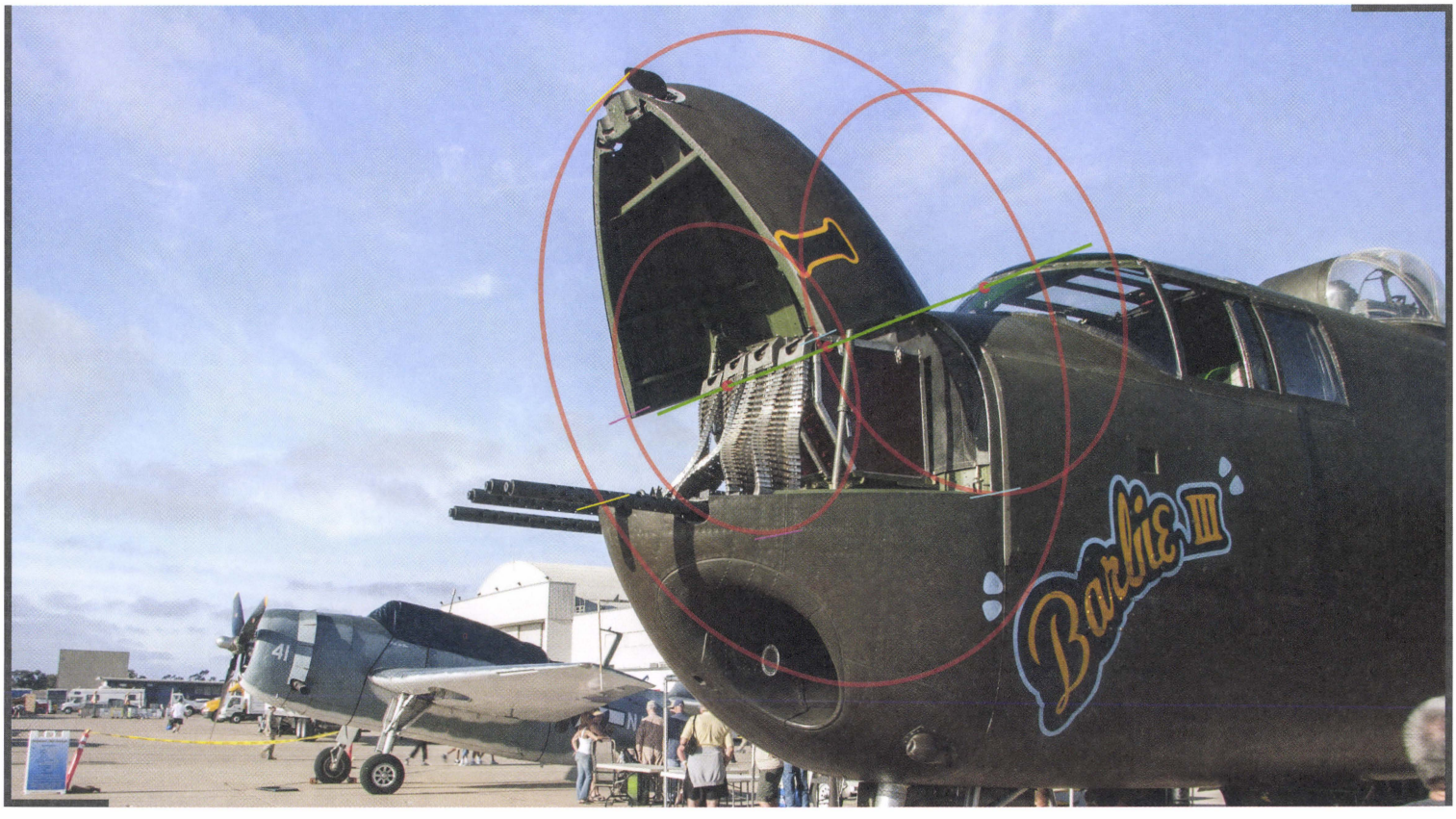

SUBDIVIDING ELLIPSES

Being able to subdivide an ellipse will help with drawing things like spiral staircases, equally spaced links on a tank tread, hour positions on a clock face, or teeth around a gear.

Keep your pencil and precision sharp to get the best results.

1. Set up the ellipse in perspective, which is to be subdivided. Take the vertical height of the ellipse and extend it to the side. Close the lines with a half-circle.

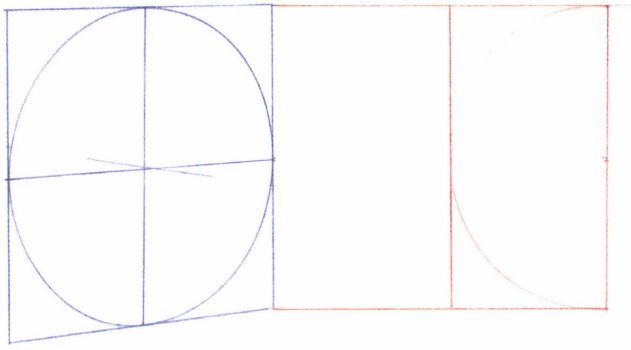

2. Add subdivision lines starting at the center of the semi-circle by using a protractor. In this example the circle is divided into 22.5° increments. Here, only a quarter-circle is sub-divided, but feel free to add more increments as needed.

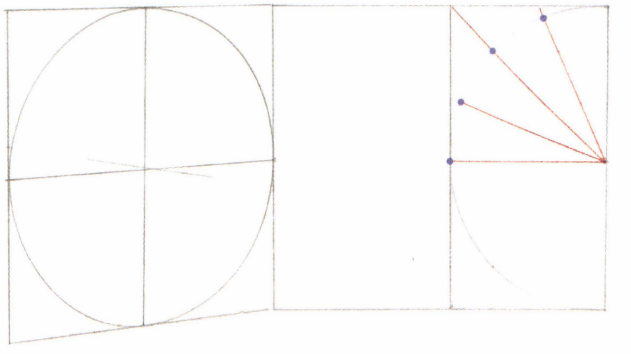

3. Draw horizontal, parallel lines through the intersection points of the circle over to the vertical line of the ellipse. At each of these points on the vertical line tangent to the ellipse, extend the lines into perspective. Make sure that these lines converge to the proper Vanishing Point.

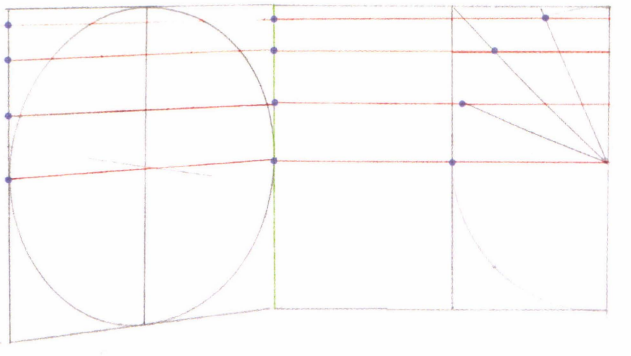

4. Mark the intersection points of the parallel lines and the ellipse. Connect the intersection points of the ellipse through the center of the ellipse and continue them to the lower half.

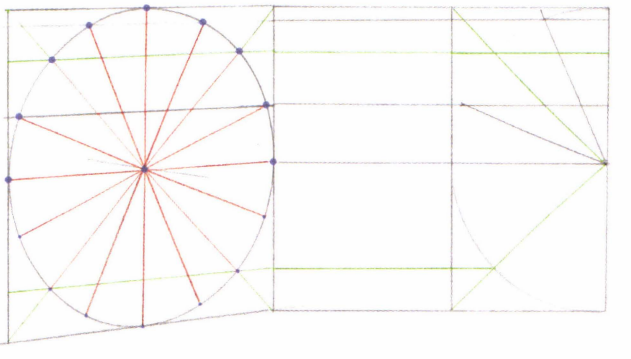

To create a spiral, like a spiral staircase, use the subdivision of ellipses. A spiral staircase has even "pie slices" for the stair treads that are positioned at the same height increments to each other. Let's tackle one thing at a time.

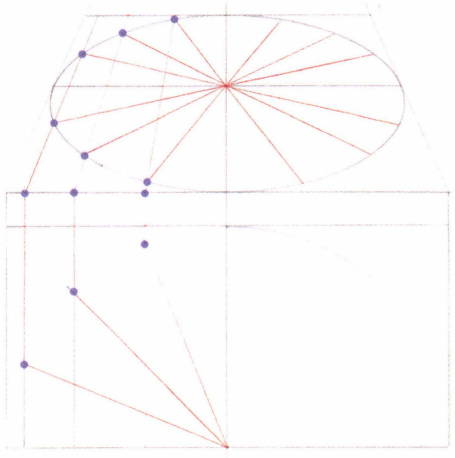

1. First, subdivide the ellipse into the number of steps desired. The same subdividing technique is being used, but this time the ellipse is on the ground. Therefore, use the horizontal width line tangent to the ellipse instead of the vertical height line.

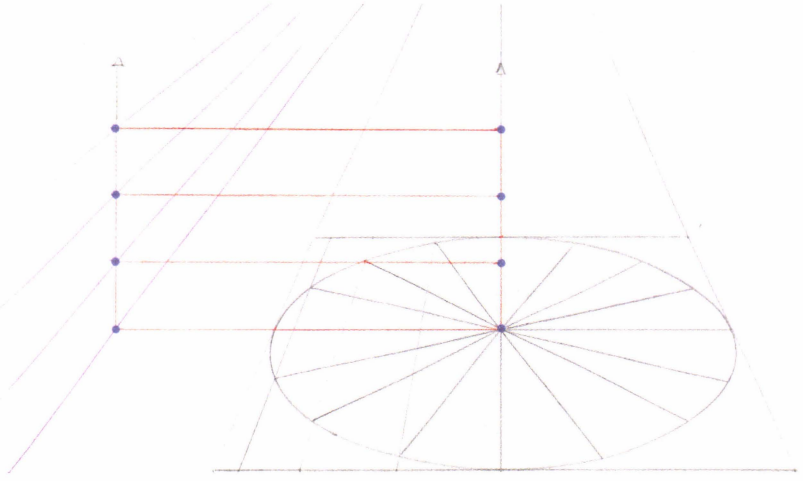

2. Now, prepare to lift the stairs. Each step will have a level surface, but each of its three corners are at different perspective depths. To construct this, mark lines that will help to find the correct height in perspective depth. First, mark the height of the steps in the center of the staircase. Then, transfer this height to the side (red lines), out of the way of the construction. Next, draw a vertical line and mark the intersection points. Finally, to extend the transferred height into perspective, add parallel lines that converge toward the Vanishing Point.

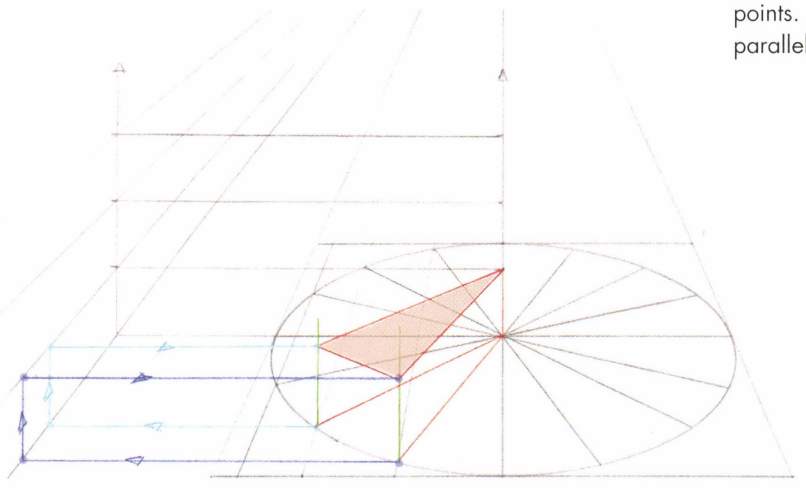

3. Build the first step by drawing two vertical lines on the ellipse intersection points (green lines). To find the correct height for the first stair, draw two lines to the left parallel to the Horizon Line until they intersect the height scale. Next, draw vertically up to the next height line and then draw two parallel lines back to the stair verticals (cyan and blue lines). The correct height for the stair in perspective has been found! The completed first step surface is shaded orange.

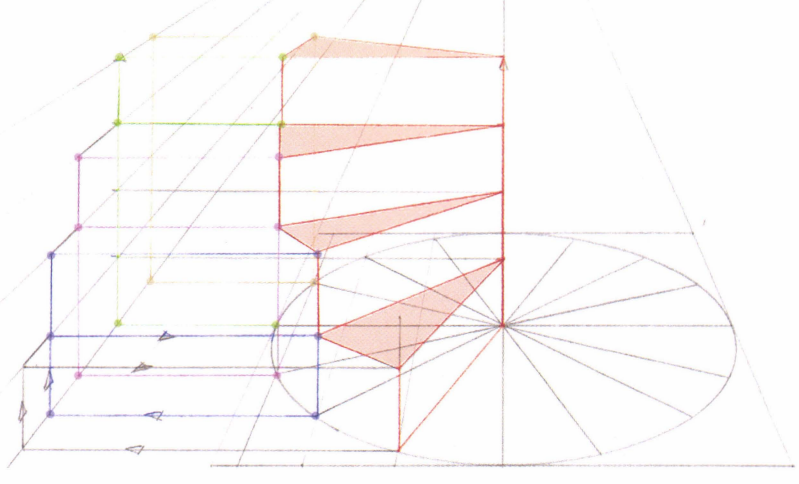

4. Continue this construction process for each step. This is the best way to draw a spiral staircase by hand. Sure, it requires more time and energy than using a 3D modeling program, and eventually a 3D-generated underlay can be used for the basic perspective grid, but knowing this technique will be helpful when it comes time to hand-draw details over a 3D underlay.

SHORTCUTS TO DIVIDING ELLIPSES

5-spoke wheel construction subdivision

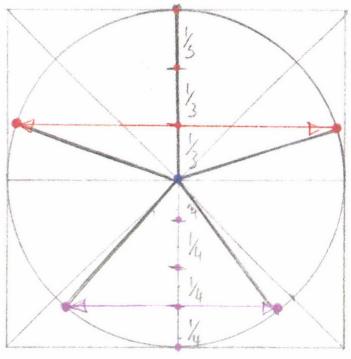

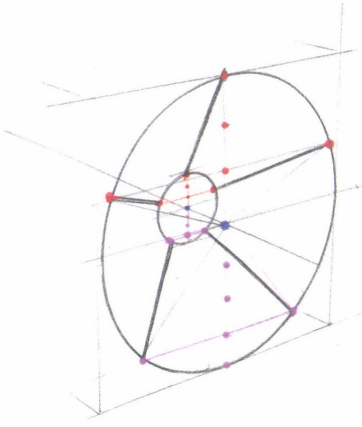

Ample time is not always available to create a full ellipse subdivision construction. So here's a quick way to calculate the placement of the spokes on a 5-spoke wheel for example, by finding a repeating proportion. First, divide the upper half of a vertical centerline into thirds, and the lower half of this line into quarters. Next, draw a horizontal line in perspective through the lower third point of the upper half and the lower quarter point of the lower half to create an intersection with the ellipse. This provides the endpoints for each of the spokes. Then, to locate the position of each spoke at the hub, in order to create the offset wheel center, repeat the same steps on the smaller ellipse located there.

Tread subdivision cheat

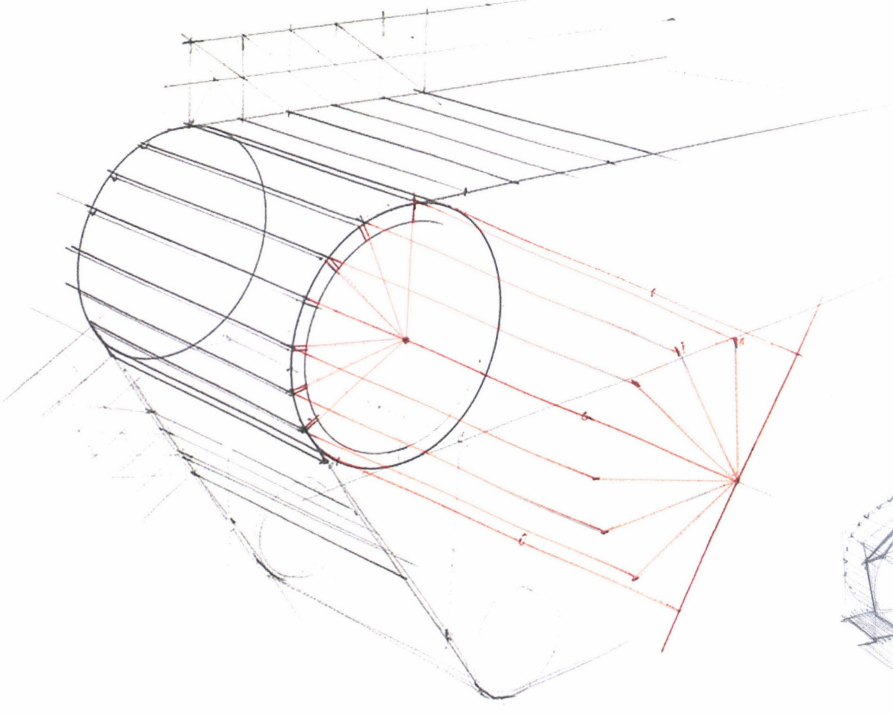

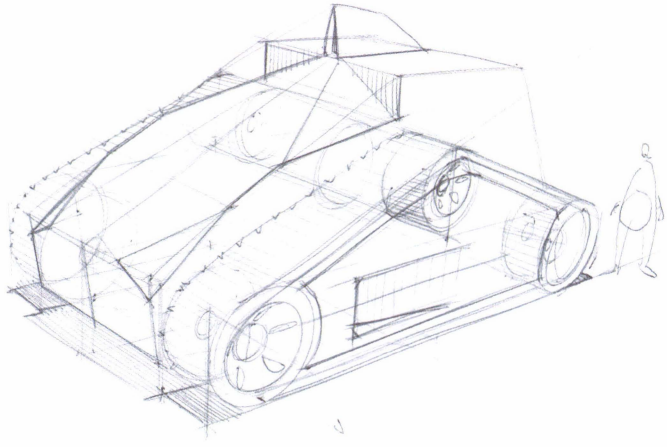

An ellipse was precisely divided in the earlier construction, but sometimes all that is required is to get the general look of the foreshortening of the spaces as they wrap around the ellipse. The perspective need not be technically correct, but it gives the basic visual result desired.

To do this, extend the minor axis with a parallel construction and subdivide from there instead of using the vertical line. This saves work, since the lines don't have to be turned back into perspective. This can be very helpful when speed is of the essence and it's not such an important detail that it needs to be technically correct in a quick sketch.

PLACING A CIRCLE ON A SLOPED SURFACE

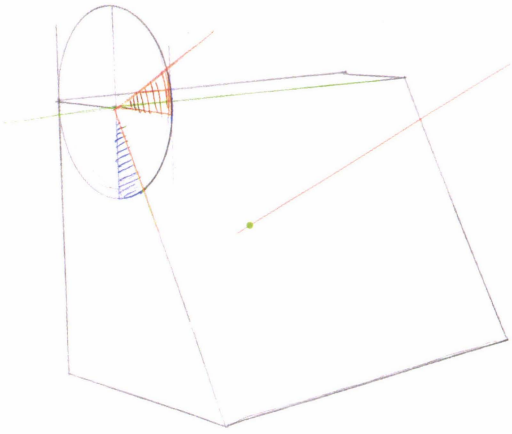

1. To place an ellipse on a sloped surface in perspective, the minor axis relative to the sloped surface needs to be determined. To do this, first draw an ellipse around the (green) edge of the box. The size does not matter, but ensure that all ellipse conditions are met. Next, quarter the circle by adding a vertical line, and a horizontal line, in perspective, going to the LVP. Observe how much the sloped surface angle has rotated from vertical (shaded blue). Now, look at the ellipse's horizontal line and estimate the same amount of rotation (shaded orange). This determines the angle of the minor axis for any ellipse drawn on the sloped surface.

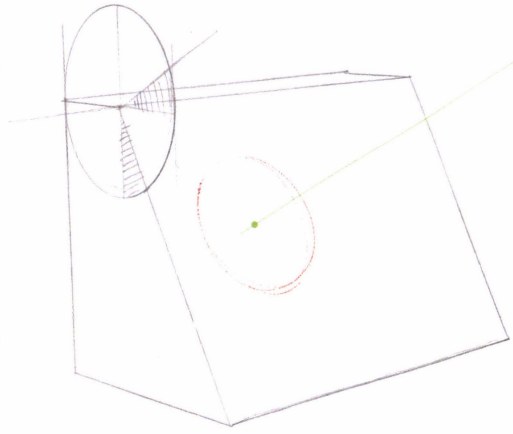

2. The minor axis line (green) is perpendicular to the surface. Draw a light ellipse around the minor axis taking your best guess as to what its degree should be.

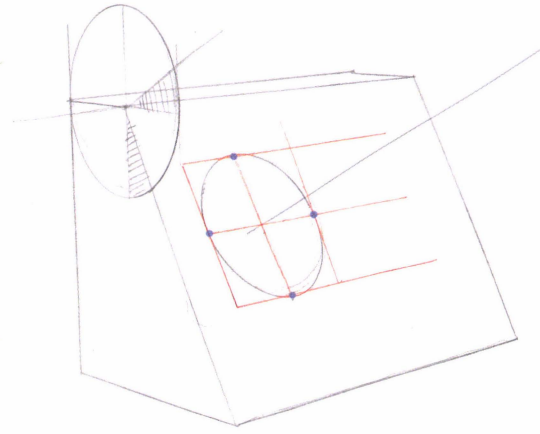

3. To check the degree of the ellipse, draw three sides of a bounding box, matching the perspective grid of the sloped surface. If the ellipse's tangency points intersect properly, then the degree of the sketched ellipse is correct.

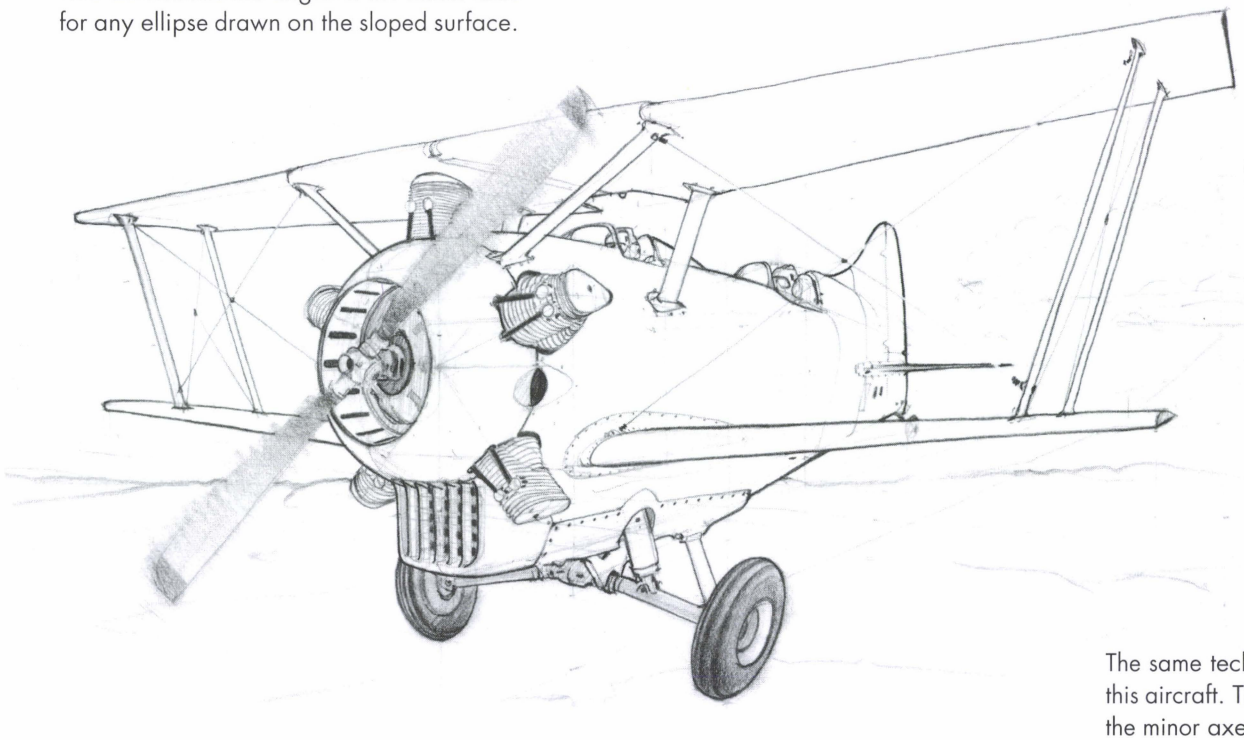

The same technique works for the wheels of this aircraft. The construction of the axles are the minor axes of the ellipses.

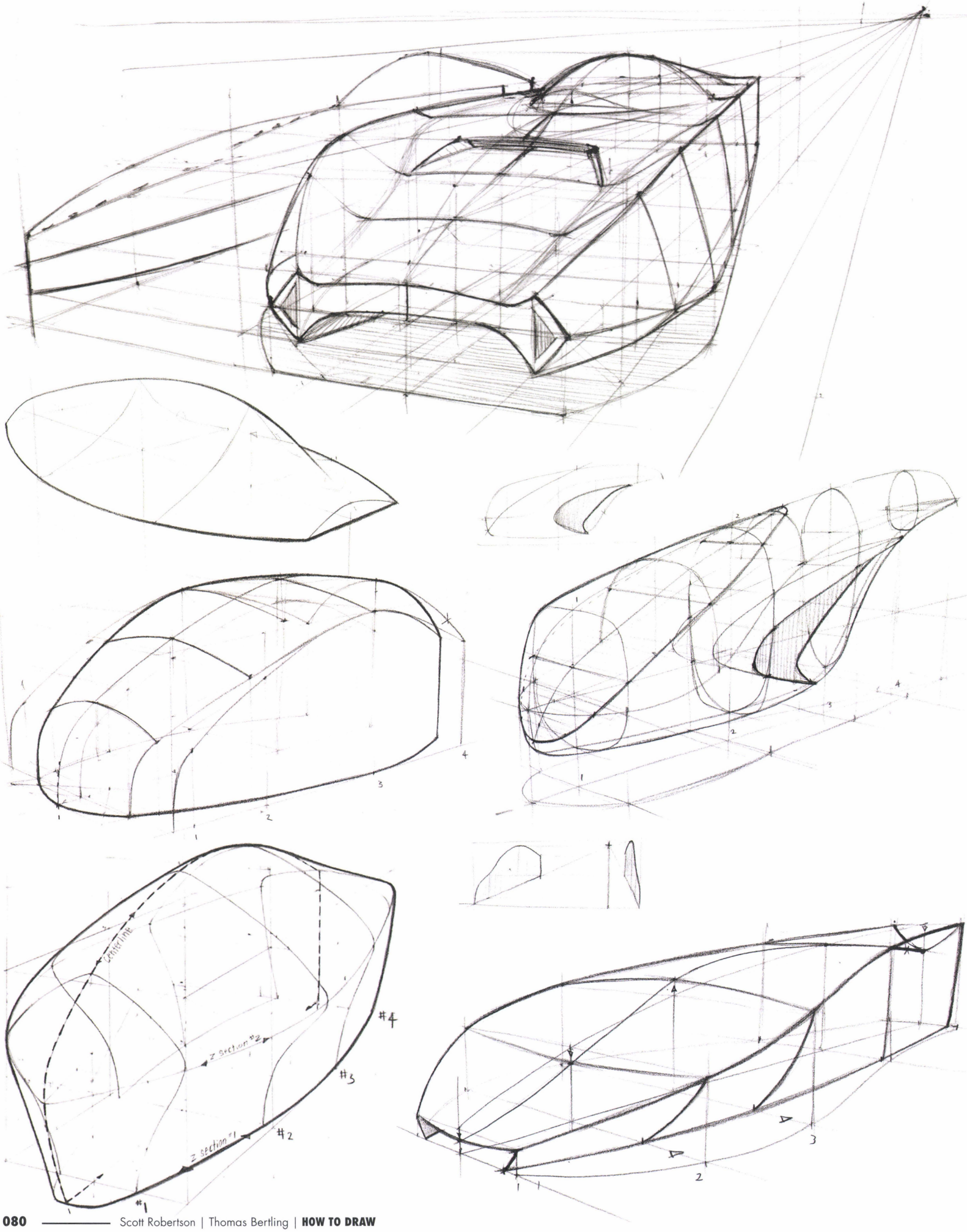
centerline
Z Section #2
Z Section #1
#1
#2
#3
#4

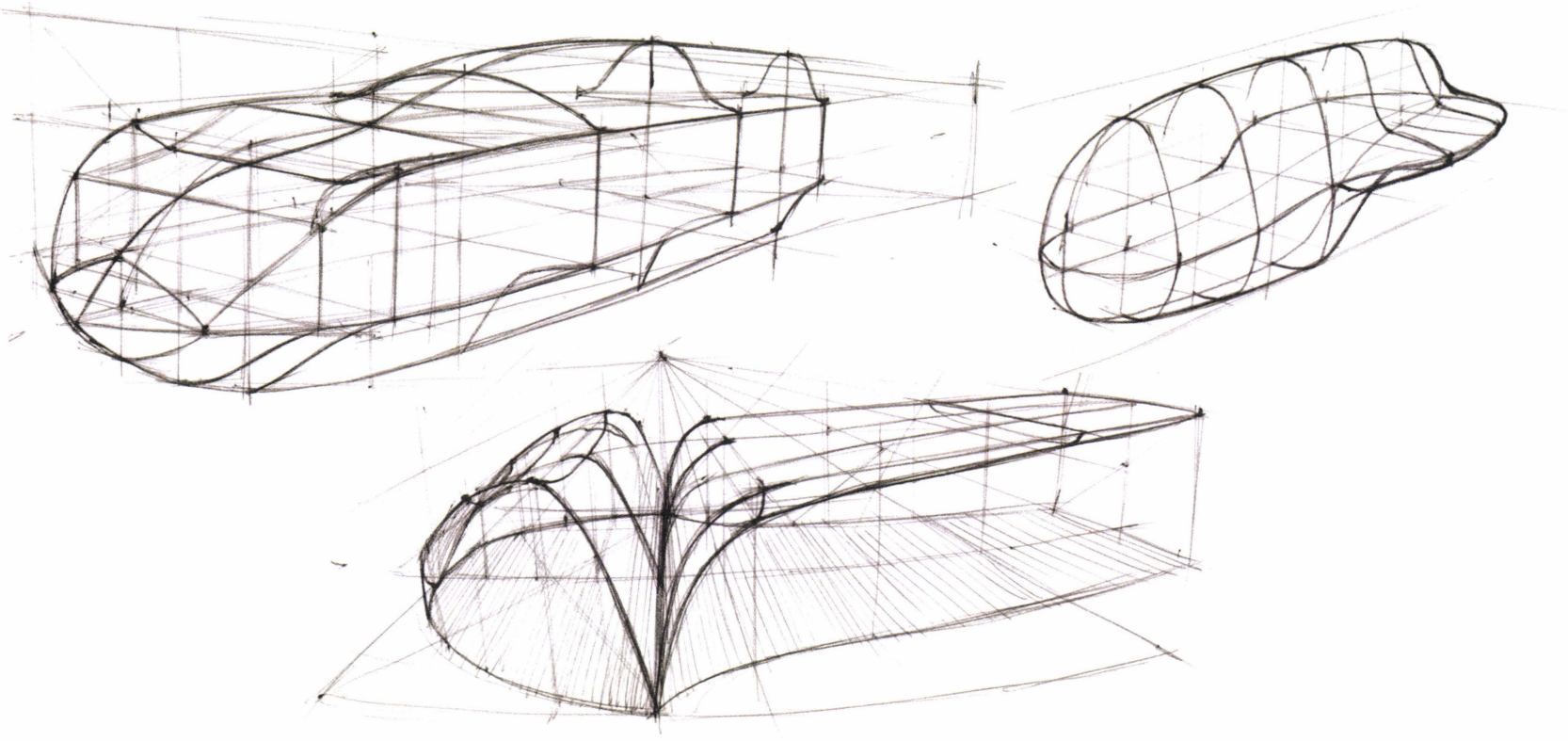

CHAPTER 06

WORKING WITH VOLUME

If you are most interested in drawing difficult symmetrical forms accurately in perspective, then this is the key chapter to study in this book. This chapter will break down and explain all of the most used and helpful construction techniques we know of to increase knowledge page-by-page until at the end of this chapter almost any form can be accurately drawn in perspective. We have observed with our students over the years that by tackling one facet of volume-building at a time and only moving onto the next level of complexity after each previous lesson was mastered, their understanding of form-building from their imaginations was greatly improved. All of the knowledge gained so far in this book will be used so, if earlier steps were skipped, this chapter may quickly become frustrating. Don't despair and throw this book across the room! Take a deep breath, pause, turn back to the section where more study is needed and review it again, having gained insight of how important the early basic exercises are to success in this chapter.

At the center of accurately drawing volumes in perspective is an understanding of "drafting" which is the skill of drawing the same object from multiple views without any perspective convergence. This might seem counterintuitive, but the way we are going to teach you to draw is very much like drafting multiple views of an object simultaneously in perspective. Taken step-by-step this method can become second nature in your drawing. After the ability to think up forms in a draft view is mastered, we will work in perspective and start to build out the form using sections, drawing on the X, Y and Z planes as defined by the perspective grids and guidelines. The accuracy of your curved surface volumes will be directly influenced by your ability to draw straight lines and to plot points using those straight lines.

X-Y-Z section drawing is the core skill necessary to master drawing complex volumes, such as the vehicles in later chapters. Drawing different forms requires a little deductive reasoning as to the best place to put the sections, but a lot of this knowledge will come from practice. When defining the surfaces of a volume in perspective, they can all be drawn more easily by using section lines. Now let's learn how to draw the foundations of all objects.

PLANNING BEFORE PERSPECTIVE

The type of section drawing that is going to be taught in this chapter can be done quickly in initial loose sketches but it can also be done very precisely which is much more akin to model building than illustrative drawing. For this reason it is a good idea to develop a plan by sketching several simpler views before jumping into elaborate perspective construction drawings. This is the "divide and conquer" approach whereby isolating specific aspects of an original idea and focusing on developing them using simpler drawing techniques saves time and leads to a stronger design before jumping into perspective drawing. Whatever you imagine the most clearly, draw it in a simple draft view, whether it's a side, top or front view. Doing this first will help establish the overall proportions without having to worry about things like foreshortening. Here are few loose sketches illustrating this approach.

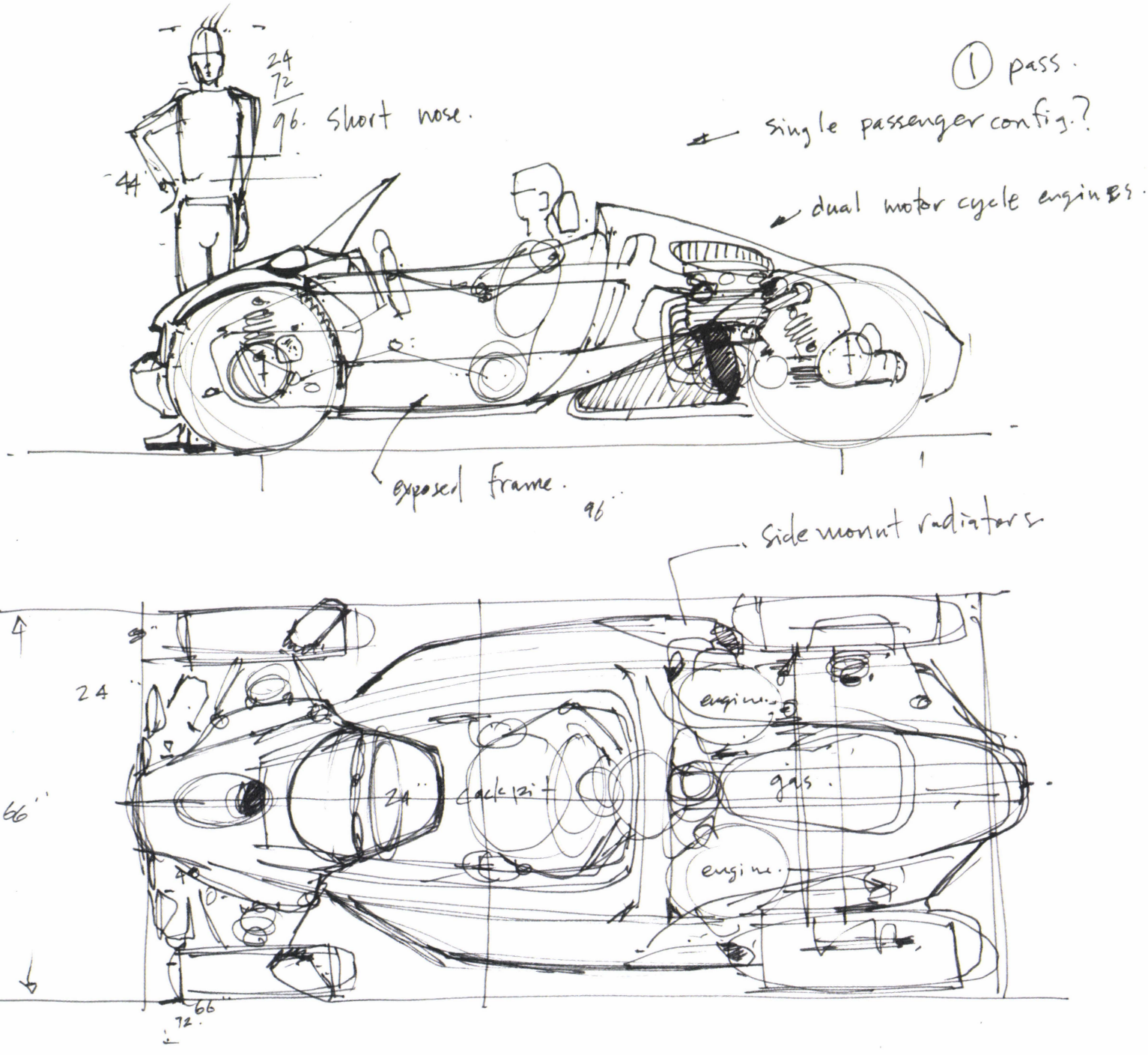

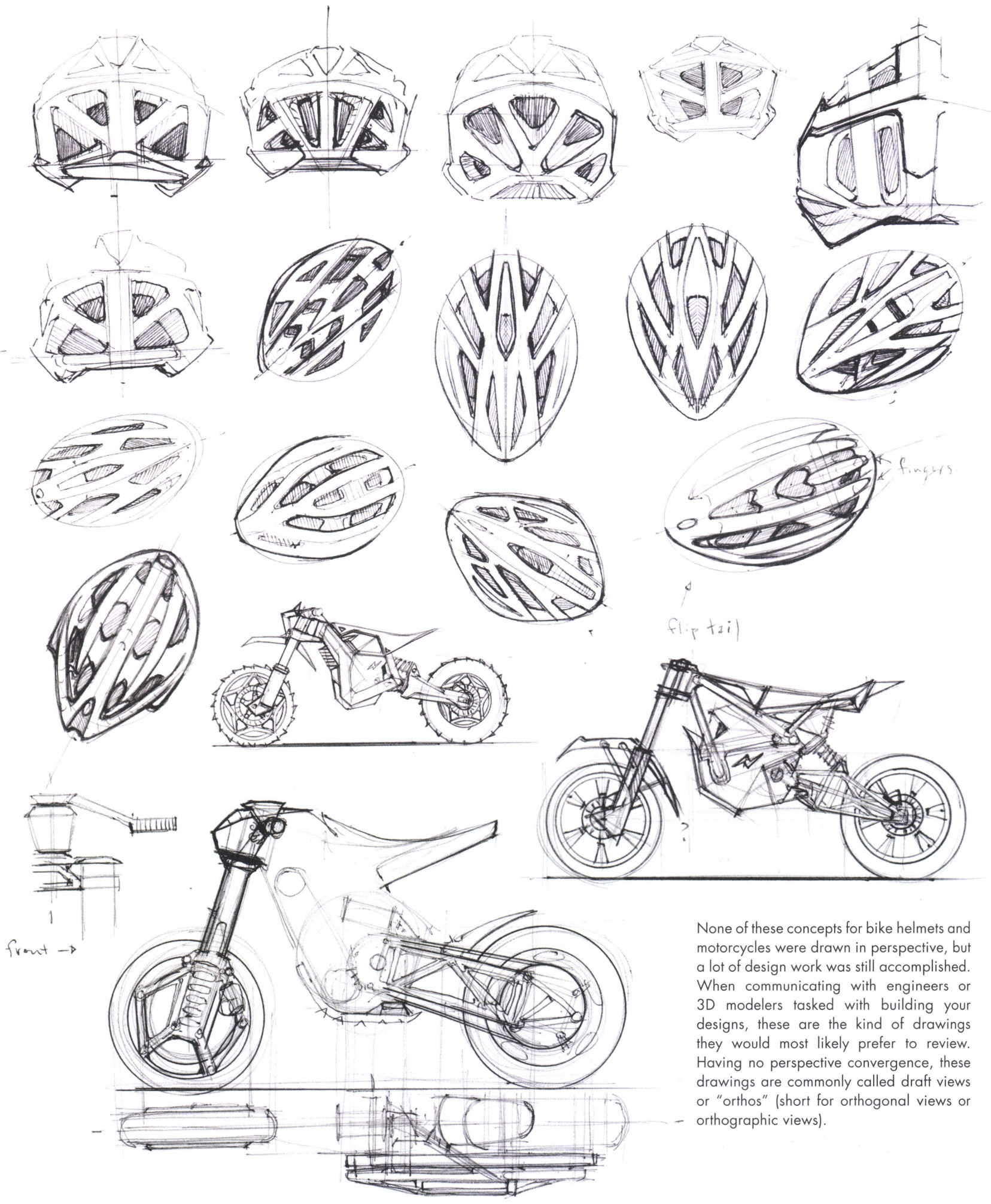

None of these concepts for bike helmets and motorcycles were drawn in perspective, but a lot of design work was still accomplished. When communicating with engineers or 3D modelers tasked with building your designs, these are the kind of drawings they would most likely prefer to review. Having no perspective convergence, these drawings are commonly called draft views or "orthos" (short for orthogonal views or orthographic views).

ORTHOGRAPHIC VIEWS, A.K.A. ORTHOGONAL VIEWS OR DRAFT VIEWS

Orthographic views of an object are seen from only one side without any perspective convergence. It's easy to add dimensions and make measurements on these types of images or drawings. For this reason they are often the types of drawings used by anyone building an object.

As shown below in the four views of the yellow car, the top, rear and side views are those from which measurements can be made. However, it is the ¾ perspective view that does the best job of communicating what the car will look like when built. This is why it is important to be able to do both types of drawings accurately. Since it is simpler to draw an object in an orthographic view, or "draft" view as they are also called, this is a good place to start the transition into perspective drawing.

One of the most important underlying techniques we use over and over again to help draw accurately in perspective is to think about the ortho views being projected onto X, Y and Z planes determined by a perspective grid. By simplifying this technique of drawing in perspective by focusing on one plane at a time, a much more accurate and complex perspective drawing of an object can be created.

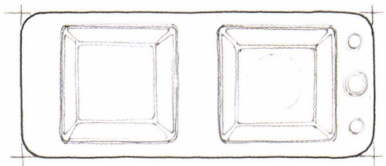

TOP VIEW

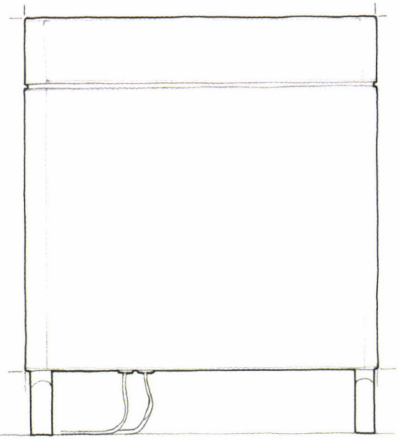

SIDE VIEW

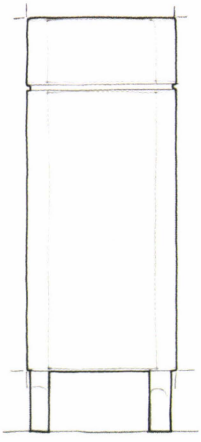

FRONT VIEW

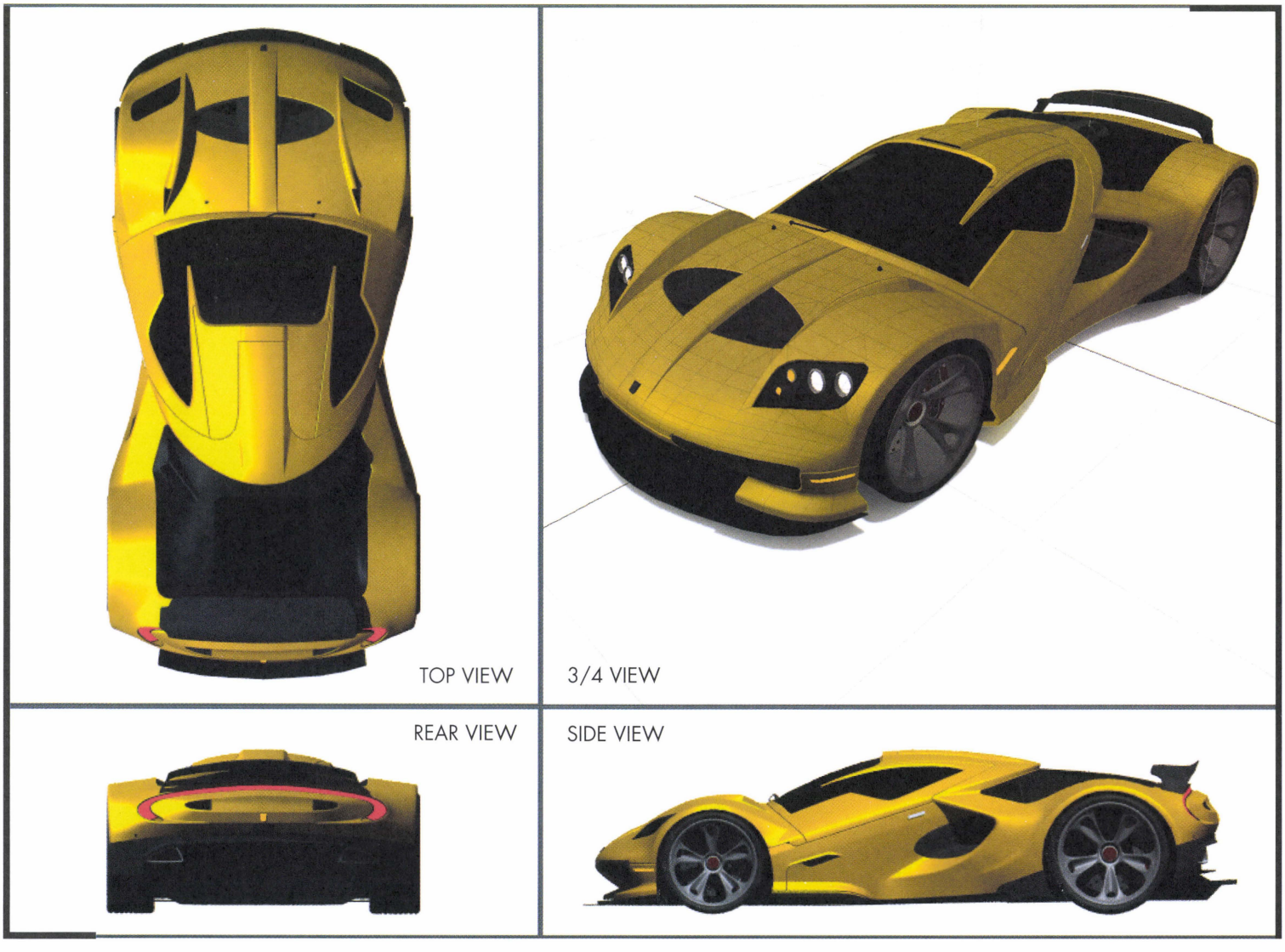

TOP VIEW

3/4 VIEW

REAR VIEW

SIDE VIEW

TRANSFERRING A SIDE VIEW INTO PERSPECTIVE

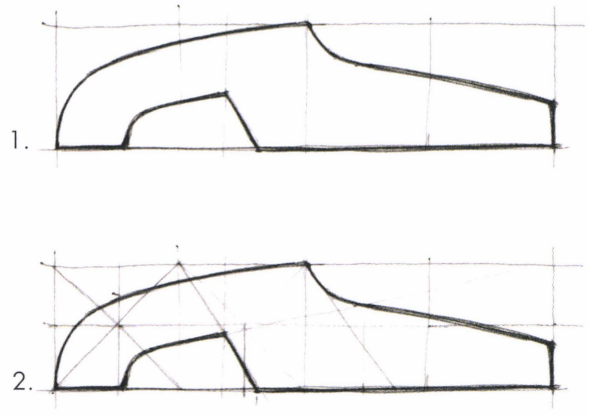

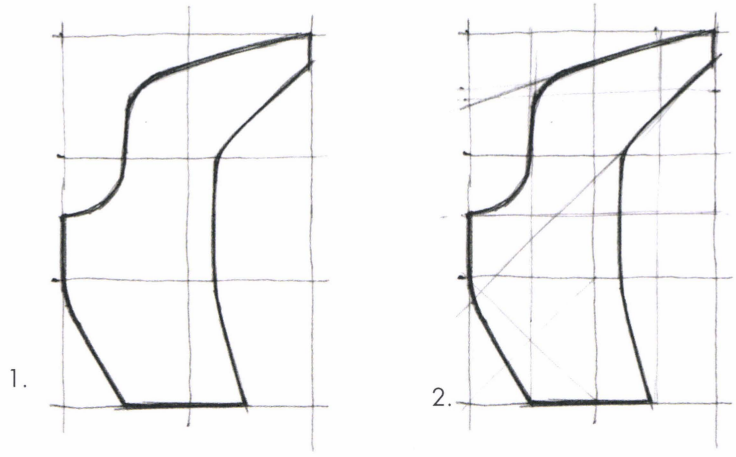

1. Create a bounding rectangle that can be divided evenly into squares. The example on the left side of the page is defined by a rectangle measuring 1 x 4. The one on the right uses a rectangle that is 2 x 3. Within the rectangle, draw a simple shape in side view. Conversely, you can draw the shape and then the rectangle, but the rectangle must always divide evenly into squares.

2. Add more lines to create more intersection points. Try extending the shorter sections of the shape to see where they would intersect the bounding rectangle. These can be a huge help when lightly added to the perspective planes and then used to sketch in the finished sections. Extreme foreshortening can be very difficult to predict, so creating more reference points makes it easier.

OK, it's time to transfer this simple side view into perspective.

3. Create a bounding rectangle in perspective with the same proportions as the side view. Use any of the techniques already presented to do this. The bounding rectangles can be made either in a computer program or by hand by multiplying a square in perspective. Getting this first step correct will make all the difference in the accuracy of the sketched shape in perspective.

4. Look for alignments and intersection points on the draft view that correspond to similar points on the perspective view. Look for intersections where the shape's lines cross the lines of the perspective-grid rectangles. After marking these simple alignments, add even more reference lines to both views. This makes it easier to locate even more points which facilitates drawing the draft view properly foreshortened in perspective.

The most important lesson here is that anything you draw in a draft view can also be drawn in perspective, once there is a bounding rectangle drawn over a precise perspective grid.

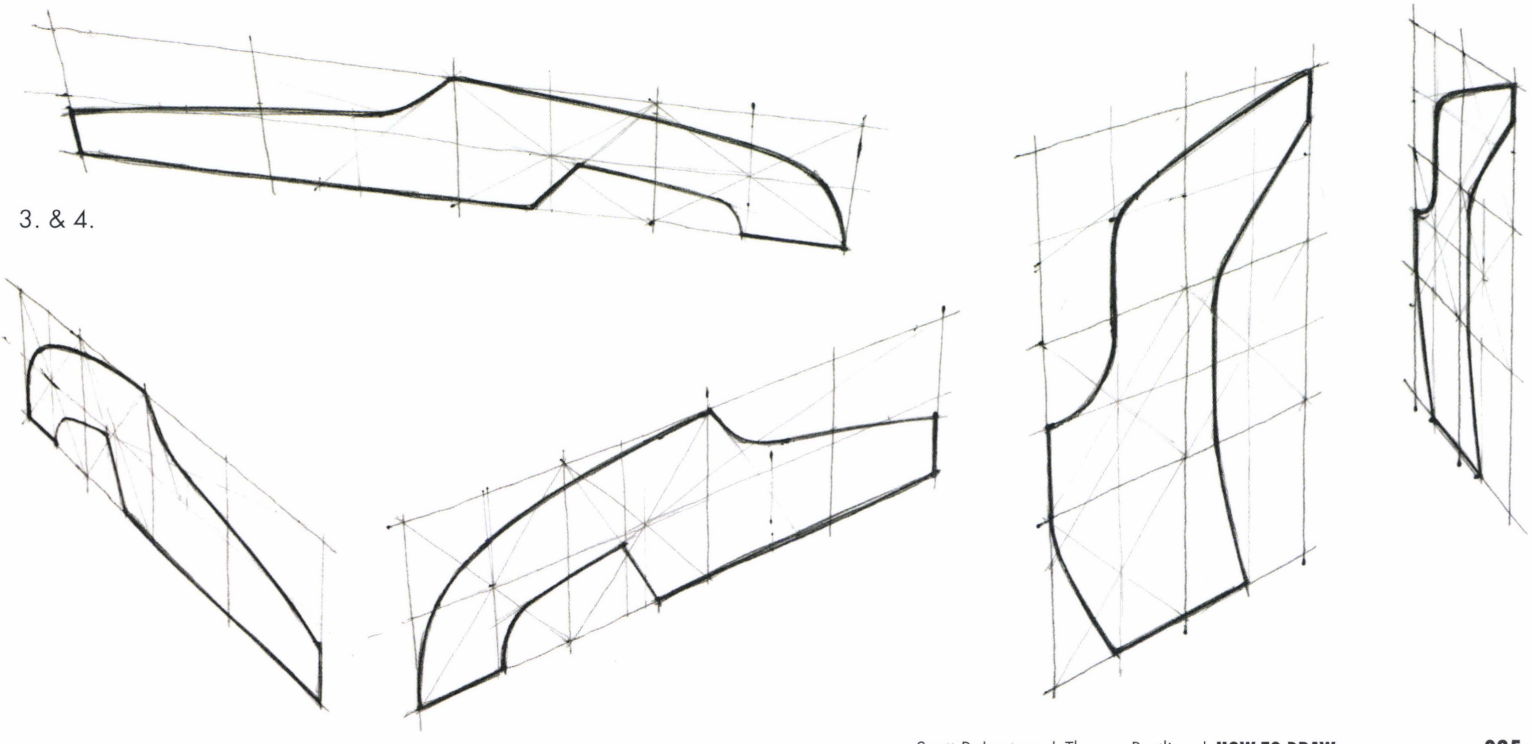

PUTTING IT ALL TOGETHER: X-Y-Z SECTION DRAWING

When drawing sections to define the volume of an object, imagine doing an orthographic view but on a foreshortened perspective plane. By drawing these ortho views on one perspective plane at time, the volumes become more defined with each additional section. The volume is basically being built from the inside out.

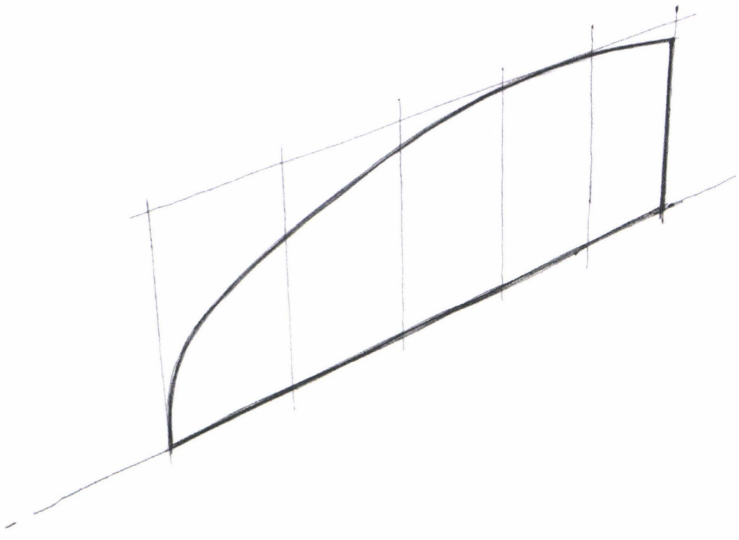

1. Start with a Y plane to define the centerline of the form. Draw the desired centerline on this construction plane. Remember, only focus on the silhouette of the side view of the form on this first plane.

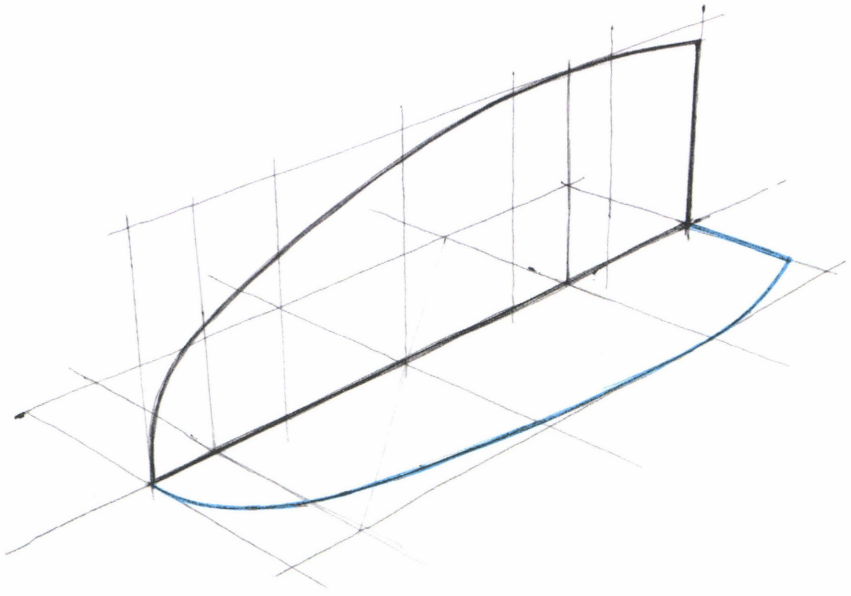

2. Define a flat plane that the volume will be sitting on by adding some perspective guidelines going to the Left Vanishing Point (LVP). Locate these guidelines at the intersection of the vertical guidelines and the bottom of the centerline. Determine the width of the top view by adding guidelines going to the Right Vanishing Point (RVP). Mirror the width and then draw the top view on the Z plane, (blue line). The lines on the Z plane going to the LVP will be the location of the X sections.

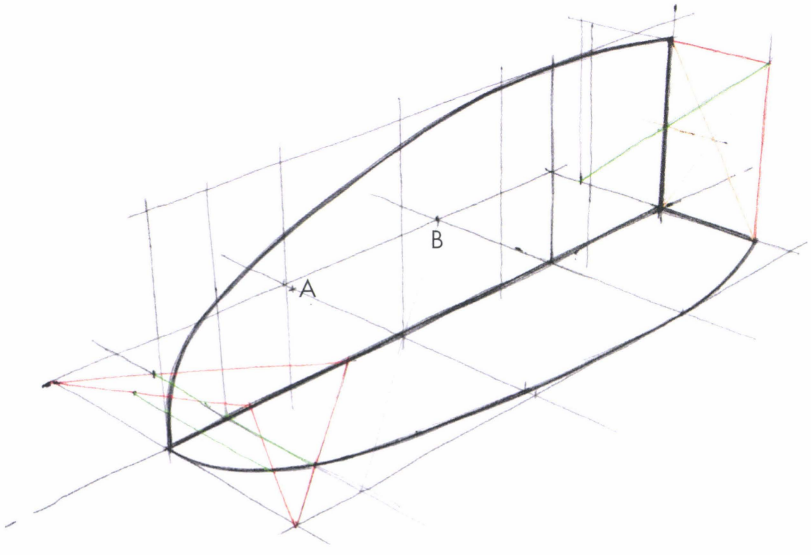

3. Mirror the top view to the far side of the Z plane. This could have been drawn first and then mirrored to the nearside; it makes no difference. Usually it's drawn on whatever side of the form can be visualized more easily. The diagonal mirroring method was used at the front of the form and the rectangle method at the back. Points A and B were approximated by referencing the outside of the bounding rectangle of the top view.

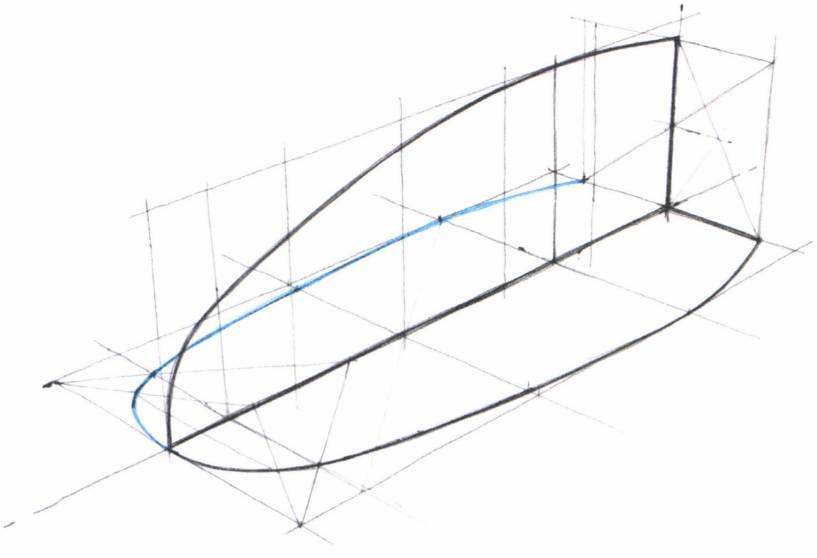

4. Sketch a line of the mirrored top view as accurately as possible through the reference points that have been mirrored (blue line). Don't trust the accuracy of the mirrored points to a fault, meaning that if the first half of the top view is a smooth line without any kinks in it, then the mirrored line should also be a nice smooth curve. Since this is a hand-drawn sketch, the mirrored reference points might be slightly off, so keep that in mind when drawing the mirrored line.

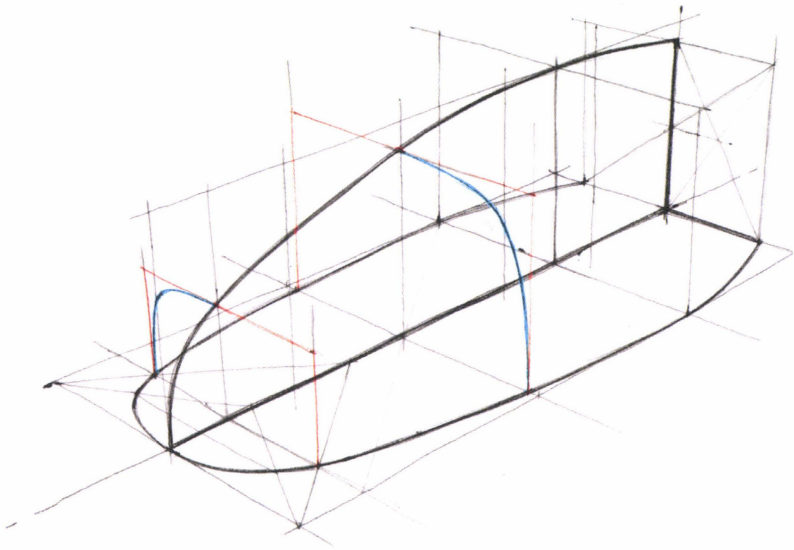

5. Backtracking for one moment. When the top view was drawn in Step 2, the only constraint was that it had to line up and intersect the centerline at the front and back where the centerline sat on the Z plane. Aside from intersecting the centerline at these points, the top view can be any shape at all. It can even extend past the length of the side view but it has to return back to match the centerline length where it touches the Z plane. Now it is time for the last step in the section drawing before outlining the silhouette of the volume. Add X sections at any of the section locations defined by the perspective guidelines crossing the Y and Z planes (blue lines). They can be sketched on either side of the centerline; just sketch one half for now.

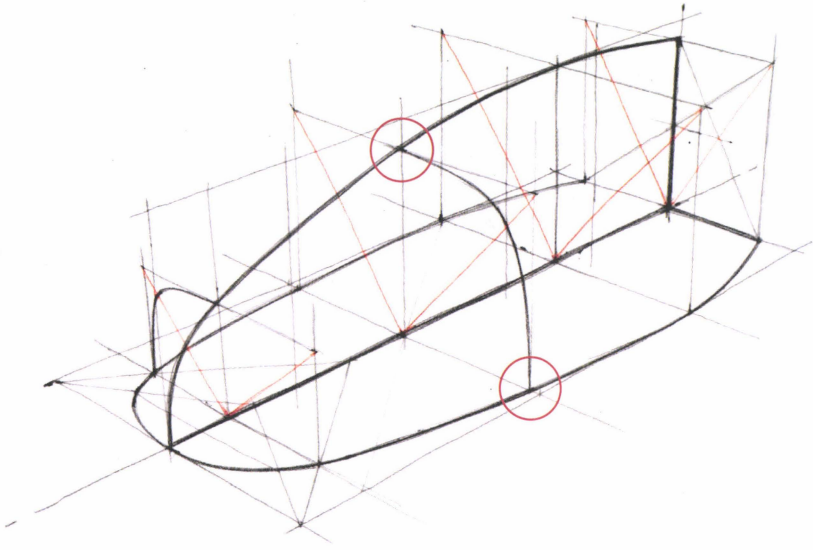

6. Just as the Z plane had to intersect the Y plane centerline at the front and back where it touched the Z plane, the X sections also have constraints. They can be any shape but they must intersect the Y and Z planes at each end as defined by the perspective guidelines going to the LVP on the Z plane, and by the verticals on the Y plane (circled in red). Every X section added has this same constraint and relationship to the Y and Z plane lines that have already been drawn. If the X sections had been drawn first, then the Y and Z sections would be constrained to the X sections, but it's much easier to make, smooth forms by drawing the longer sections first, which in this case are side and top views. Above, the diagonal method was used to aid in the mirroring of the X sections.

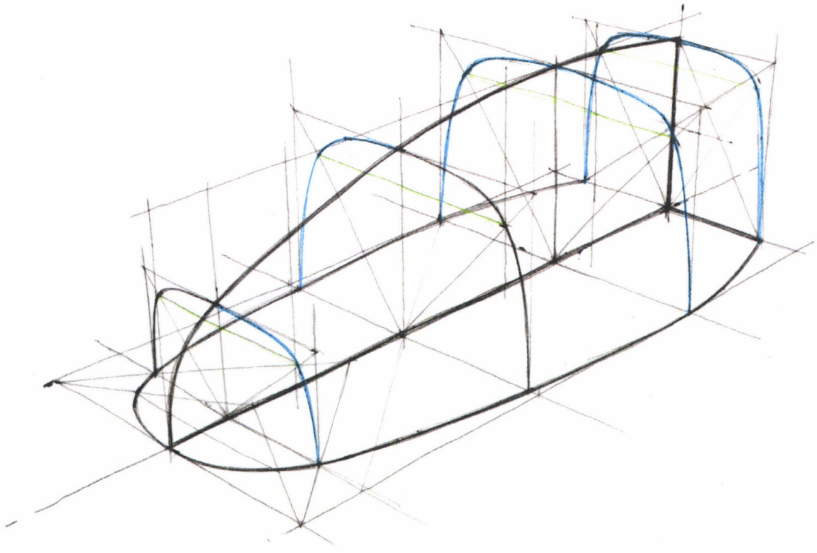

7. Add and mirror the remaining X sections. The light green lines going to the LVP were used to transfer reference points from where the diagonals intersected the X section lines. Always look for the easiest perspective construction possible using the lines that are already in your drawing. This keeps the number of lines to a minimum, resulting in a cleaner construction drawing.

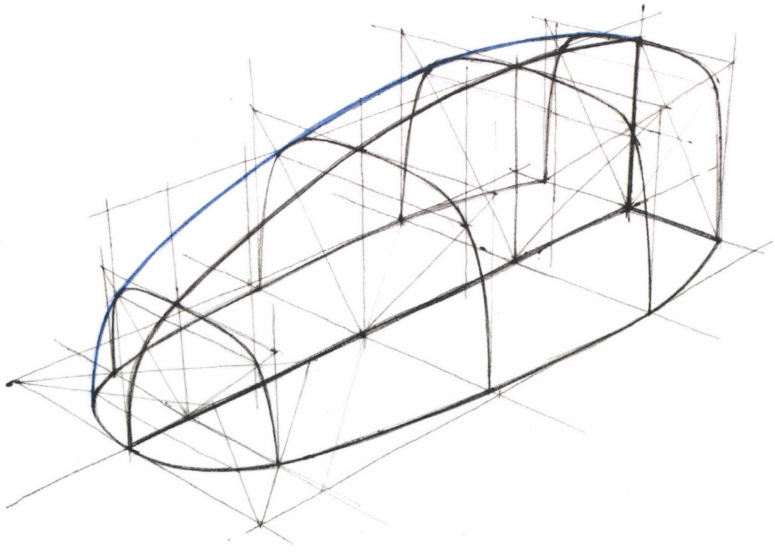

8. The X-Y-Z shape comes together with the drawing of the last line – the silhouette line. The silhouette line of an object is very important, as it is usually the strongest line with the most contrast and width, conveying the overall form of the object. For this example, draw a line that touches tangent to all of the section lines and defines the outermost shape of the volume. Above, the silhouette starts as the top view, goes up to touch tangent to the first section, then the next and the next, until it becomes the last X section at the right before returning to the top view again.

EXTENDING THE SECTIONS

A useful way to think about these types of section drawings is that they are "working drawings" and can be endlessly massaged and modified into new forms. They are much more about building volumes, like in a physical or digital model, and much less about making nice illustrations. To make a nicer looking illustrative drawing, an overlay of the working drawing can be made. They don't take long and there is an example at the end of the airplane-drawing chapter on page 151. Now let's take the last example and modify it to expand its volume.

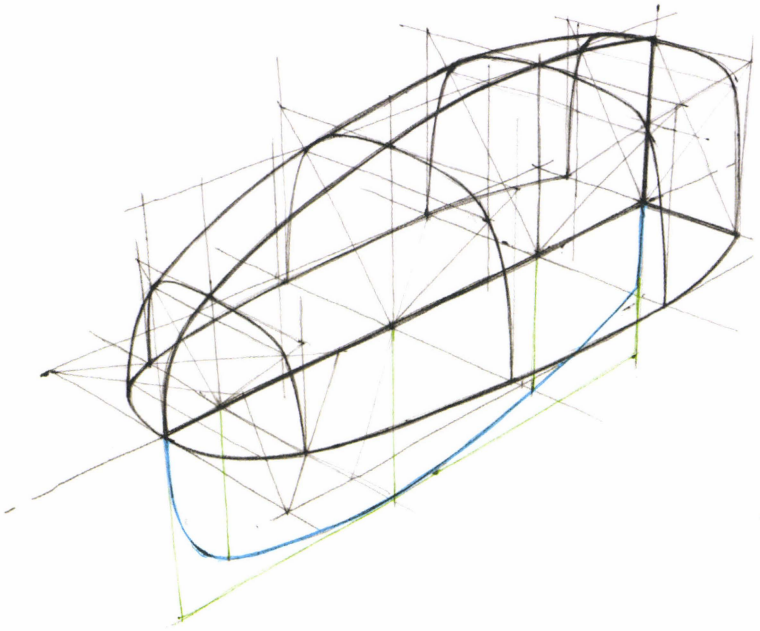

1. Extend the grid by drawing a few perspective guidelines (green lines), then draw the extended centerline for any shape desired. The only constraint is that it must intersect the original centerline at the front and back where it touches the Z plane.

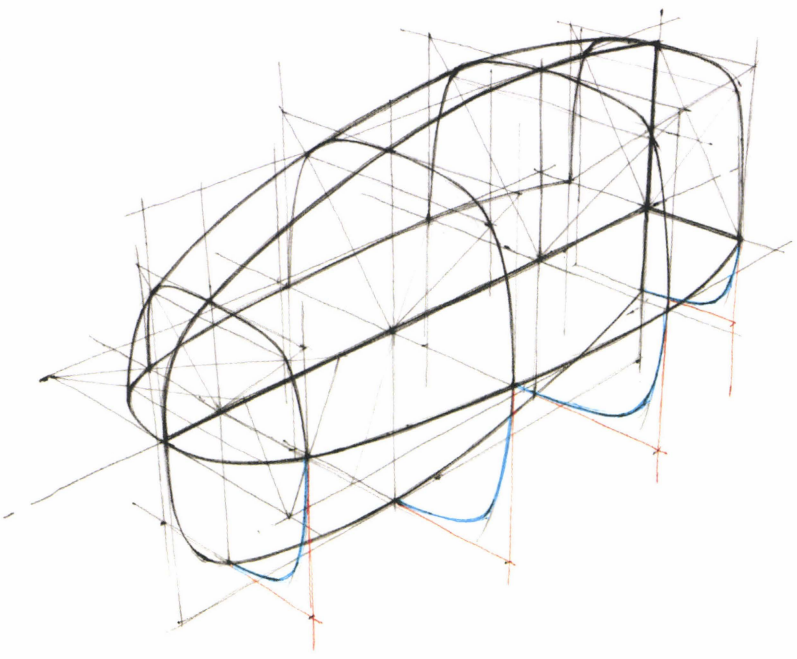

2. Extend the X section lines into any shape, but they must end at the new centerline of the lower half of the form.

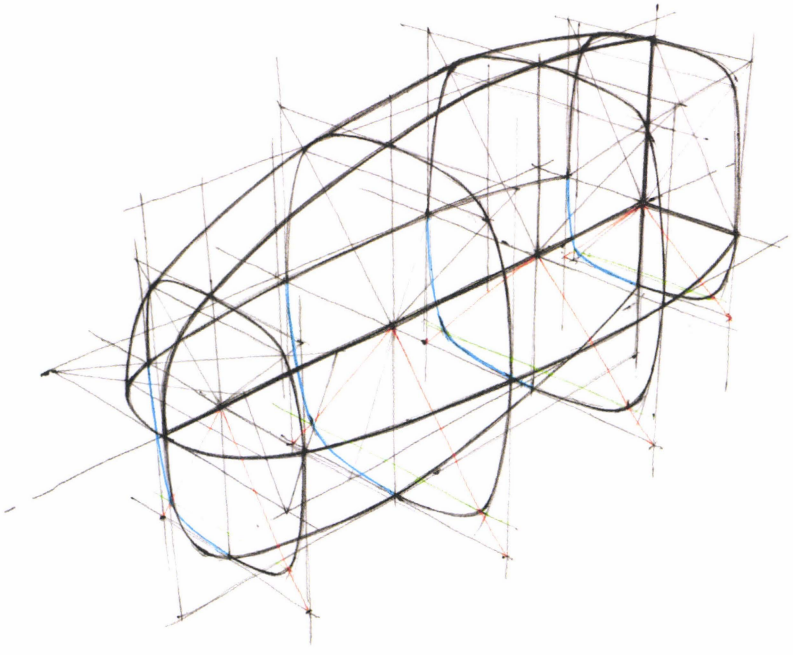

3. Mirror the X sections over to the other side. Here, the diagonal method is used again. The steps and constraints are exactly the same as on the previous pages, except now the drawing of the X and Y sections are inverted.

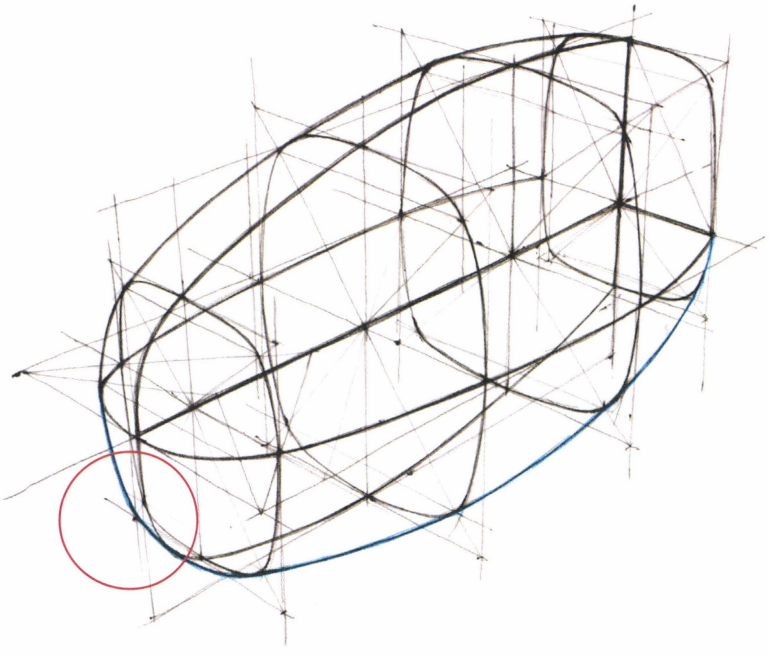

4. The silhouette of the extended form can now be drawn with more confidence. When drawing the silhouette, look carefully at the section lines that are contributing to it. See that the far side of this silhouette needs to bulge out a bit after it crosses the centerline due to the squarish influence of the first X section on the far side.

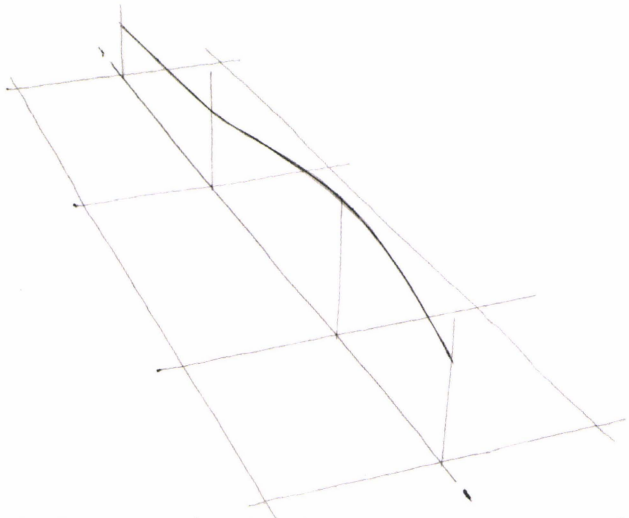

1. 2-curve combinations in perspective are some of the most commonly found features on all sorts of objects since so many objects are symmetrical. Start with a perspective grid and a centerline. The foreshortened width of the Z plane was already done in the grid used here as an underlay.

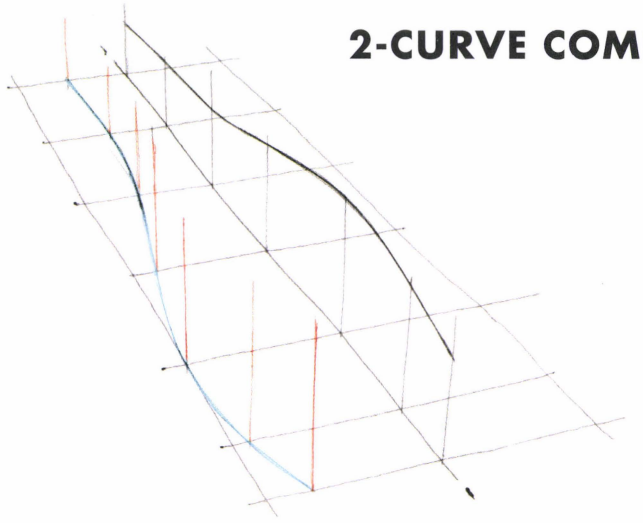

2. Sketch the top view of one half (blue line) and extend vertical construction lines where the X sections cross the top-view line.

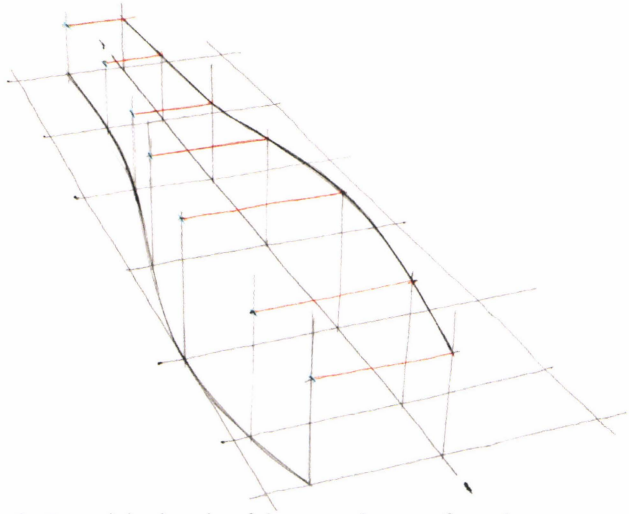

3. Extend the height of the centerline out from the top view (red lines) to intersect these verticals, thereby creating reference points used to help draw the combination line of the two curves.

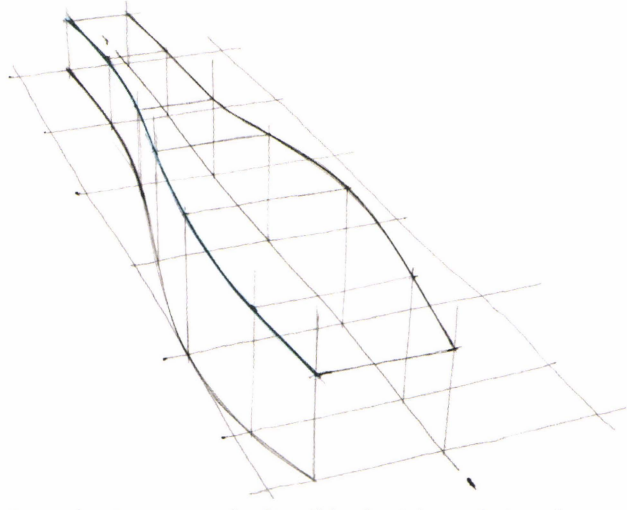

4. Draw the 2-curve combo line (blue line) through the reference points.

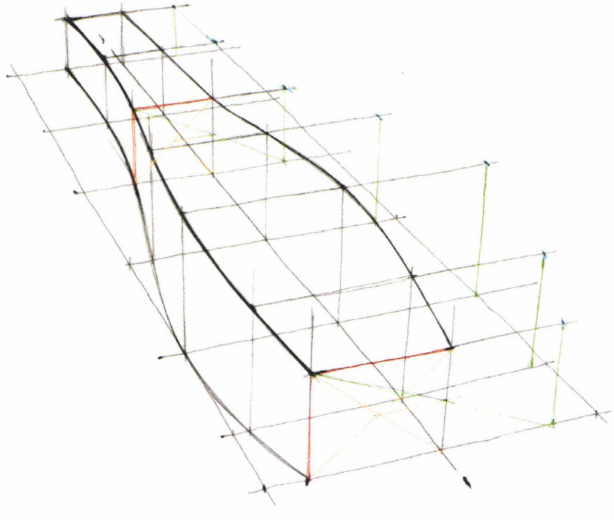

5. Mirror the 2-curve combo line over to the other side. A few rectangles were used to find some reference points and the rest were guessed at by referencing the top-view, Z-plane bounding rectangle.

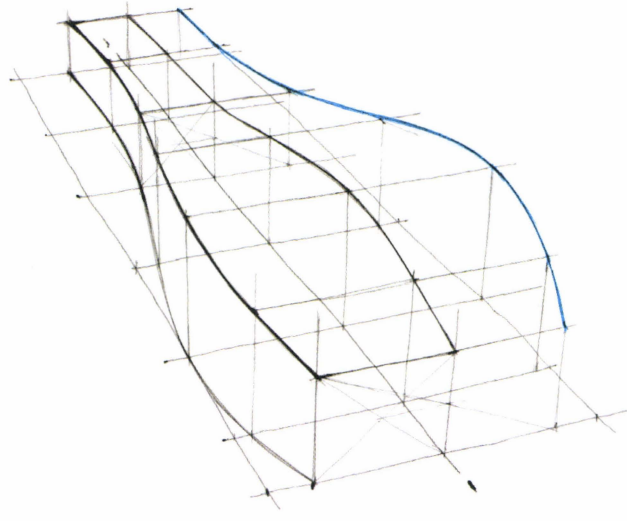

6. After plotting the mirrored reference points, draw the mirrored curve. Look at how different the mirrored curve looks compared to the nearside curve. This is why it is important to master this construction!

CUTTING VOLUMES

Cutting holes out of volumes uses the previous section-drawing techniques. This is because the easiest way to project one shape onto another is by using section lines and then looking at where they intersect to locate points that can be used to draw the resulting edge of a hole.

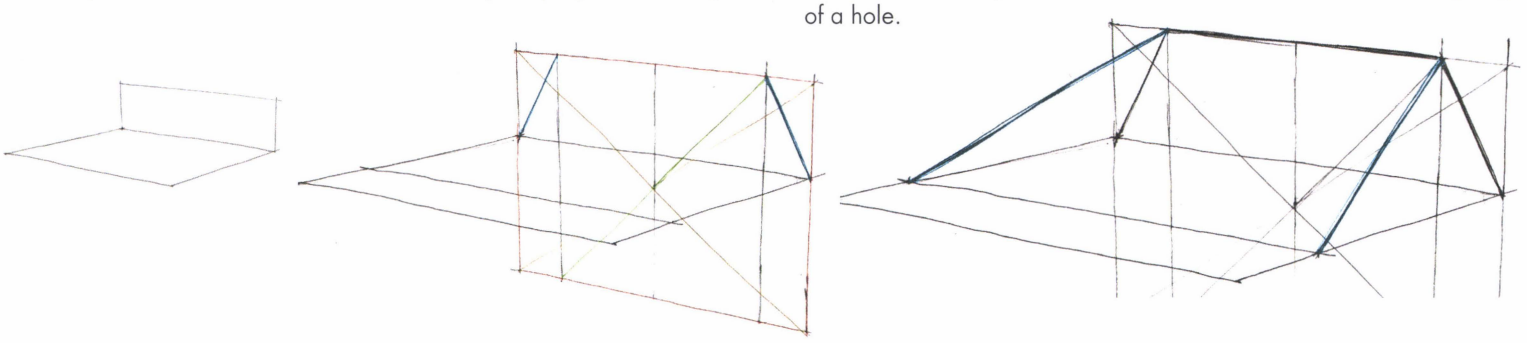

1. Draw a grid with a vertical plane and a horizontal plane.

2. Draw a basic rectangular plane (red lines) with two angled X sections (blue lines).

3. Connect the narrower top edge to the flat ground plane (blue lines). This tapering plane construction happens to be the basis for constructing the windshield of a car.

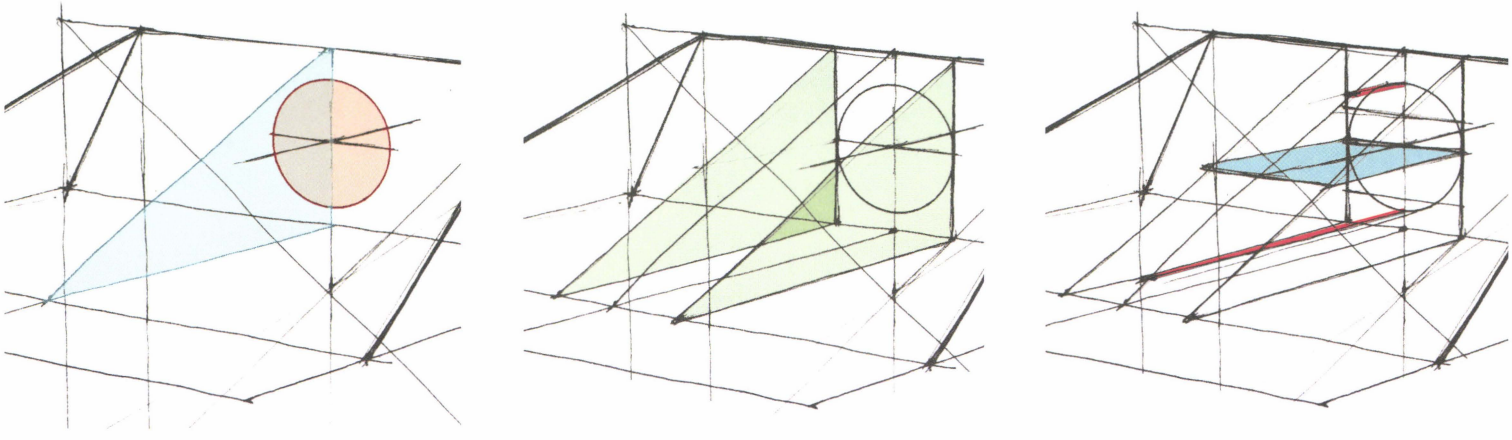

4. Place an ellipse on the vertical plane (shaded red). Place a Y section on the center of the ellipse (blue triangle).

5. Place two more Y sections that are tangent to the ellipse to the left and the right (green triangles). This projects the width of the ellipse into the inclined plane.

6. Project a few points from the ellipse along the Y-axis until they intersect with the section lines of the inclined plane. Use lines or planes to project forward (red lines or blue plane). Either method works, as they are basically the same thing.

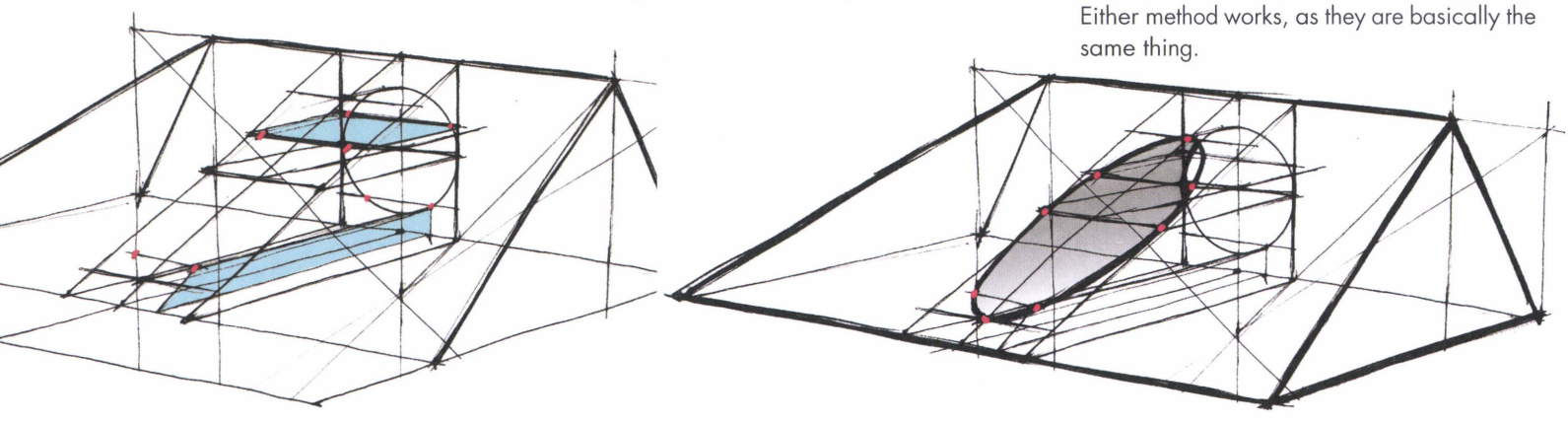

7. Slice up the ellipse with a few more lines to create more points to project forward, again along the Y-axis. Horizontal or vertical construction planes can be used as they transfer the points equally well. Use whichever planes are more visible. Once a point has been projected forward, it can be mirrored to the other side of the centerline.

8. Lastly, sketch a curved line through the projected points (red dots). The hole has now been cut into the inclined plane (shaded grey area). This is a straight Y-axis projection, so that if the object were viewed orthographically along the Y-axis the cut hole would be a perfect circle.

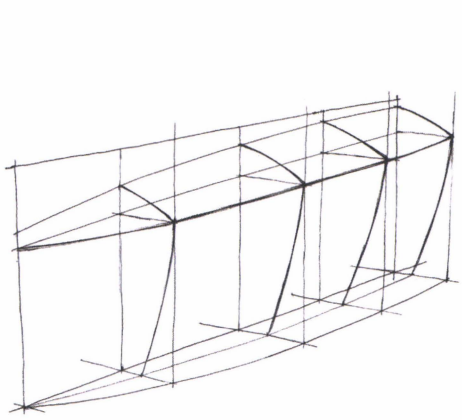

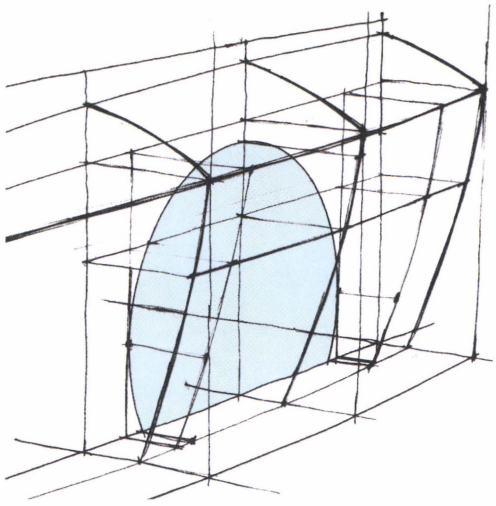

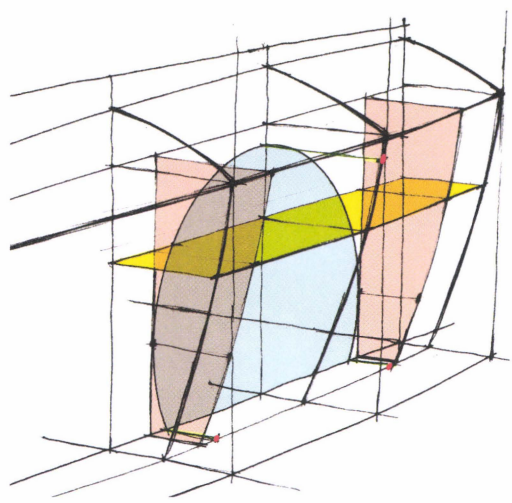

1. For this exercise, begin with a more complex volume as described by a series of section lines. This construction happens to be the one used to cut a wheel well into the side body of an automotive form.

2. Sketch the shape of the hole to be projected into the curved surface; (shaded blue area). The curve to be projected should be on a flat construction plane, perpendicular to the direction in which the curve will be projected. In this example, it is on the flat vertical surface defining the far side of this volume.

3. Construct three new sections, two X and one Z, at strategic spots to help project the cutting curve onto the outer surface of the volume. Locate the X sections (orange) tangent to the widest dimensions of the projection curve and place the Z plane (yellow) a little higher up to provide two more reference points for the resulting cutout. When drawing these sorts of cutouts, a little deductive reasoning, practice, and some trial and error will be necessary when locating the additional construction planes at the most helpful positions. Just remember, add a section wherever an additional reference point is needed to help draw the projected curve.

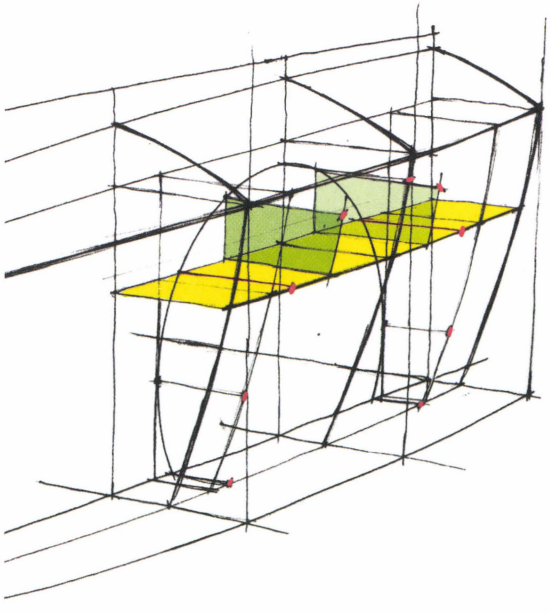

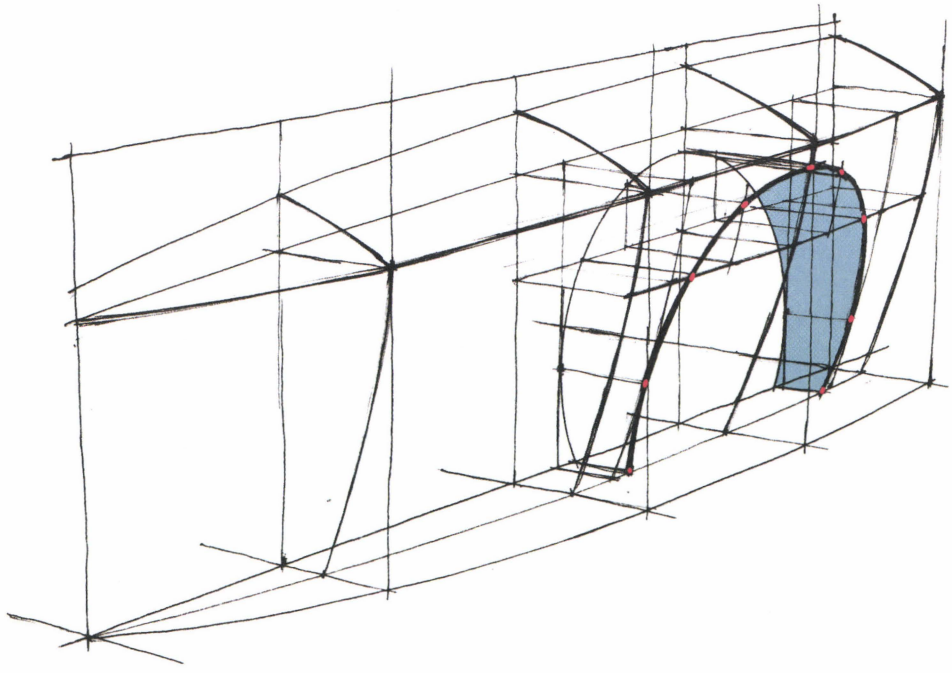

4. Transfer the intersections of the new section planes and the desired cutting curve outward along the X-axis until they intersect the outer surface of the form, creating reference points (red). Add the partial X section planes (green) to help locate two more points before sketching the curve.

5. Finally, sketch a curve through the reference points. This curve results from projecting the cutout curve onto the outer surface of the volume. The shaded area (aqua) is the new surface created by this perspective construction. This basic concept of projecting a curve along a projection axis onto another surface using section lines is used over and over again to calculate much more complex curves wrapping across a surface, as will be seen in the following pages.

ADDING RADII AND FILLETS (FIL'-ITZ)

It is common to blend two intersecting planes with either a radius or a fillet (pronounced "fill it"). A radius connects the planes with an outward curve, and a fillet connects the planes with an inward curve. A radius removes volume; a fillet adds volume. The concept is relatively simple; think of the corners of a box becoming one-quarter of a cylinder running the length of the corner. However, this requires a lot of ellipse constructions, usually on multiple planes. Let's break it down step by step.

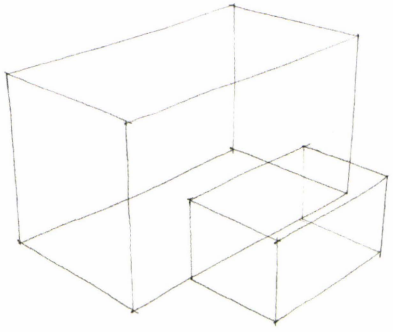

1. Start with two boxes to blend together. Decide what corners to radius. Remember, a radius removes volume.

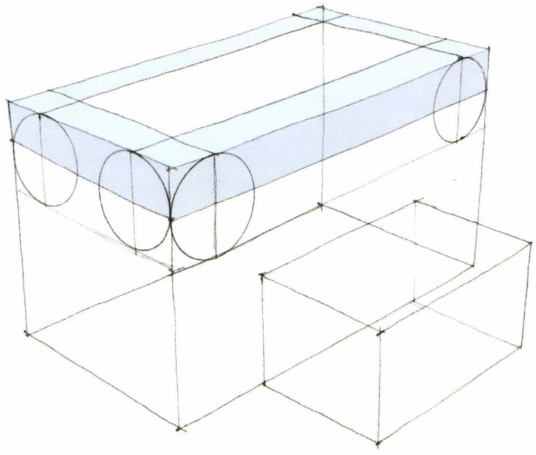

2. Draw ellipses on the sides of the box as if they are the ends of cylinders running parallel to the corners you want to radius. Draw the tangencies of these cylinder surfaces on the sides of the box (blue).

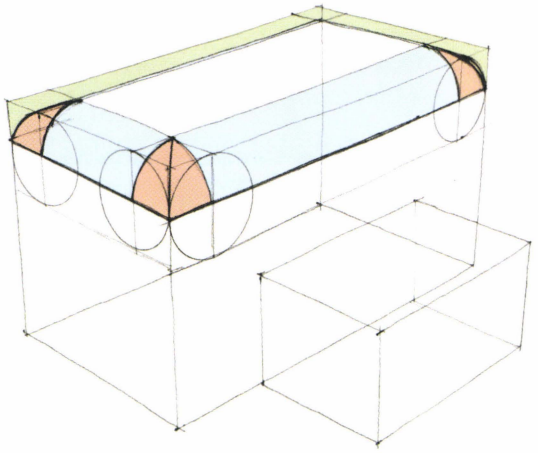

3. The red highlights the corner parts, which are still part of the quarter cylinders. The green shaded area is what the radii have cut off.

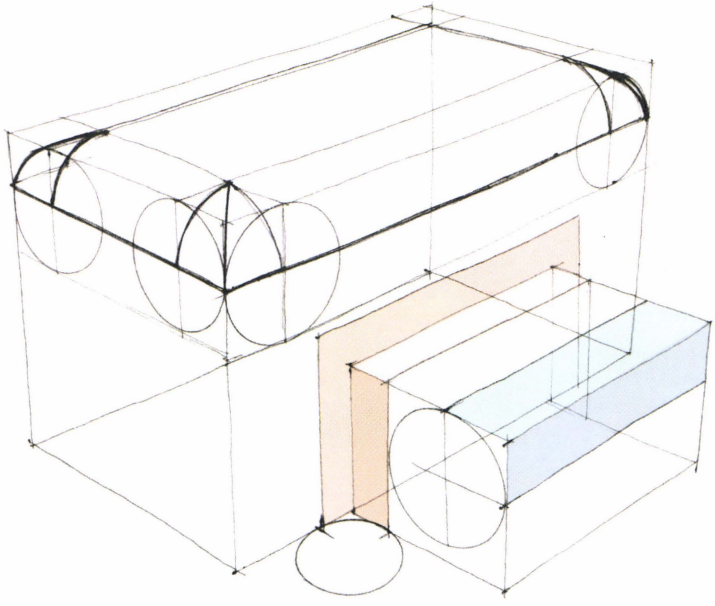

4. Now add a fillet, and therefore volume, to blend the two box forms together. Use the same drawing technique; draw ellipses that touch tangent to the surfaces of the boxes, indicated by the red zone for the fillet and the blue for the radius.

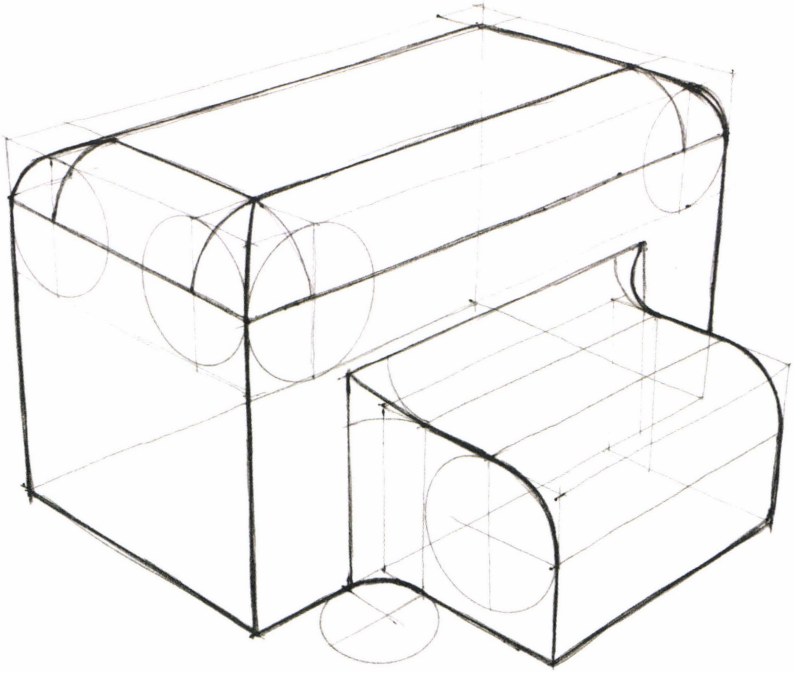

5. Extend the fillet vertically until it intersects with the one running horizontally, blending the top of the small box with the side of the larger one. A hard edge that is an extension of the original corner is created by this intersection of the two fillets. Add extra line weight to define the final hard edges.

Wrapping graphics onto an object is a different construction than projecting shapes onto a surface for the cutting of volumes. This construction is like wrapping a label on a bottle or adding a sticker onto a surface. These stickers do not stretch, so the bending of the sticker around the surface needs to be factored into the construction, which adds more complexity.

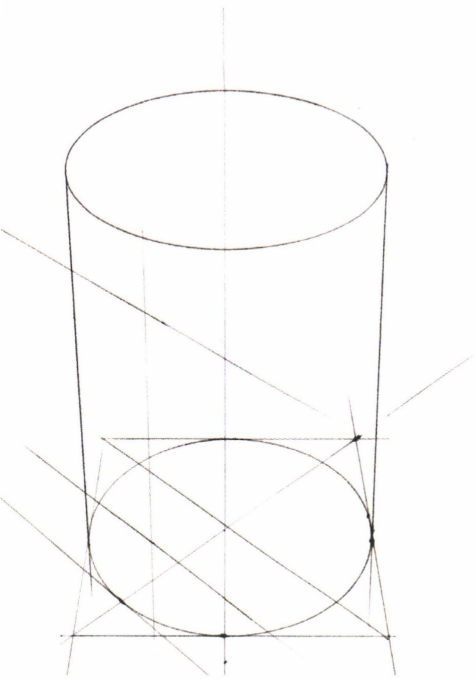

1. Start with a volume that the graphic will wrap onto. It helps if the sections of the form are defined, as these will be the key in helping to do this construction.

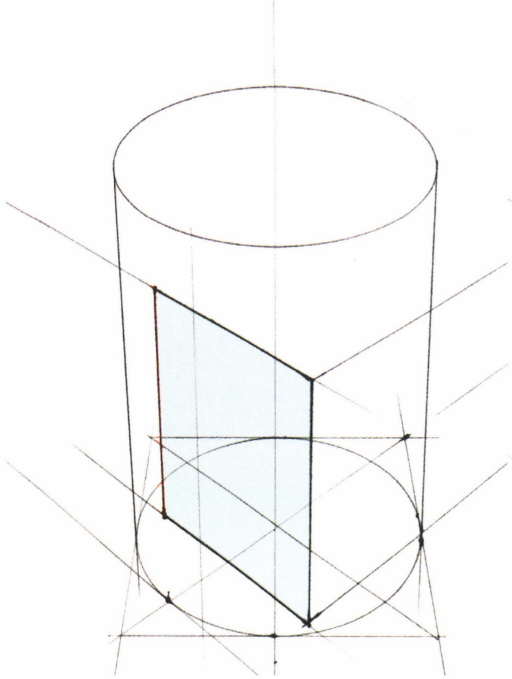

2. The blue plane is floating in space here with its left edge touching the surface of the cylinder at the red line. The goal is to bend it across the surface of the cylinder.

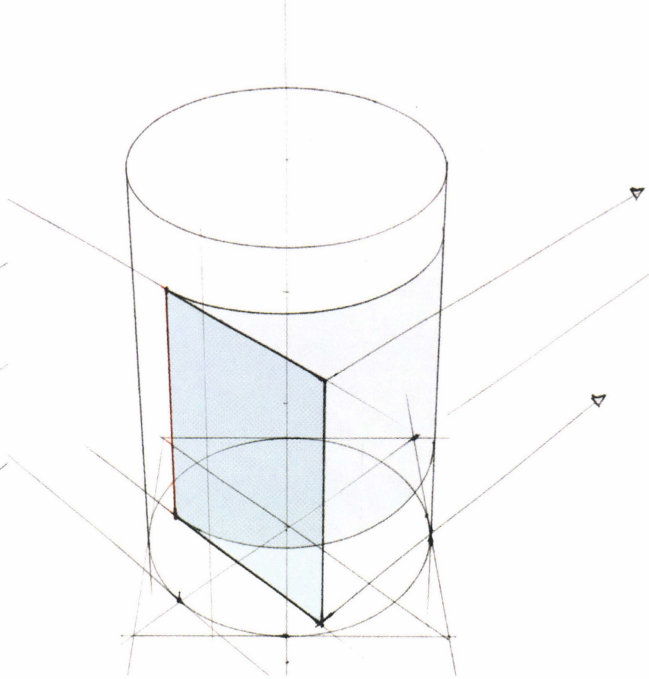

If it were projected the shaded area would result. This does not work, as it does not take into account the non-stretch nature of the label. A better way is needed.

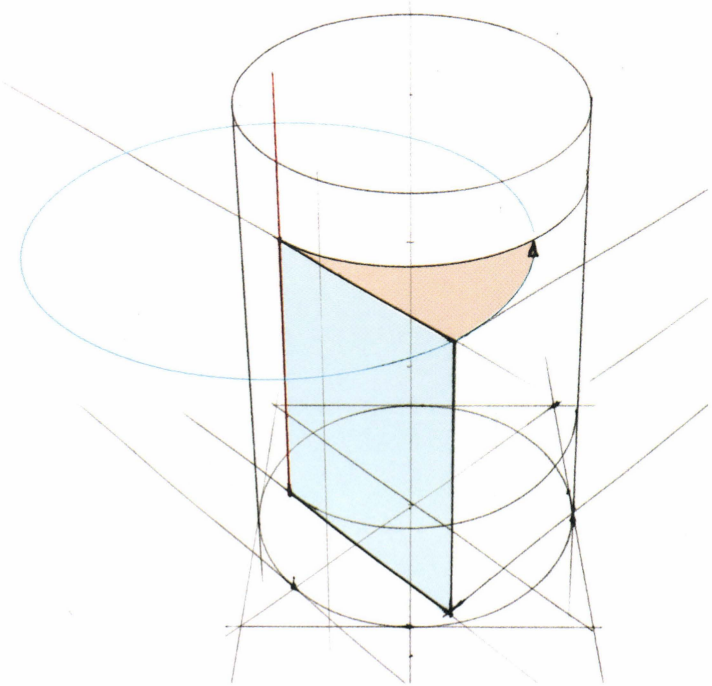

3. Try to predict the wrapping of the label by first rotating it around the contact edge of the cylinder. Use an ellipse with its minor axis placed at the left edge of the label. This foreshortens the length and gets it close to the correct area.

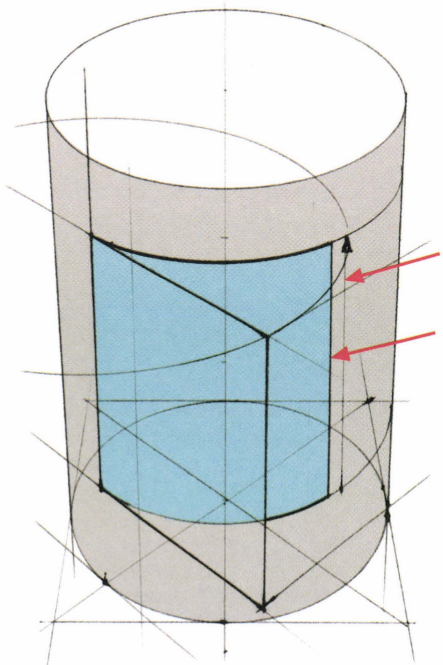

4. If the label were being stuck onto a flat surface, the ellipse foreshortening trick would work perfectly, but in this case the surface is round, so as the label wraps across the curvature of the surface it becomes even narrower and it will not be able to reach the line created by using the ellipse. Simply make a best guess and adjust the edge accordingly.

DETAILING AND SCULPTING SURFACES

Every lesson in this book builds on the knowledge of the previous lessons, so this means that each step along the way assumes that a certain level of competence of the prior lessons has been achieved before jumping into the next construction. Getting frustrated with how your drawing ability is progressing as you work through this book? There is no quick fix but to slow down and master each lesson before moving on to the next.

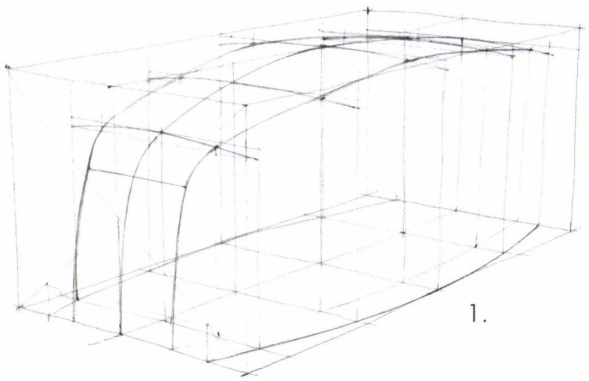

1.

1. Start with a basic 2-curve combo and a top view placed a bit wider on the ground plane.

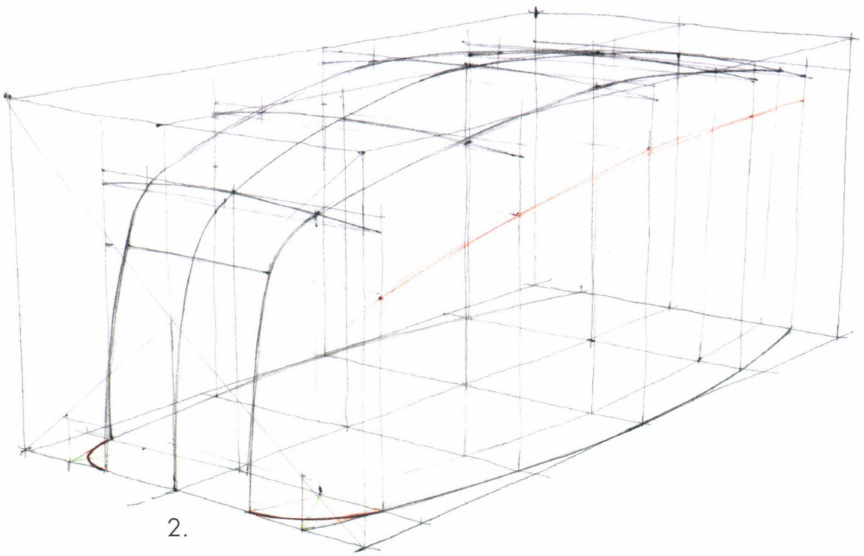

2.

2. Connect the front ground line and the outside top-view line on both sides with symmetrical sections. Draw a tangency reference line for the X sections on the side of the form.

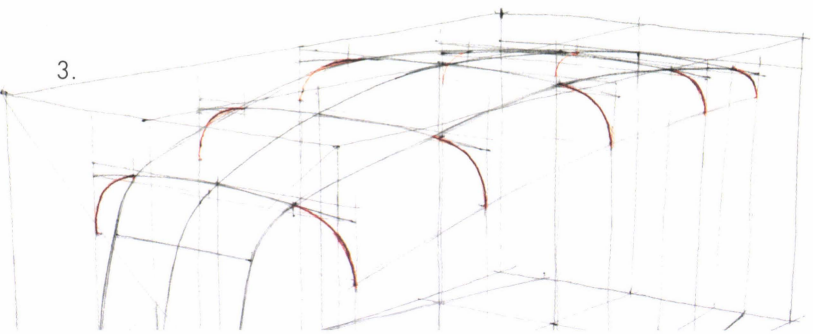

3.

3. Modify the X sections with radii using the reference line from step 2 and mirror them to the far side.

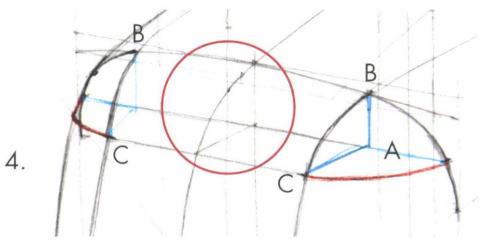

4.

4. To add a notch into the upper-front corners of the form, first draw the notch in side view at the centerline, (within the red circle). To transfer this notch to the left and right and intersect it with the surface of the form start at the C points and project the bottom of the notch, resulting in the red section lines. To draw the blue lines that define the inside corners of the notches, project a line, A, straight across to the LVP from one side to the other. Then, drop a vertical line down from B on both sides to intersect this line and connect those intersection points forward to points C.

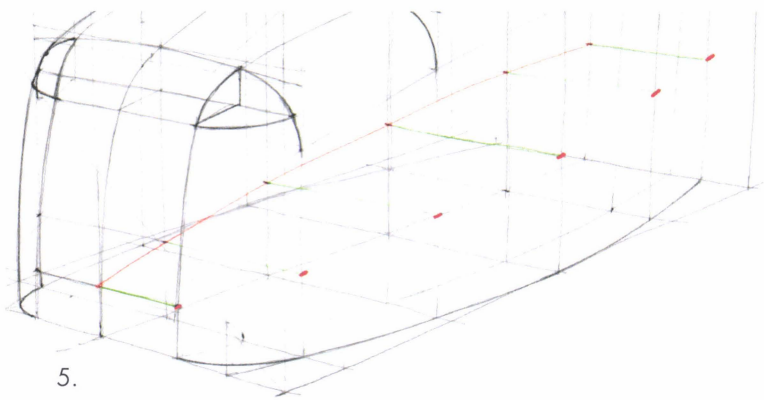

5.

5. Project a curved line onto the side of the form by drawing it first on the centerline plane (red line) and then projecting it out to the vertical X-section lines. This creates reference points to be used to draw the resulting curve.

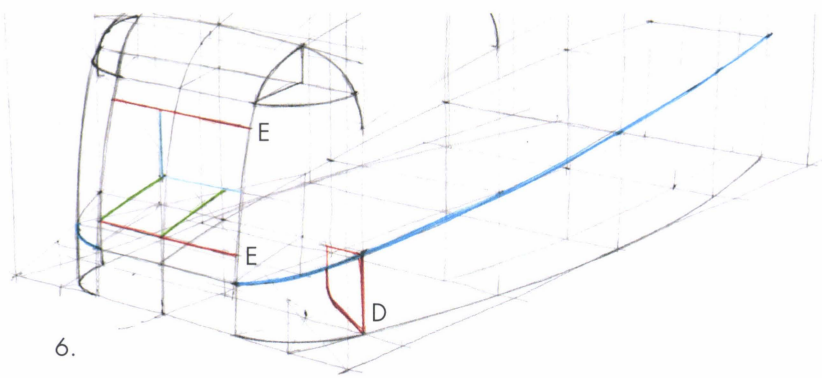

6.

6. Draw the resulting curve (blue line) through the reference points. More surface variation can be made by punching holes into the surface by either defining a new X section, like at D, or by defining the top and bottom of an opening, (red lines E), and then adjusting the centerline section (green line) to move the front surface back into the volume.

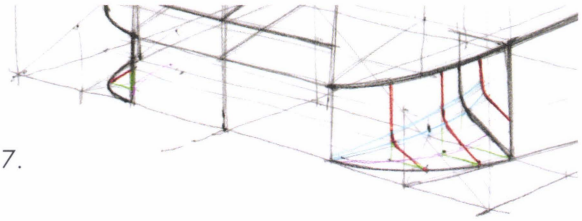

7.

7. To define the surface of the indented detail, draw the top view of the new curving vertical surface on the ground plane and then slice new X-section lines to the LVP wherever you want to place them. Draw the angled fillet (light blue lines) that leads from the front corner of the form back to the X section that was drawn first. Then draw new (red) section lines, and mirror one to the far side to see if it is visible.

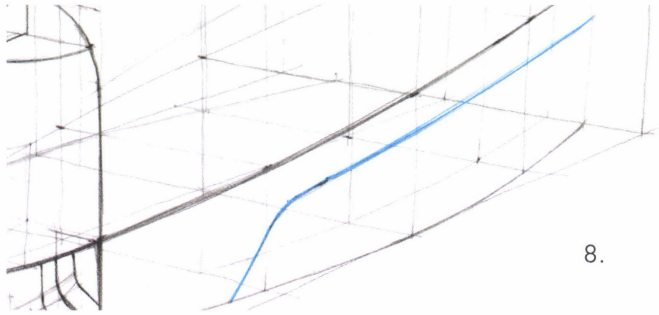

8.

8. Working in reverse can also be done by sketching a line anywhere on the surface and then determining the X sections, if there are any, or just leaving this line as a design line on the surface.

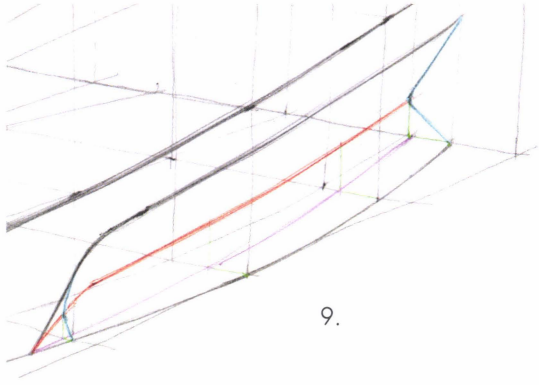

9.

9. This design line on the surface can be the start of a transitional form change; all that is needed are a few X sections to communicate the form. In this example, the red line is sketched first and then its top view is found by drawing the two blue sections near the front and at the back. Then the purple line is projected down to the ground plane. In step 10, three more (red) sections have been added using this line.

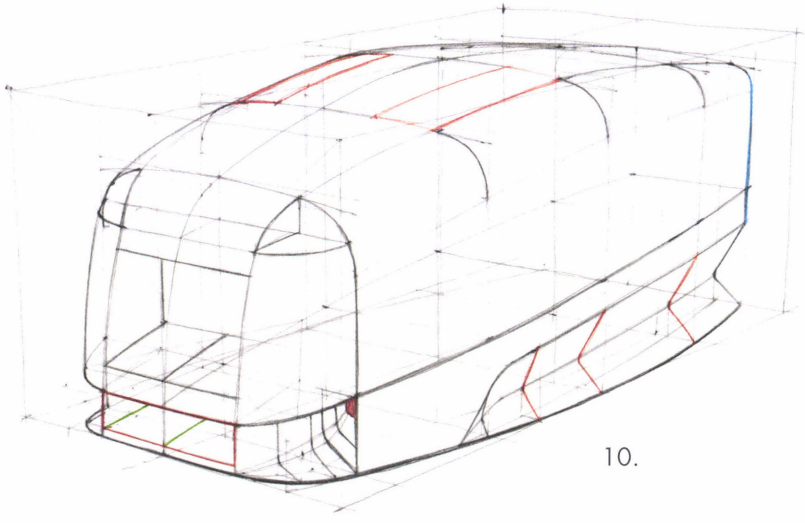

10.

10. Add a new hole at the lower front (red outline). The green lines, added next, indicate the bottom of the new surface moving into the form. Also two areas, where forms will be added, are defined on top (orange).

11. Create the two added forms on top of the bigger surface by first drawing a centerline along with two X sections for each. Use the perspective guidelines to the LVP to help draw them symmetrically.

12. After the sections are drawn, add the silhouette of each. The orange lines define the blending fillet of these forms into the main surface.

13. The red lines seen here can be sketched anywhere on the surface. They are just design lines until X sections are added to convey if they represent a form change.

14. The red section lines communicate that the lines in step 13 indicated an undercut step in the surface of the side. Also note that a double line is used to show a small radius on the left side of the opening at the front, F to G. The blue lines on top are design lines that diagonally connect the shorter red lines. They extend back to the centerline to ensure symmetry.

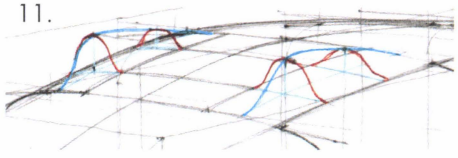

11.

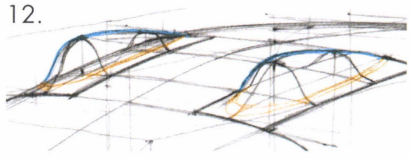

12.

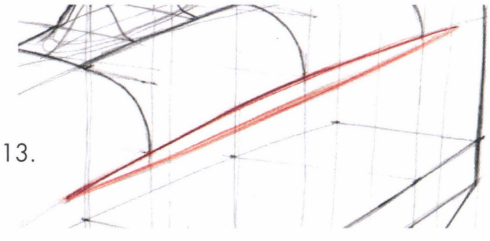

13.

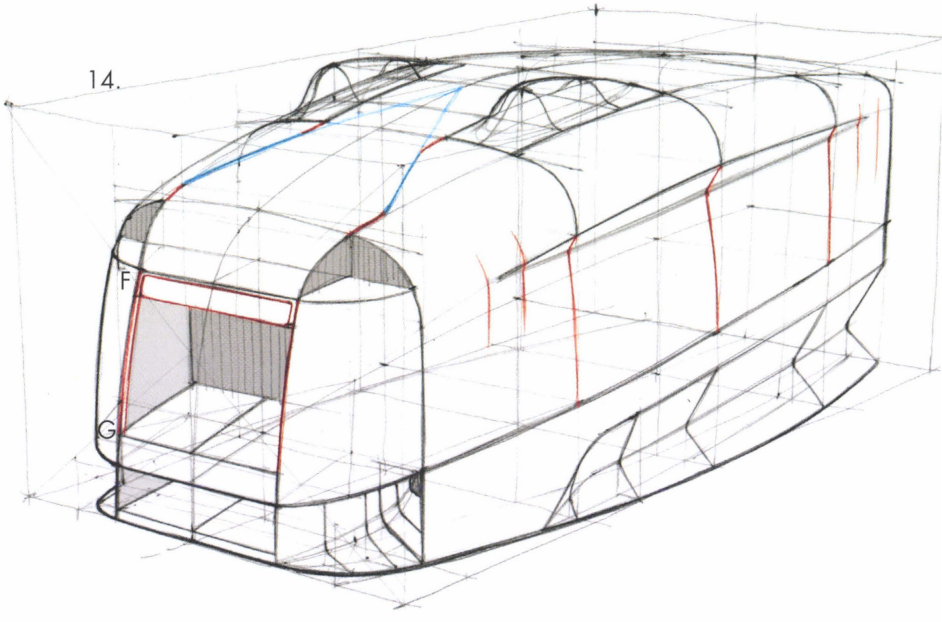

14.

MORE TIPS FOR MODIFYING COMPLEX VOLUMES

There are usually several ways to construct the same form in perspective. Over time you will develop favorite techniques and discover that certain objects are easier to draw in a certain sequence of volume-building steps, but there is no absolute single way it must be done. Just practice and study the volumes you are trying to draw and draw them using the different approaches that have been shared. The next four pages will explain a few more tips on drawing complex forms.

1.

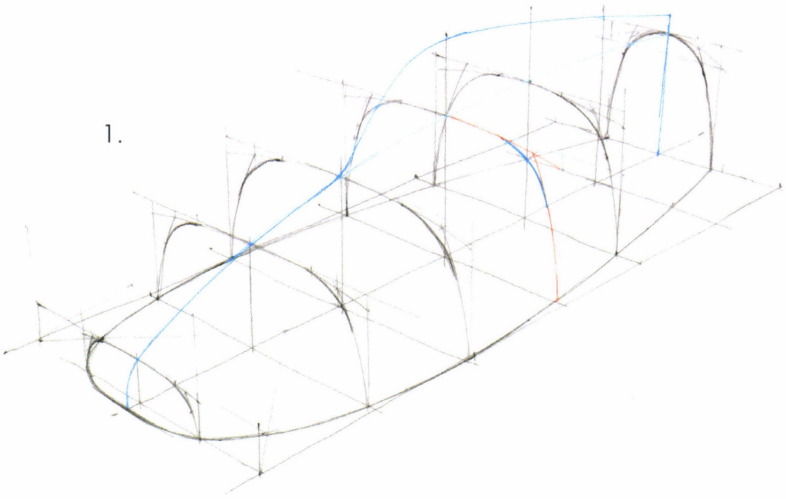

2.

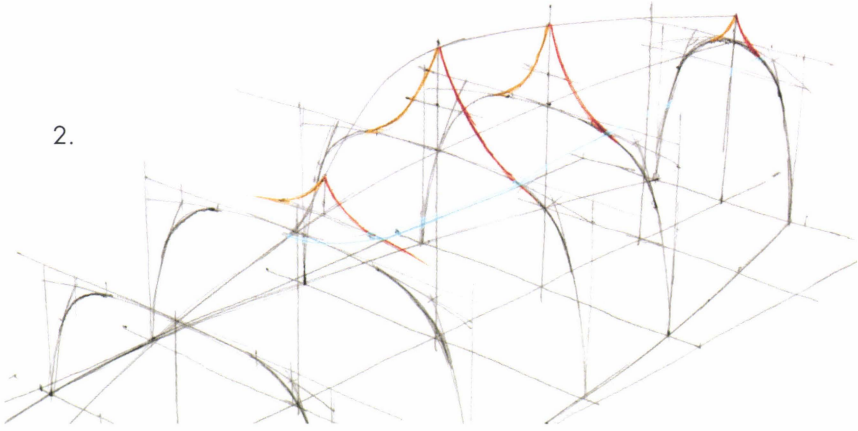

1. This volume is fairly well worked out and all that remains to be done is to modify the X sections of the lower part of the form so they stretch up to the centerline at the back half of the form. Note how the X sections were drawn with more precision by placing two curves first (orange lines), and then blending them with a shorter curve (blue line). Sometimes it can be difficult to control the exact fullness or precise curve of a section line, so by breaking it into a few lines and then blending them together, more accuracy can be achieved.

2. The four sections at the back of the volume have been modified to reach up to the centerline (orange). Note that the original X-section lines are drawn all the way through the form and the added orange section lines sit on top of these sections that define the lower half of the volume. The light blue line indicates the tangency of these new "inverted V" sections. Use longer construction and reference guidelines like this to locate starting and stopping points for the smaller sections.

3.

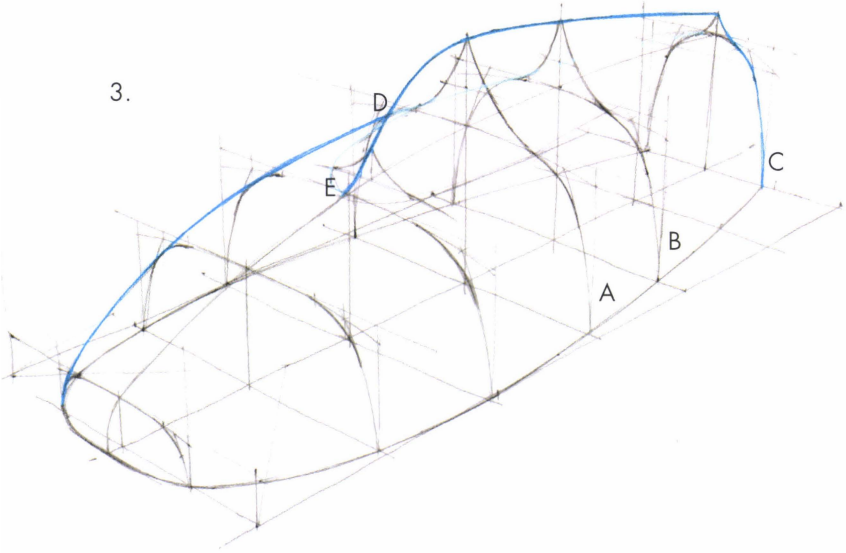

4.

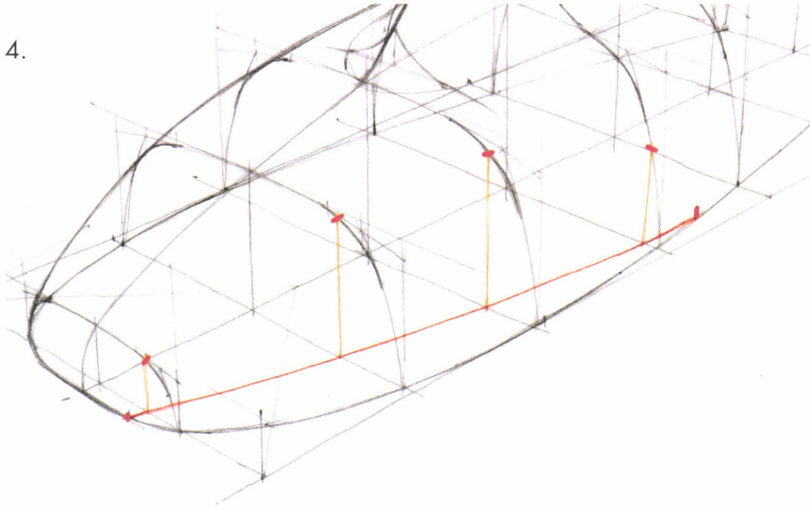

3. To draw the silhouette of this volume, have the X sections (A, B and C) drawn all the way through the form to the other side. Start by drawing the silhouette tangent to the sections at the left of the form, and around it to the right. When the silhouette runs into the centerline form at point D, do not blend it into the centerline but instead keep it going behind the centerline, tangent to sections A, B and C. For the silhouette coming down from the top of the form along the centerline, let it cross the first part of the silhouette and then fade by the time it reaches E. There we can see all of that section line, which means the silhouette has faded. This is a classic overlap of two forms on the same volume. The section lines indicate where to stop the silhouette as is comes down the centerline.

4. Cut the form with a line on the Z plane (red). As before, project this line up at every X section to find the reference points for the curve created by this slice.

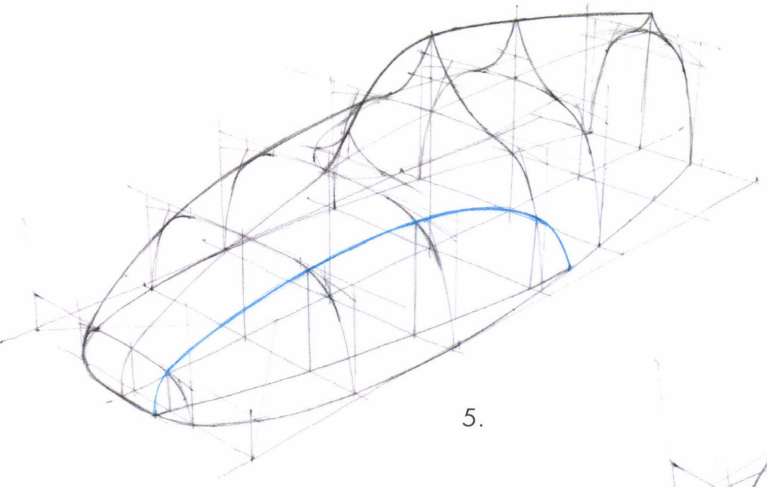

5.

5. After the reference points are located on the surface of the form, a line can be sketched (blue line)that defines the new vertical surface of the volume, (shaded blue area).

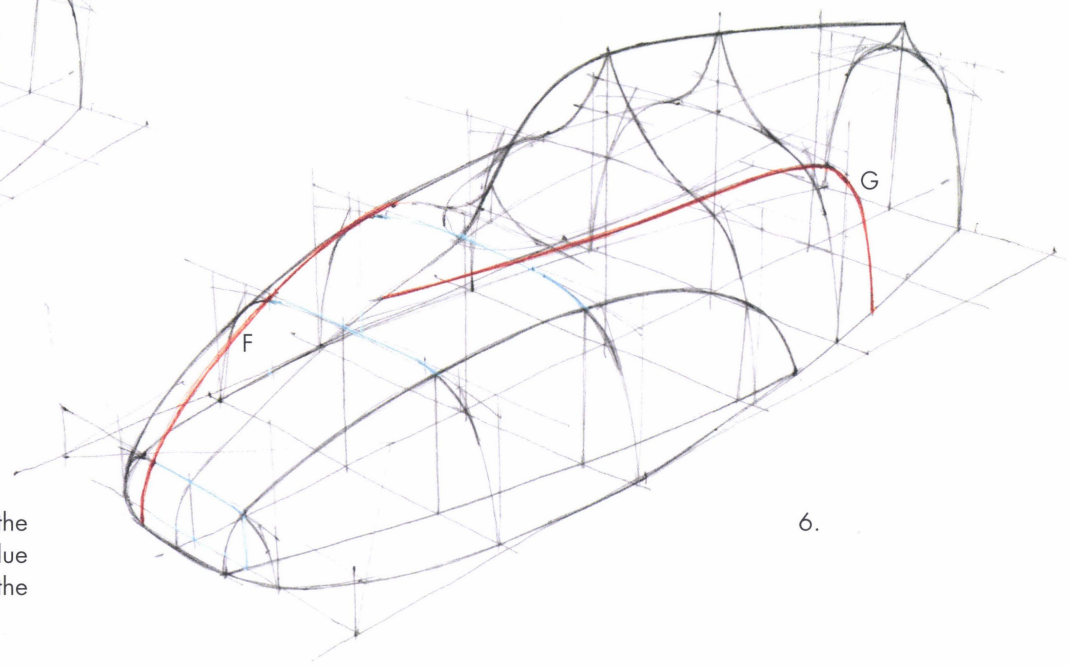

6.

6. Mirror this line from the nearside to the far side of the volume (red line F). To get a line on the surface without having to project it from one of the flat planes first, just sketch a line anywhere on the surface (red line G). Remember that when free-sketching a line in perspective, the ortho view of that line might not turn out as expected. It's very easy to be misled as to what a line like this might look like in the other views, meaning it's hard to guess right.

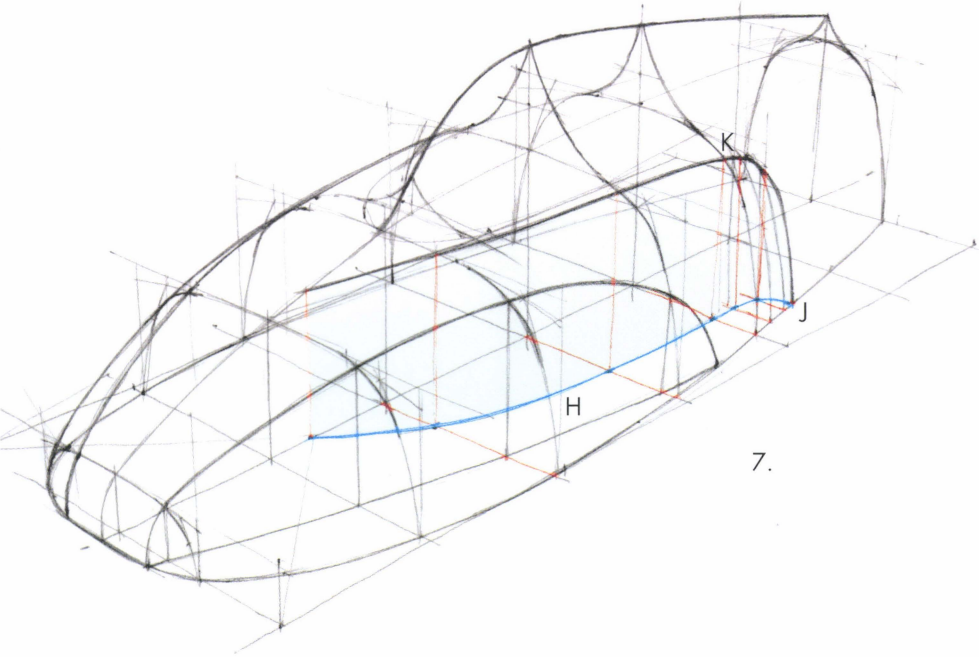

7.

7. Find the top view of the line that was free-sketched onto the surface by projecting it down to the ground plane where it crosses each X section and connecting these points to create blue line H. Note how the tail end of the line at point J has to make a fairly severe bend to get from where it crosses section K to where it terminates at the Z plane. A more precise calculation of this curve can be achieved by adding a few more X sections where more help is needed.

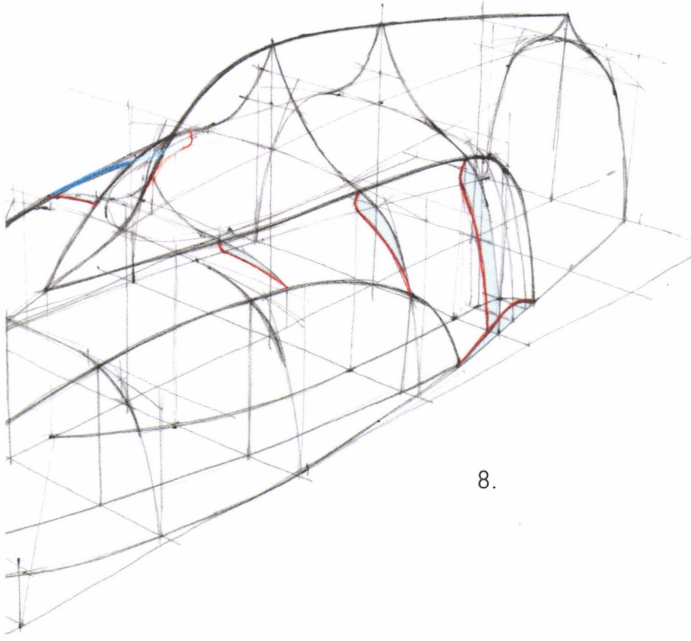

8.

8. This strong curve in the top view doesn't mean anything is wrong with the line itself, just that if this is not what the line was supposed to look like in top view, adjustments need to be made. To add a little more complexity, the sections have been modified (red lines) also removing the blue shaded volumes at each section. This results in a slightly different silhouette line on the far side (blue line).

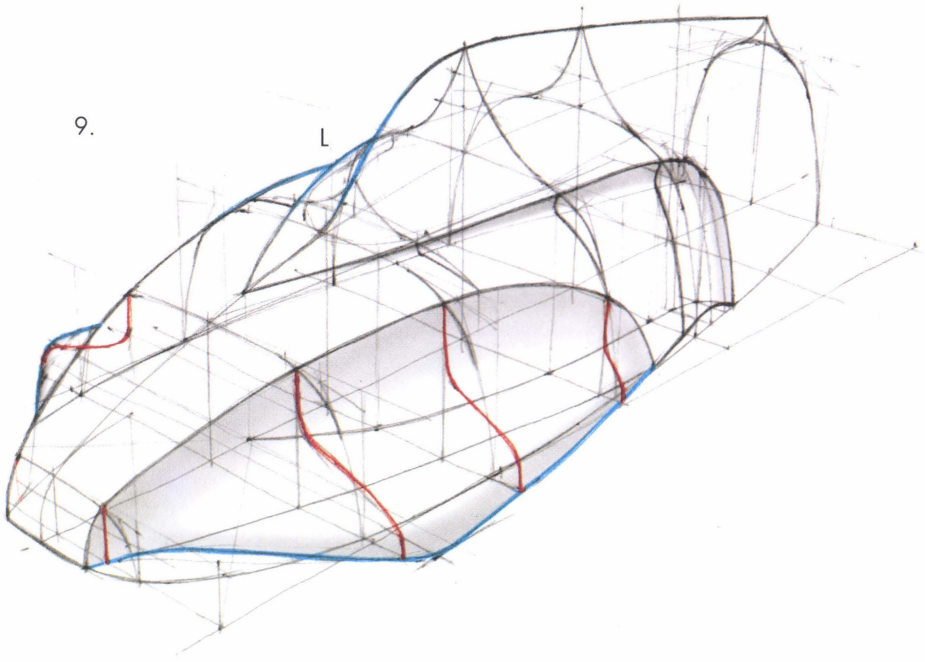

9. Note the adjusted silhouette lines at L. Before, the only worry was about overlapping two forms, but now three have to overlap. Do this by making the lines thickest around the true silhouette, and then make them lighter and thinner where they only overlap each other. Also observe that the Z-plane top view has been adjusted and new X sections have been sketched (red), extending left and right of the form.

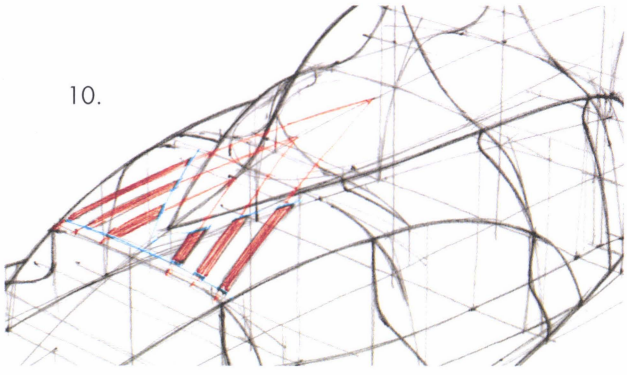

10. Add a few details to the surface by free-sketching a few diagonal lines on the nearside and then mirroring them over to the far side, or vice versa. Do this by extending the centerline of each diagonal until it intersects the centerline of the original form. Note how these extended lines ignore the flared-up surface defined by the inverted-V sections.

Intersecting volumes using a temporary construction plane

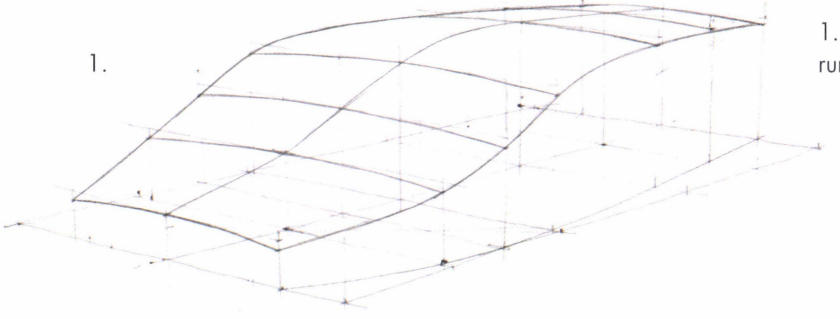

1. Start with a simple 2-curve combo with slightly convex X sections running across it.

2. The goal is to project a teardrop shape onto this surface, located on its centerline. To do this, draw the shape to project where it can be seen clearly, which makes it easier to draw. In the case of this example, drawing the projecting shape on the ground plane is a little tough as it is pretty foreshortened. The solution is to extend the perspective grid further down, creating a temporary construction Z plane. This makes drawing the shape easier as this new plane is less foreshortened.

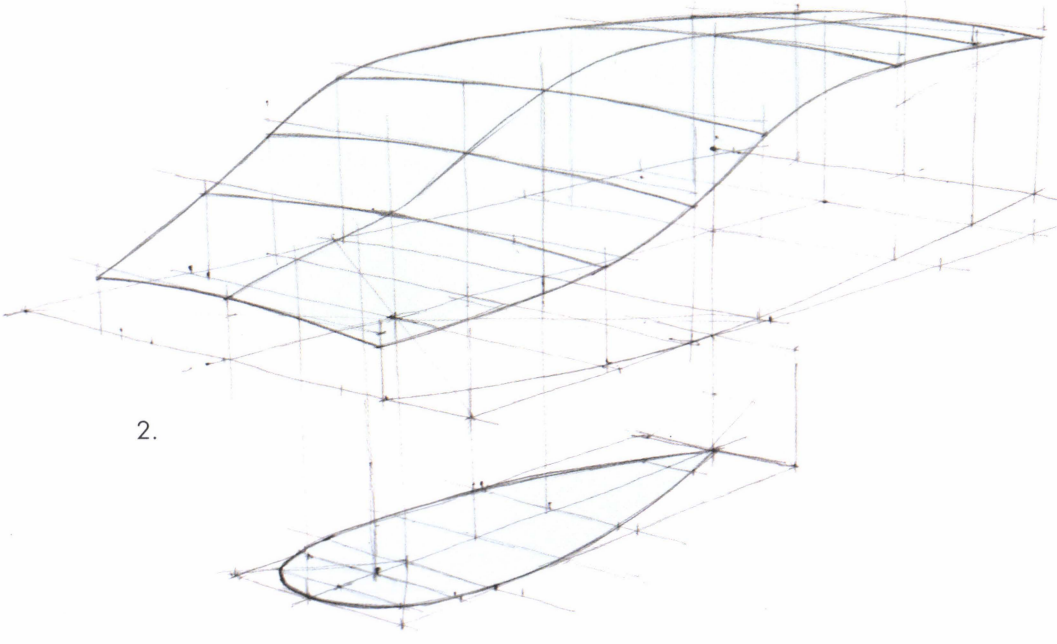

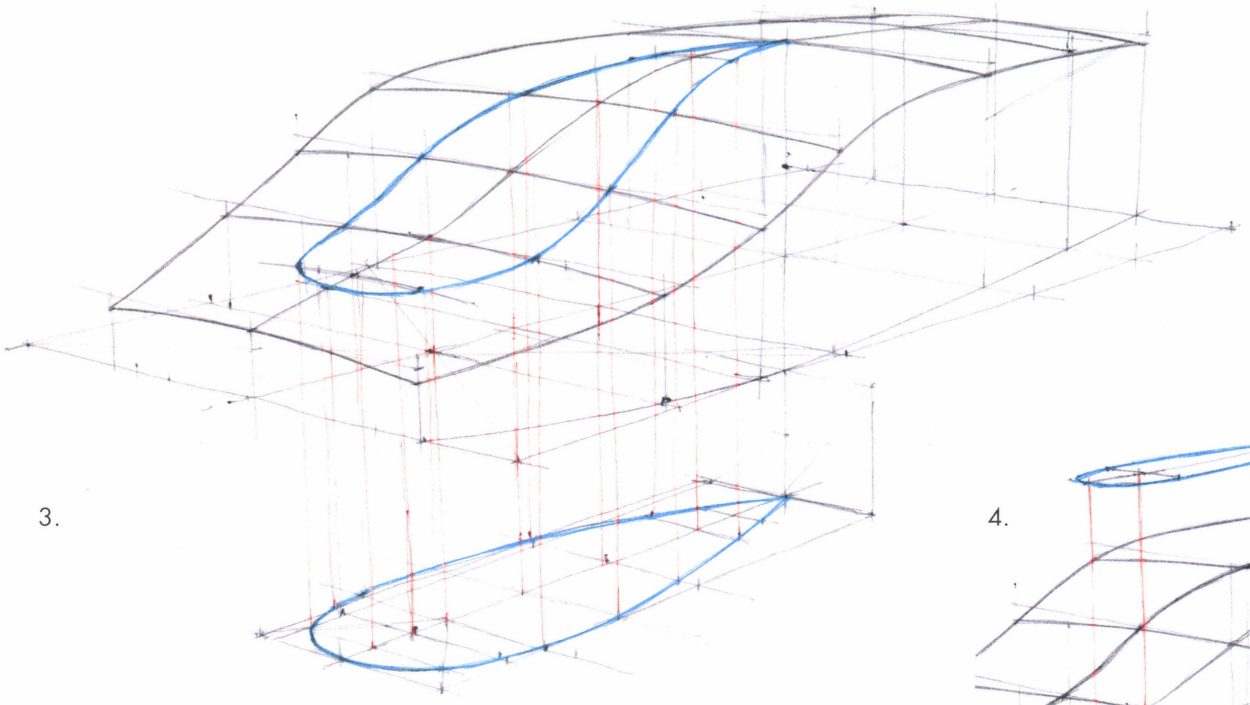

3.

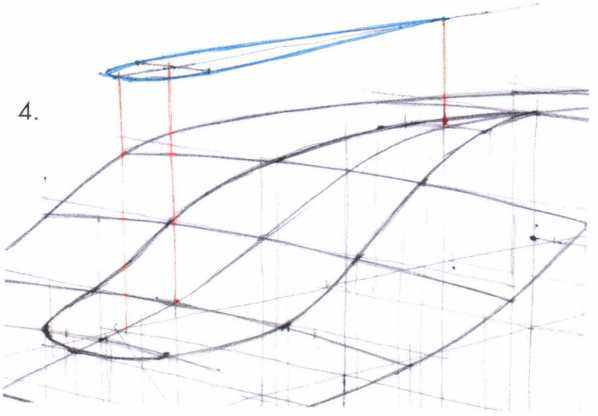

4.

3. After drawing the teardrop on the temporary construction Z plane, project it up into the main surface. Use the X sections to locate reference points to sketch the projected teardrop onto the surface.

4. Let's float a smaller, similar shape directly above the centerline of the main surface and project it downward. Begin by projecting the centerline.

5. Transfer the width of the X sections and sketch the resulting projection on the surface.

6. The first teardrop could be just a graphic on the surface, but now let's make this smaller one solid and blend it into the main surface with a fillet. Sketch a tangency line for the fillet on the main surface and add the fillet sections (red lines) to the form. Use line weight to darken the silhouette of this smaller form as it overlaps part of the larger surface. Let the silhouette line fade as this smaller form blends into the larger.

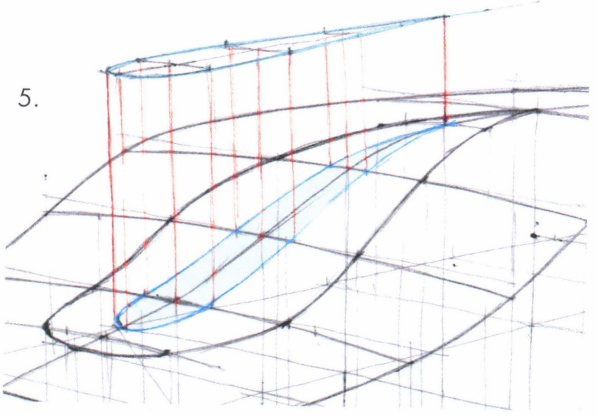

5.

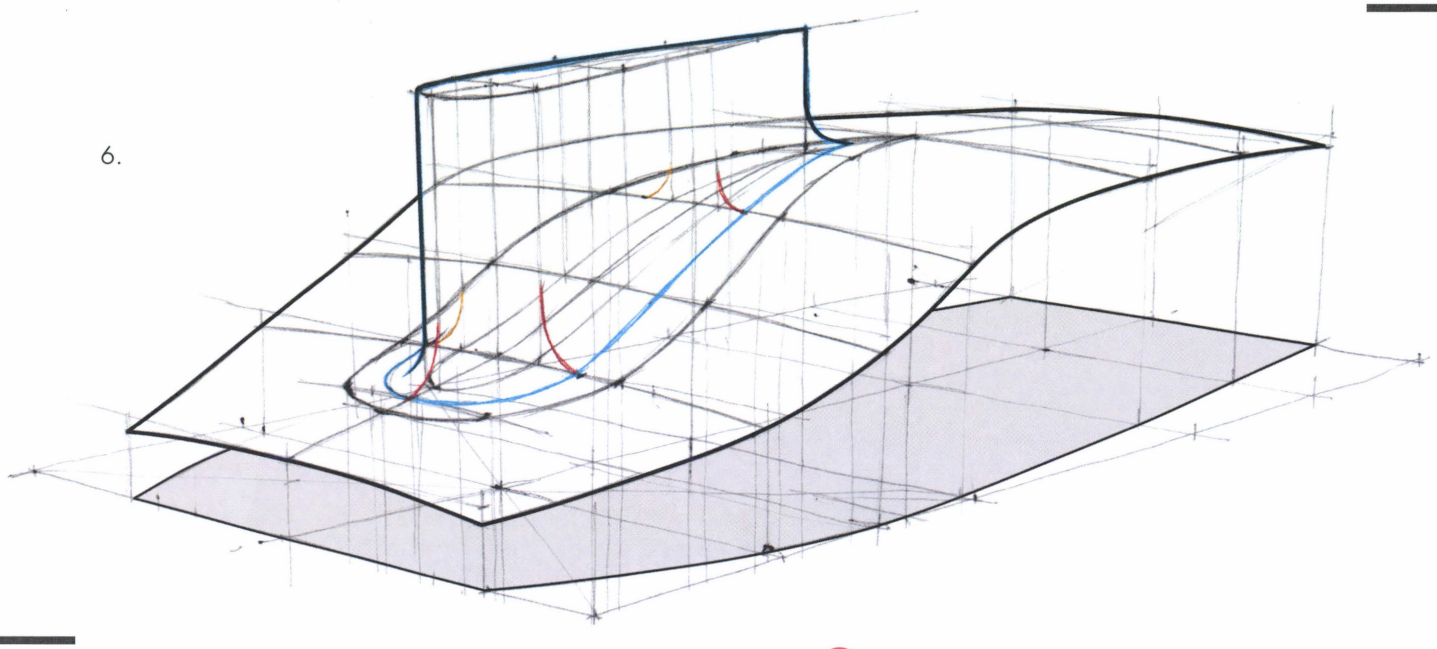

6.

CONTOUR LINES, OVERLAPPING AND LINE WEIGHT

After applying all of the section-drawing techniques, the object will often look like the car below. It's a great drawing for model builders who love the reference lines but it's very confusing for everyone else. This is when a good overlay that emphasizes the overlaps of the forms, with some variable line weight, will make the overall object much easier to understand.

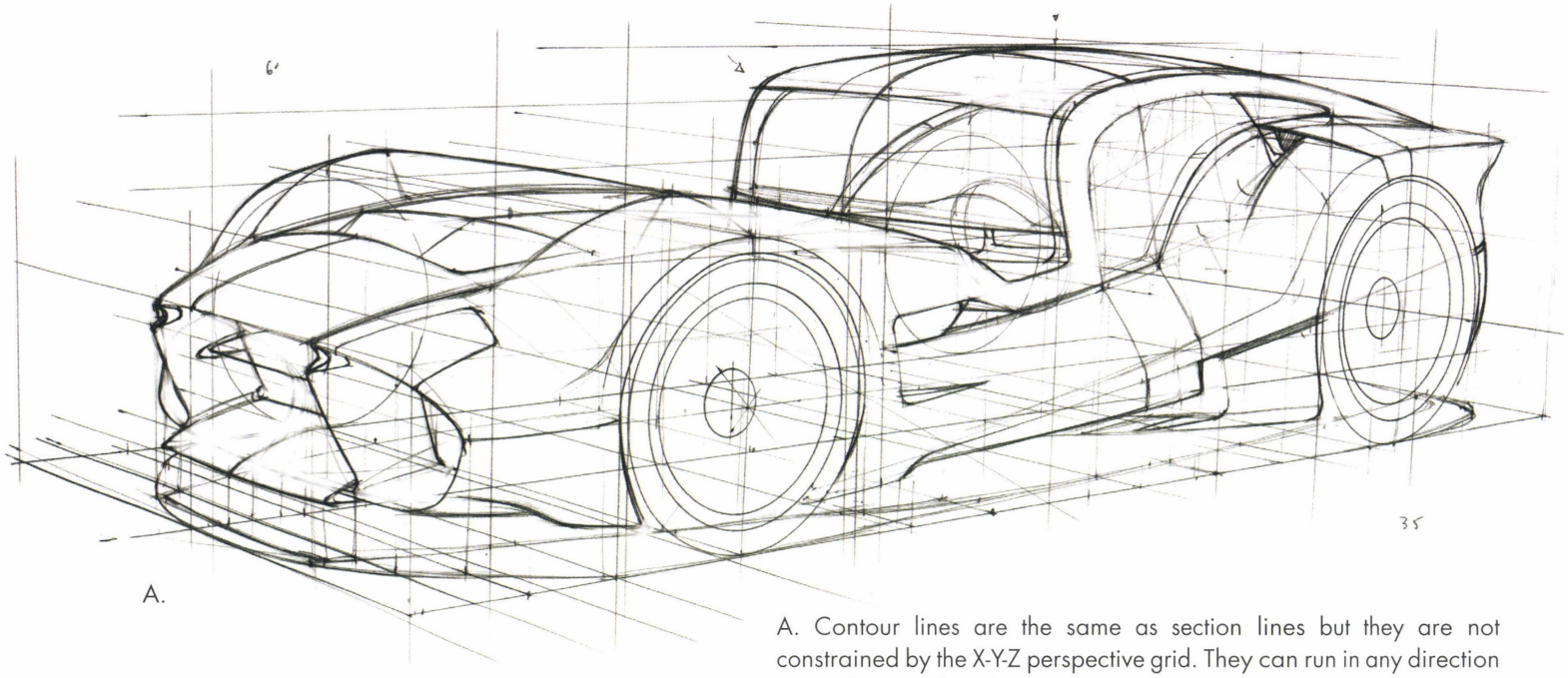

A.

A. Contour lines are the same as section lines but they are not constrained by the X-Y-Z perspective grid. They can run in any direction that helps to define the surface.

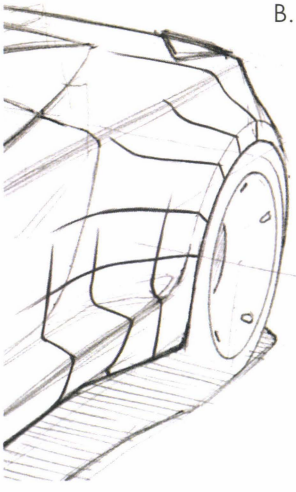

B.

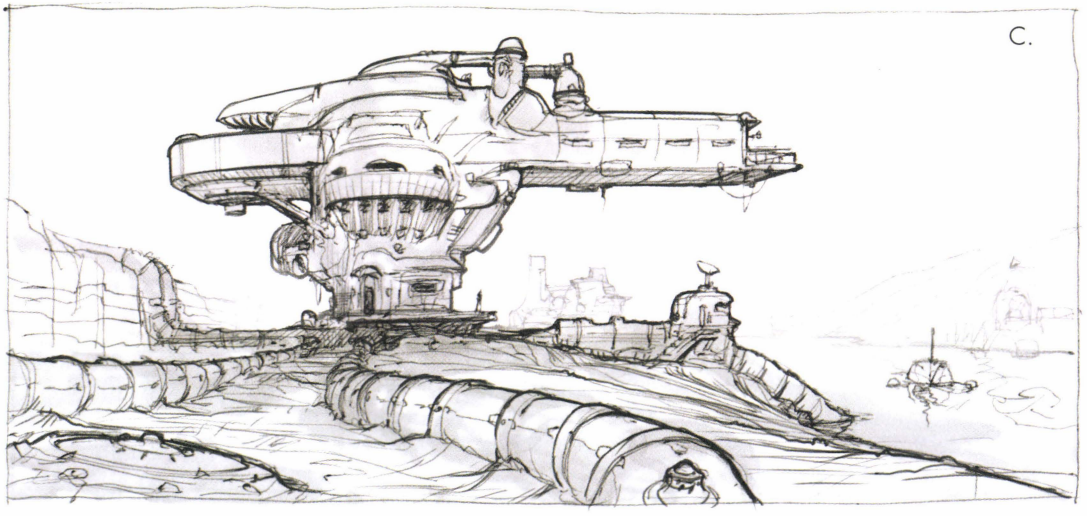

C.

B. The contour lines that run across the rear-quarter panel of this car are a mix of two concepts. First, the three contour lines on the lower rocker, are radiating almost 90° to the fillet, blending the rocker step to the side body. The second set of contours are radiating from the center of the rear wheel. Usually these lines are drawn extremely lightly on the surface of the form, but they are over-emphasized here to make the concept clear.

C. Line weight can really bring a sketch to life after the main perspective work is done. People like to look at nice drawings and our eyes are drawn first to the point of highest contrast, so use this to your advantage. Make the sketch more attractive by increasing the contrast and line weight in the areas where viewers should look first. This will become the natural focal point so be sure that the outlining and increased values align with the visual message of the sketch. In this example, the most important elements were the overall silhouettes of the building in the mid-ground and the big foreground pipes that lead to the building, so these shapes got the heaviest line weight, while the background got the lightest.

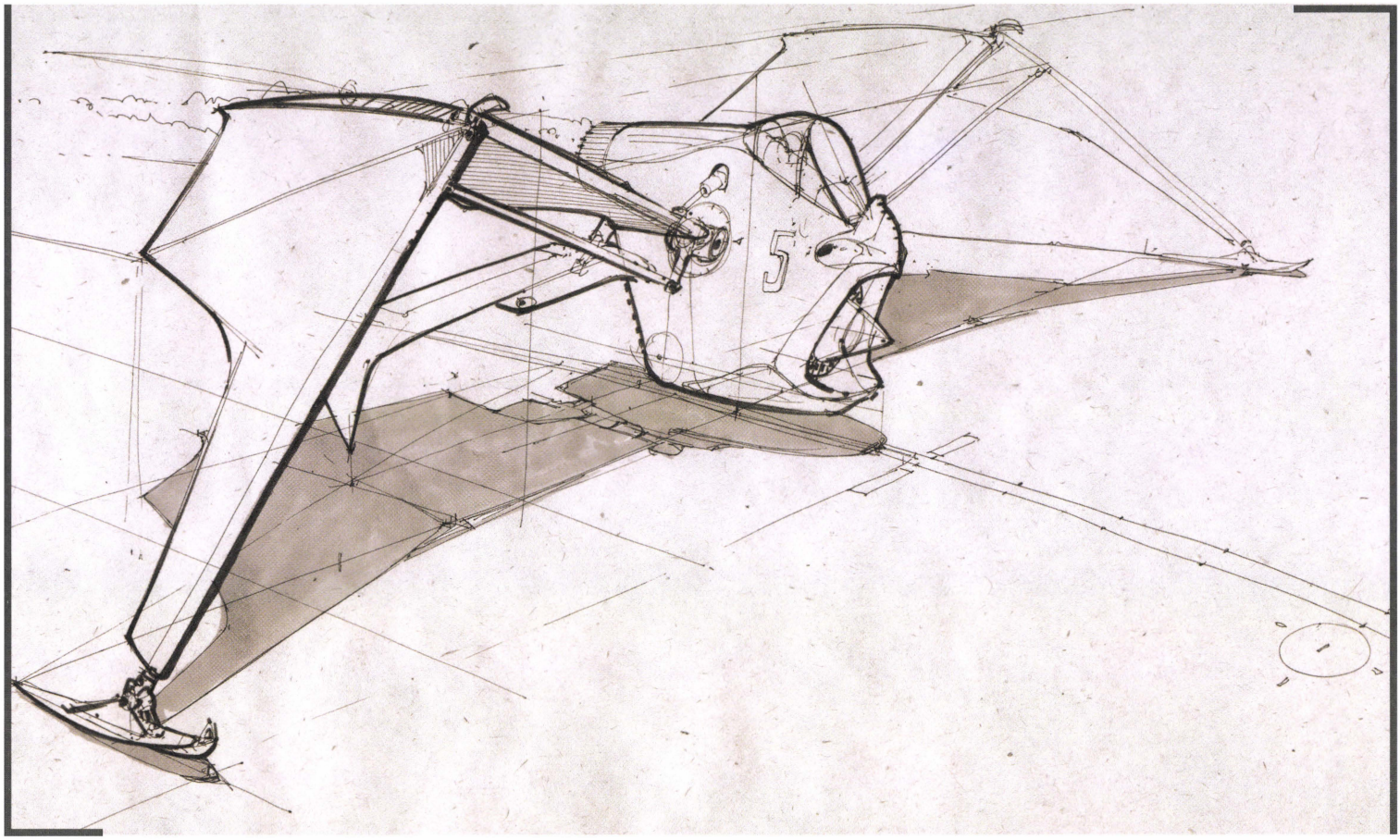

D.

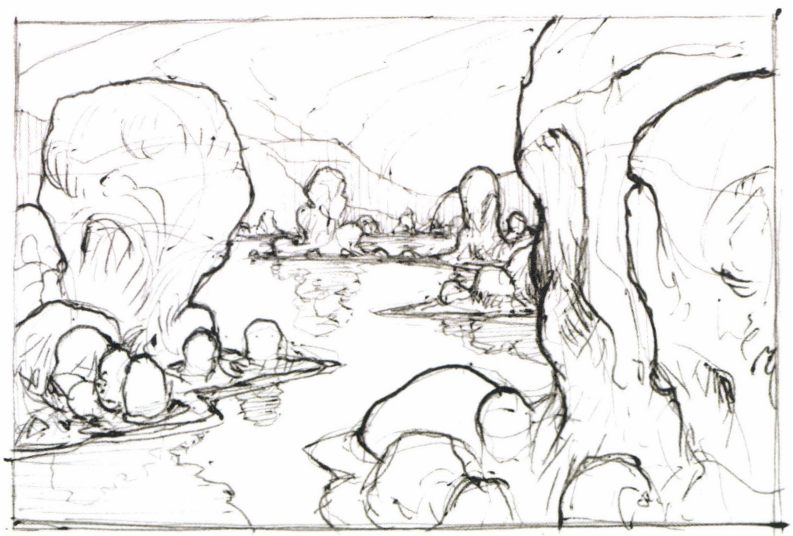

E.

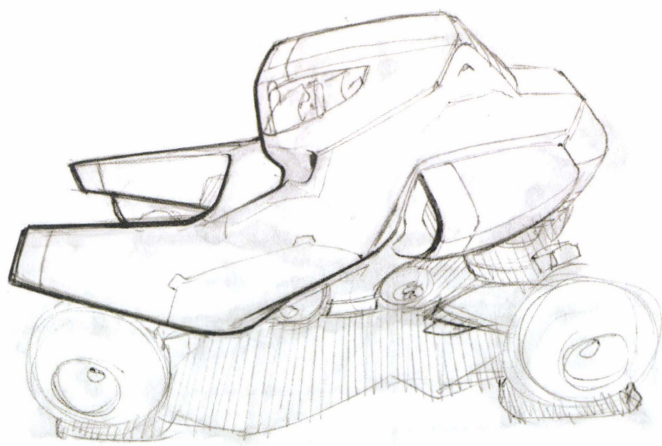

F.

D. Here, line weight and overlapping forms within one object are pushed to an extreme. Where one line overlaps another, the weight of the overlapping foreground line is thicker to visually set it in front of the other. Since the far-side wing is a mirror image of the foreground wing, it is left somewhat static and drawn without a lot of variable line weight. This dramatic variation in line weight within a drawing is referred to as a "vignette," meaning to describe briefly or fade into the background. The vignette concept has been applied to the far-side wing.

E. This sketch uses two things to communicate: perspective, which is simply that objects of equal size that are farther away from us appear smaller, and occlusion, which is when objects appear to overlap each other, the overlapped object is farther away. To strengthen these visual cues, use increased line weight to make the overlapping forms more obvious. Keep this technique going into the distance while also lowering the overall value and scale of the lines to give the sketch a stronger impression of perspective.

F. Another example of varying line weight and occlusion. Note how the increased line weight helps the forms to overlap each other.

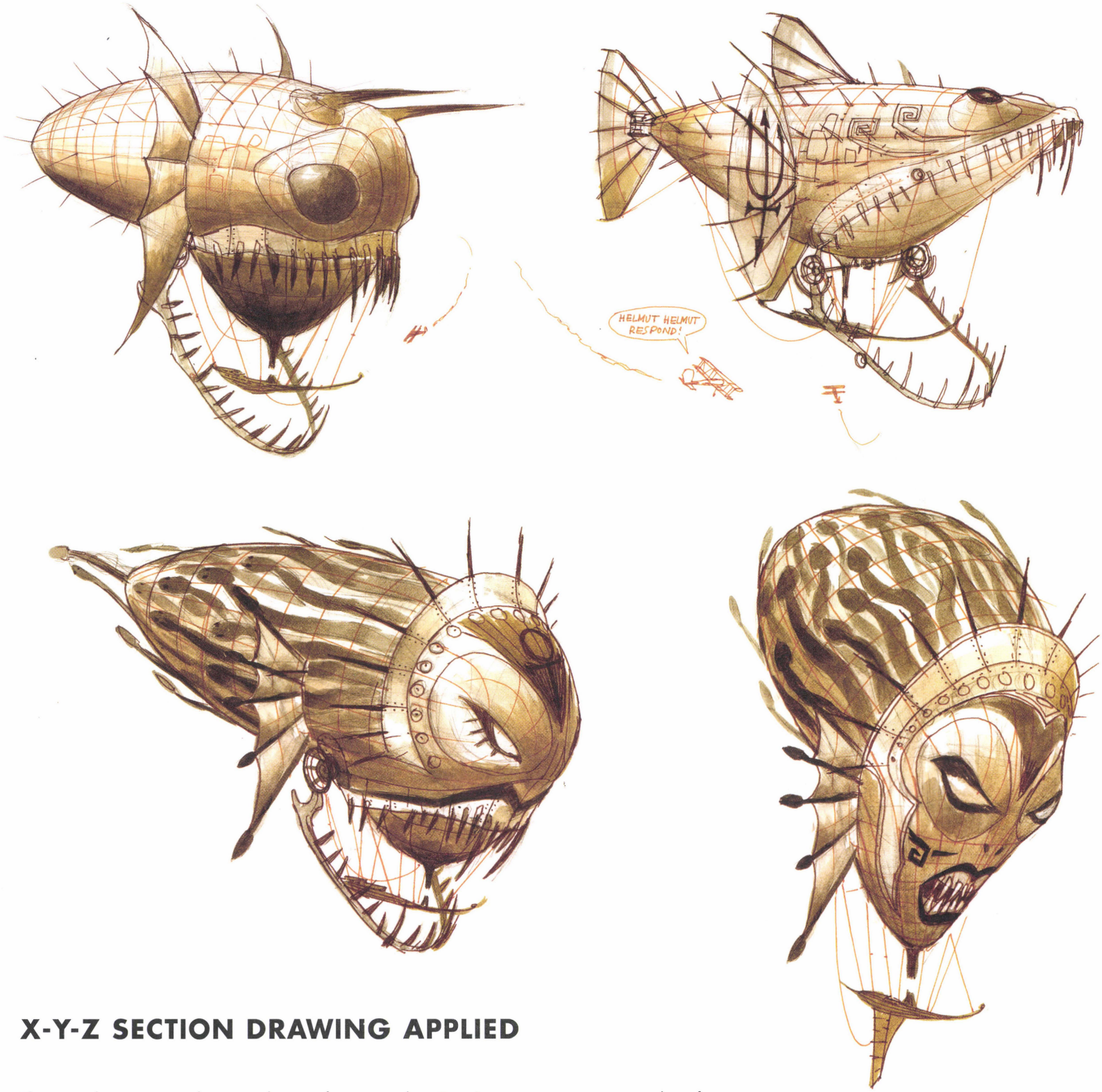

X-Y-Z SECTION DRAWING APPLIED

These airship concept drawings by our former student Roy Santua are great examples of applying X-Y-Z section lines to help draw complex objects in perspective. The section lines and construction techniques he used are clearly visible. By applying his strong foundation skills and drawing through the forms, he was able to accurately foreshorten the patterns of the graphics and the fabric seams as well as the details like the spikes wrapping to the other side of the objects. The basic volumes are all about drawing sections first and most of the details within the graphics are a series of 2-curve combos.

To see more of Roy's great work head over to: http://rsantua.blogspot.com

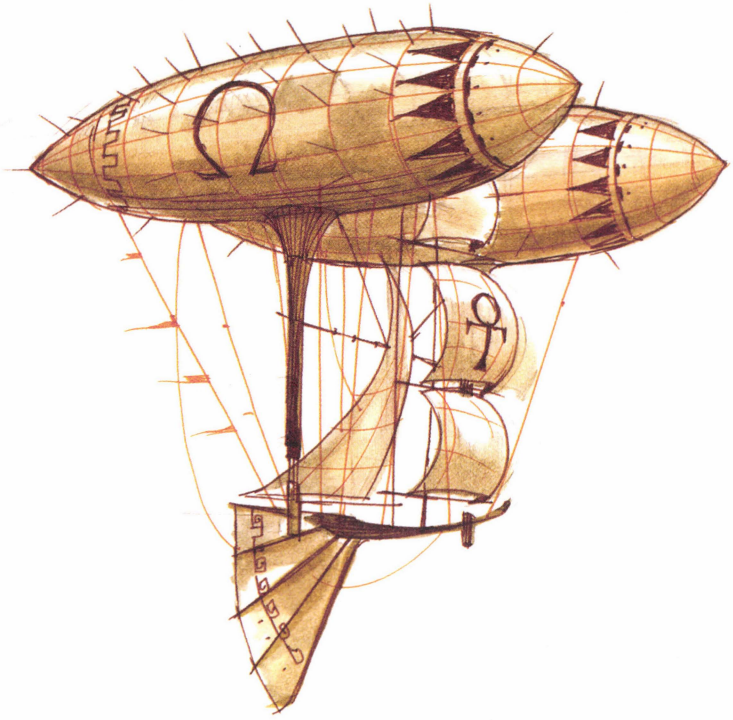

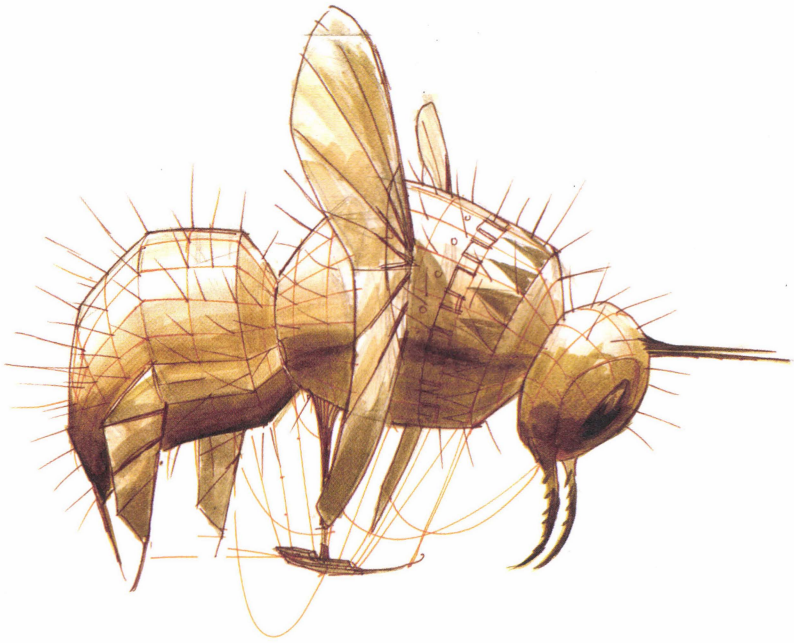

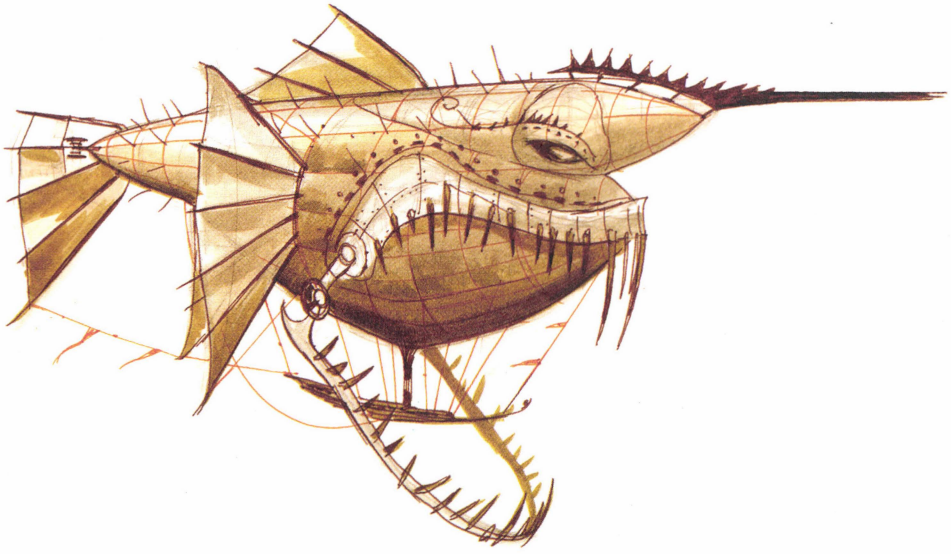

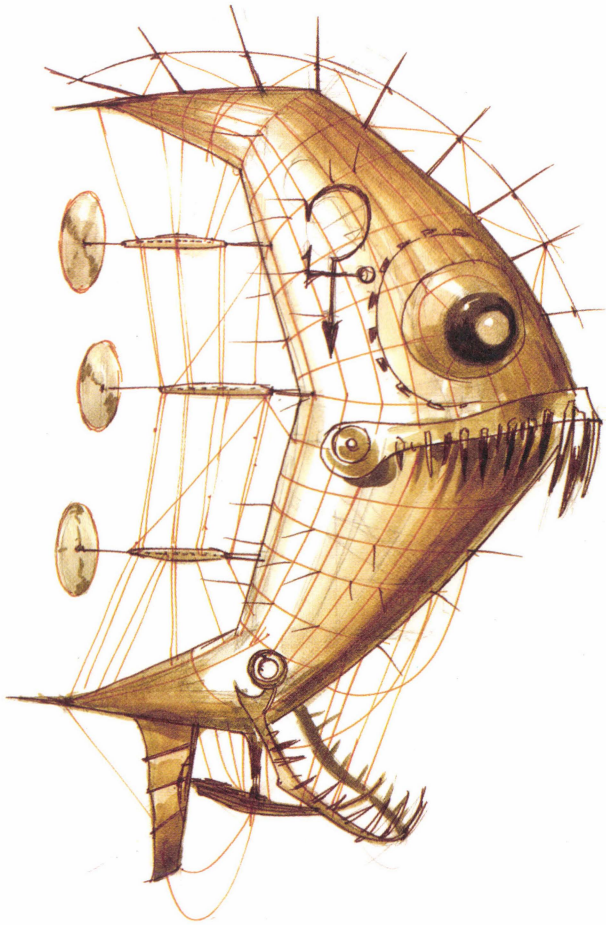

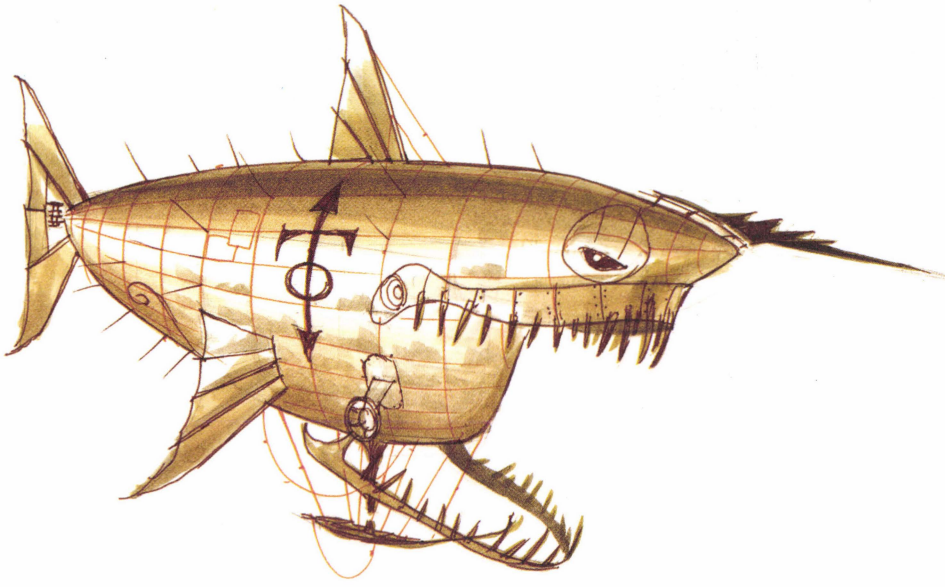

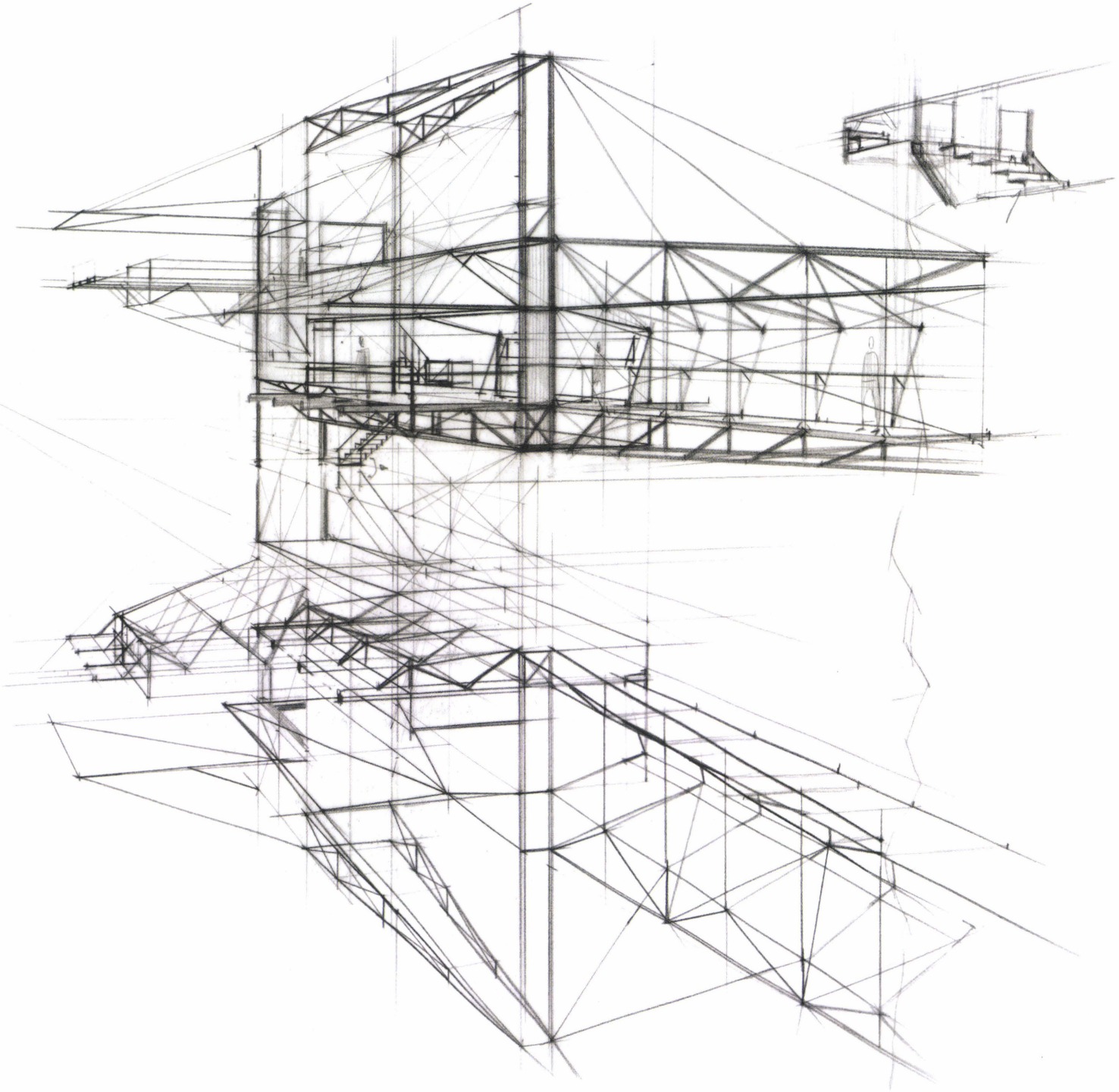

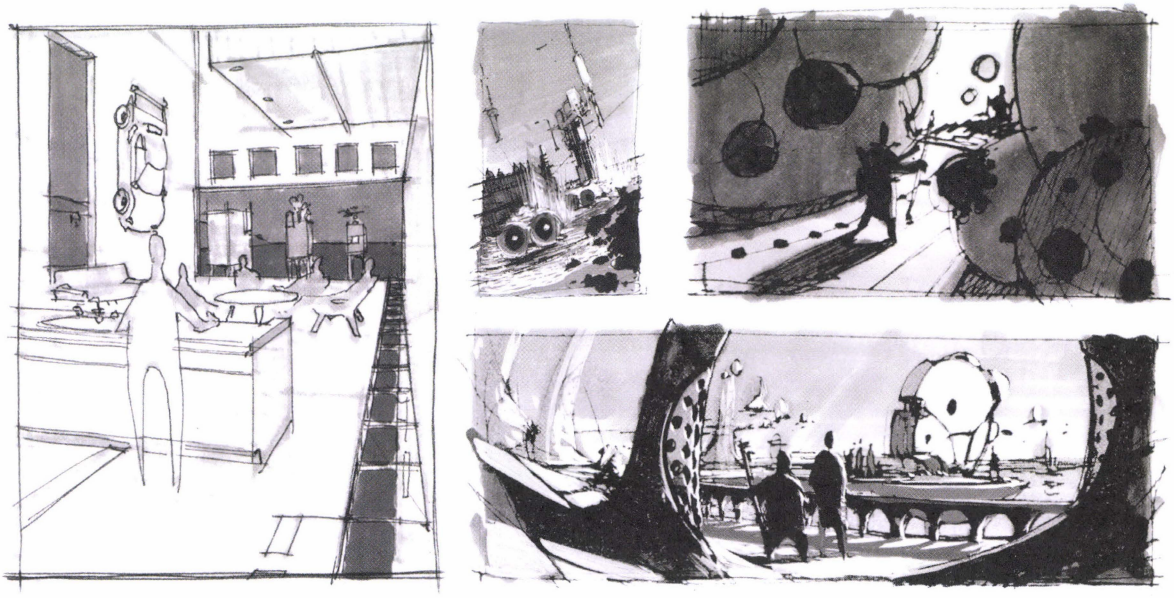

CHAPTER 07

DRAWING ENVIRONMENTS

The ability to draw any environment, interior or exterior, for any purpose is a great skill to develop. When sketching anything from your imagination, it is always best to start with an idea. This idea can come from a story that you have read or written, or a project that needs to be visualized before trying to build or render it—for example, remodeling a home.

Once a drawing has been started with a basic but essential perspective grid and an idea about composition, the next challenge will be design. Having a rich visual library of forms and aesthetic themes to pull from makes this much easier. As an example, the Entertainment Design students at Art Center College of Design spend fourteen weeks building visual libraries solely on the subject of architectural exteriors. Every other week, two new architectural genres (e.g., Greek, Gothic) are introduced and explained by the instructor via a slide show. Then two weeks are given to draw imaginary examples of these genres with a bit of fantasy woven in, but not so much that the requested aesthetic genre disappears. This two-week assignment format is repeated the entire term, with the single goal of improving the richness of the students' visual libraries. How specifically is this done? First, existing examples of the required genre are drawn. This exercise helps the students learn what elements need to be included in the designs if the structures are to fit into a certain time period or look like they were influenced by it. After this, the students draw hybrids of multiple genres mixed together or mixed with original ideas. The main point here is that when students start to draw interesting, imaginary environments in perspective, their imaginations have already been primed to help accomplish this goal. There simply is no shortcut; research hours and the thought required must be put in to enrich a visual library. This will make initial environment sketches more interesting with every decision made for every line drawn.

For the human brain to visually interpret the environment, several visual cues are used in combination. Those that translate most easily to drawing are linear perspective (the relative size-difference of objects in the foreground versus the background), occlusion (objects overlapping each other), and atmospheric perspective (value contrast being lower the further away an object is from the viewer due to more atmosphere being between the viewer and those objects). *Vision and Art: The Biology of Seeing* by Margaret S. Livingstone is a great book that expands on this topic and much more. Other excellent books on composition are *Framed Ink: Drawing and Composition for Visual Storytellers* by Marcos Mateu-Mestre, *Pictorial Composition* by Henry Rankin Poore, and *Composition of Outdoor Painting* by Edgar Payne.

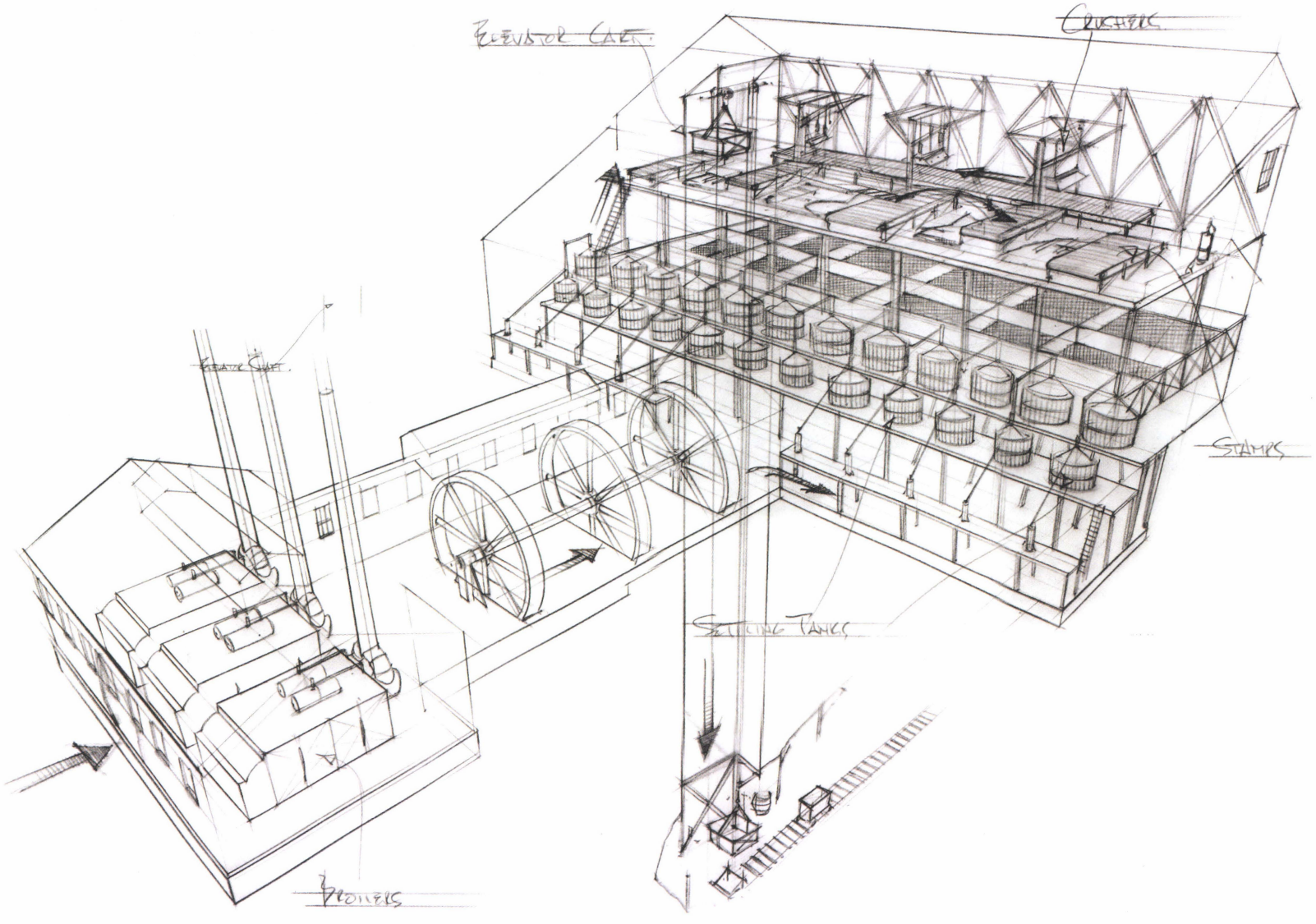

Here is an environment drawing for a fictitious video-game level done by our former Art Center student David Hobbins. Note how this environment is contained by the structure around it; it is a drawing of the interior of gold-mine buildings, with the exterior buildings lightly drawn around it. This type of environment drawing is a great way to do site planning. It can be used to communicate with other team members about the gameplay path through the environment, as well as the assets that will need to be designed in more detail and then placed in the environment.

David chose a POV that communicates a lot with just one drawing, and used his knowledge of 3-point perspective drawing to excellent effect. Looking at each of these elements on its own, and thinking about how it was drawn, it becomes manageable to do something of equal complexity. By layering the basic constructions for foreshortening and using Vanishing Points and perspective guidelines, it becomes possible to construct a drawing of this nature.

See more of David's work at: www.davidhobbins.com

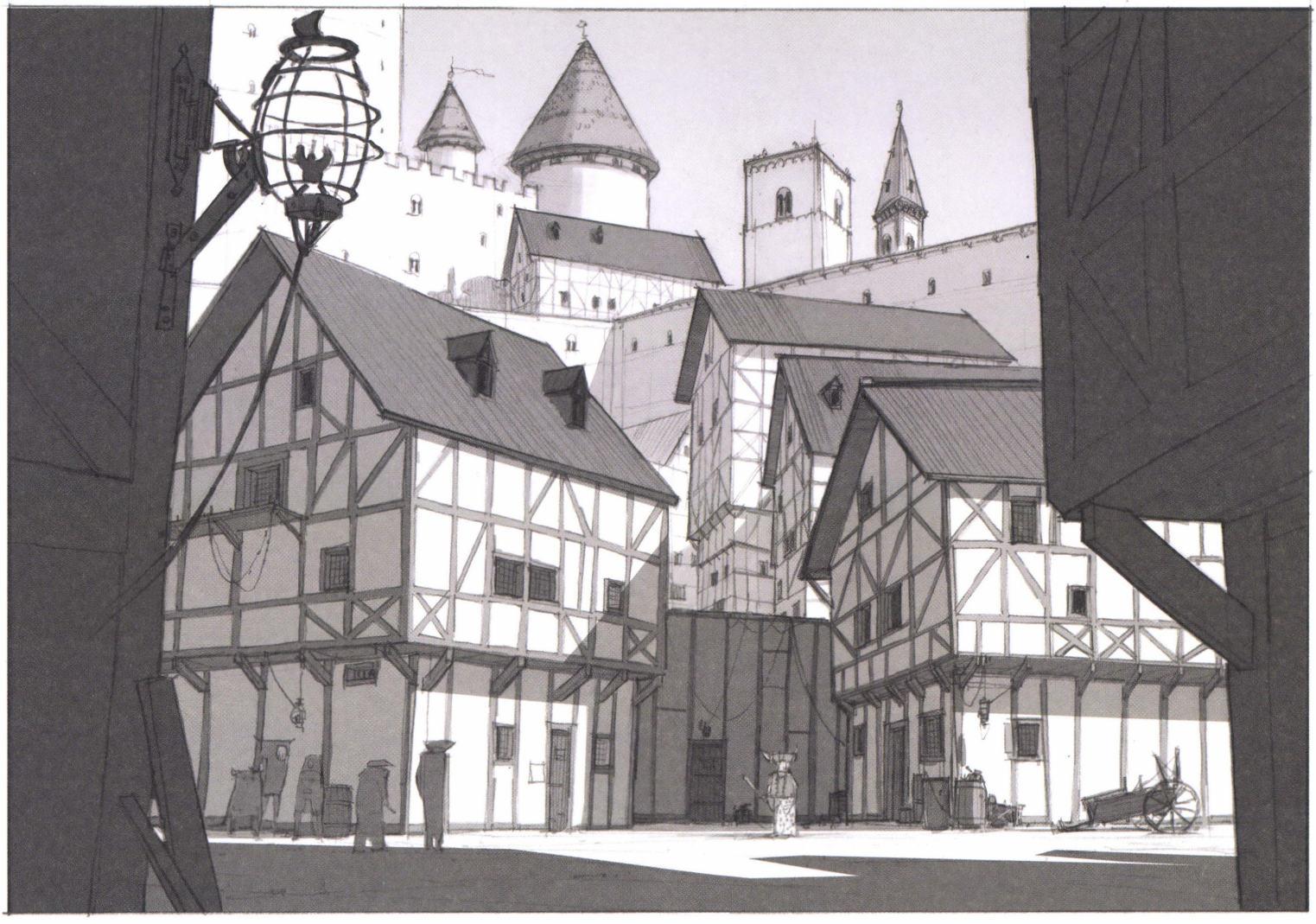

The detailing in this wonderful drawing is by our former student, Thom Tenery. He applied some simple values to it to help delineate the forms. Thom has employed all three of the things mentioned in the introduction to this chapter: linear perspective, occlusion and atmospheric perspective. Even if only line work is used to draw environments, try to vary the line weight based on the atmospheric perspective, since it is so effective.

Try to imagine Thom's drawing without all of the building details. See that he drew basic boxes with a simple gable roof repeatedly, adding a few vertical walls. Without the value and the details, this drawing would be much less appealing. Detailing a drawing is an important step in making it more successful, and being able to do that happens when you spend time improving your visual library. The composition of this drawing is quite creative; by using the dark framing structures in the foreground, Thom has the observer peering out of a dimly lit alley. More depth was achieved by having this strong foreground, then a middle ground where the focal point is on the figures, and then a background of the castle wall and towers. Thom's perspective grid is unique as well, as not all of the buildings are set at 90° angles in a simple grid. Instead they are rotated slightly from one another, giving his scene more dynamic angles. Lastly, notice the benefit of adding cast shadows.

See more of Thom's great work at www.thomlab.com

PHOTO UNDERLAY

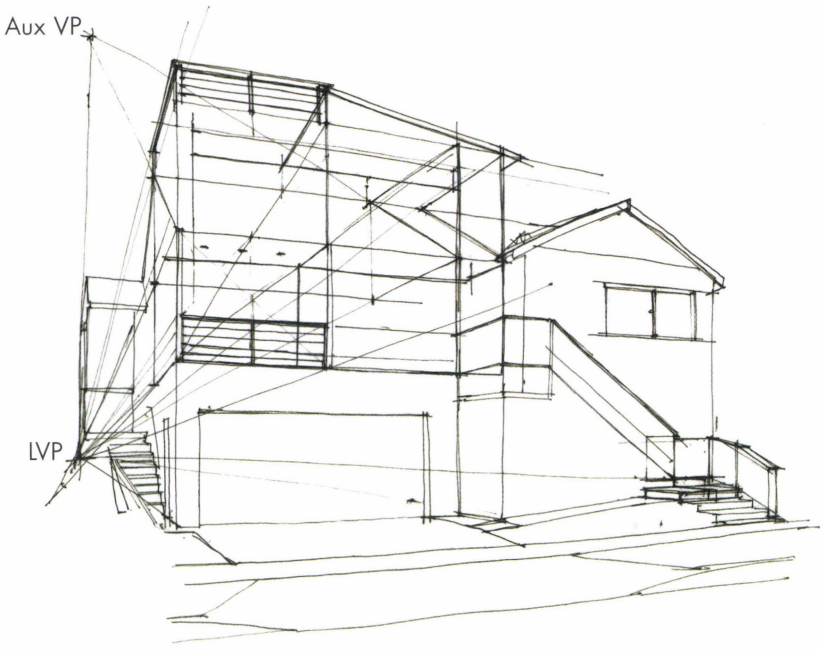

A great way to create a perspective grid quickly is by using a photo as an underlay. All of these sketches were done over the top of photographs similar to this one. Simply print a photograph and slip it into a pad of tracing paper. Find the Vanishing Points and add some more perspective guidelines as in the sketch above, right. The Left Vanishing Point for the main part of the house was found by projecting straight lines referenced on the house to the left until they crossed each other. Two good reference lines are enough to find the VP. After you locate it, add more guidelines from it, running through the illustration area. The Right Vanishing Point was off of the page, so a best guess

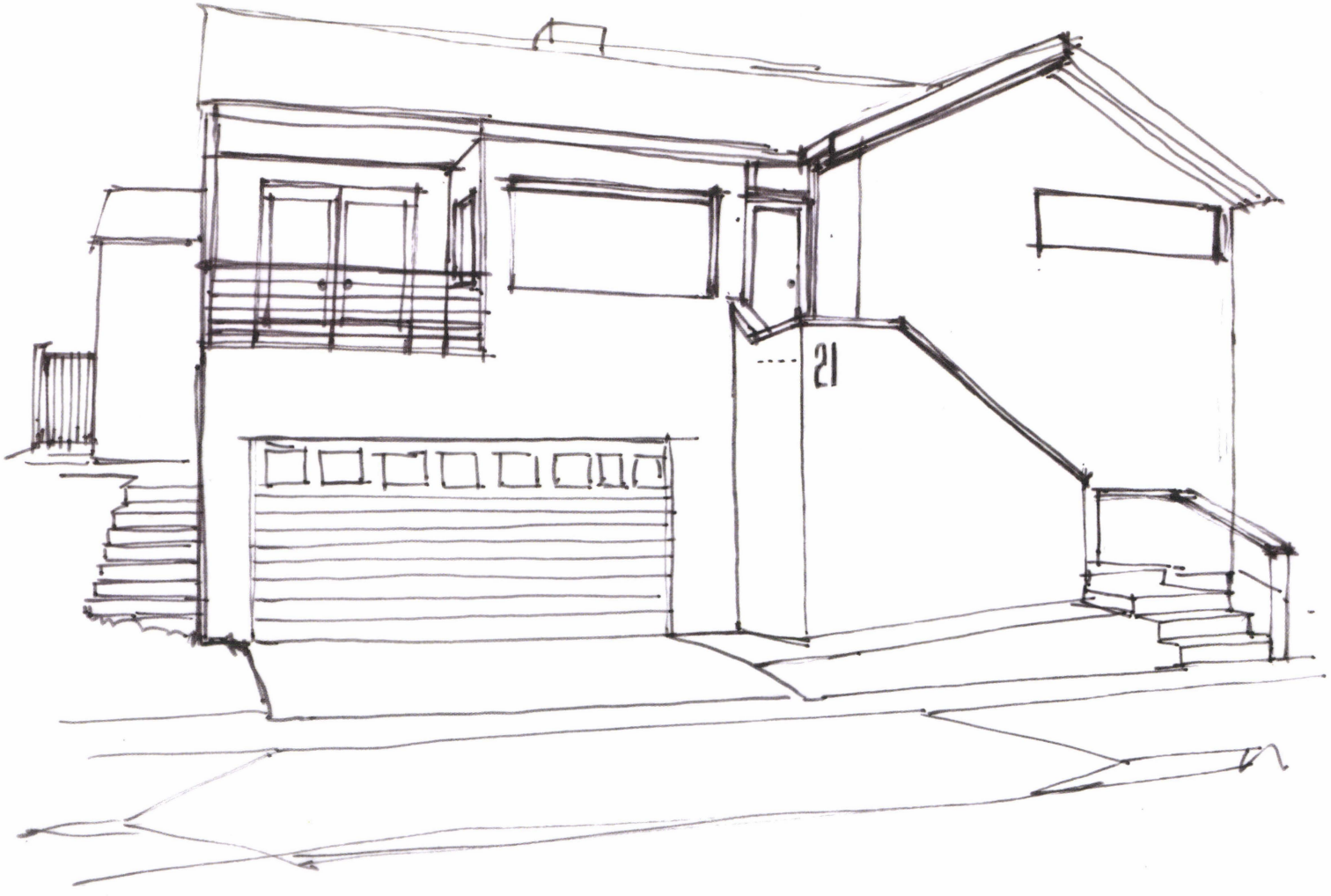

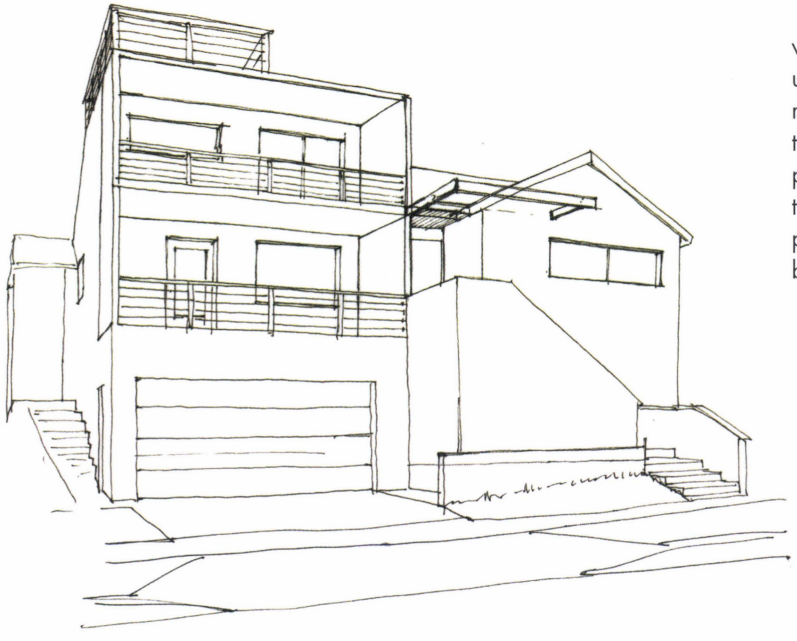

was made. Note that after finding the LVP, a vertical line was drawn up from it to locate the auxiliary VP for the tilted plane of the gable roof. Once there is a good underlay with extended guidelines, remove the printed photograph from under the construction drawing. Place the photograph nearby as reference while you try out design ideas. All of the sketches on both pages were done with a Sharpie Ultra Fine Point pen on tracing paper. For exploring ideas quickly, there is nothing better than working with a pen that cannot be erased.

SITE PLANNING

Now that the home remodel is finished, it's time to design something to build from the ground up! How about a studio in the backyard? The same perspective principles used to draw a simple box with a sloped top can be used to create a studio. If the height of the studio grows, it can become a tall building; and if more of those buildings are added to the scene, a city will quickly emerge.

On these two pages are the design drawings for a freestanding studio in a backyard. Using the basic perspective skills covered so far, a cube in perspective was estimated, and then foreshortening techniques were used to multiply that cube as a measuring device to more accurately estimate the proportions of the studio. The elevation sketch above was referenced when doing the perspective drawing below.

Once there is an understanding of the basics of perspective drawing, anything you dream up can be put on paper! After enough practice, only your imagination will limit what you can draw. The world expands; you can explore anything and everything in endless imaginary worlds that all, conveniently, fit into a sketchbook. This is what makes drawing environments so much fun.

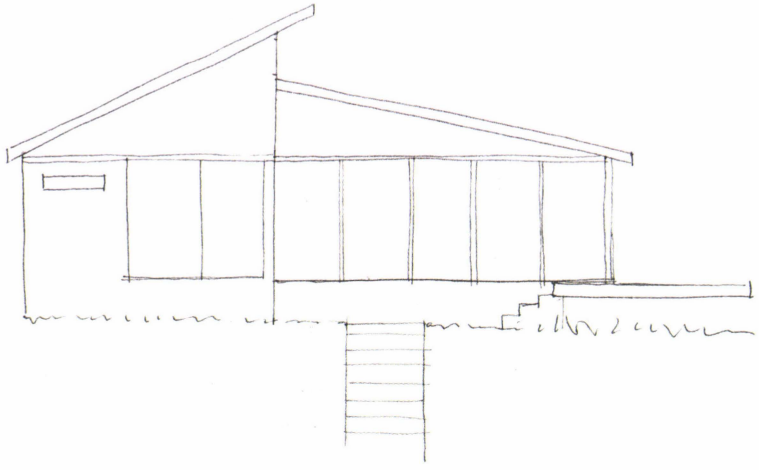

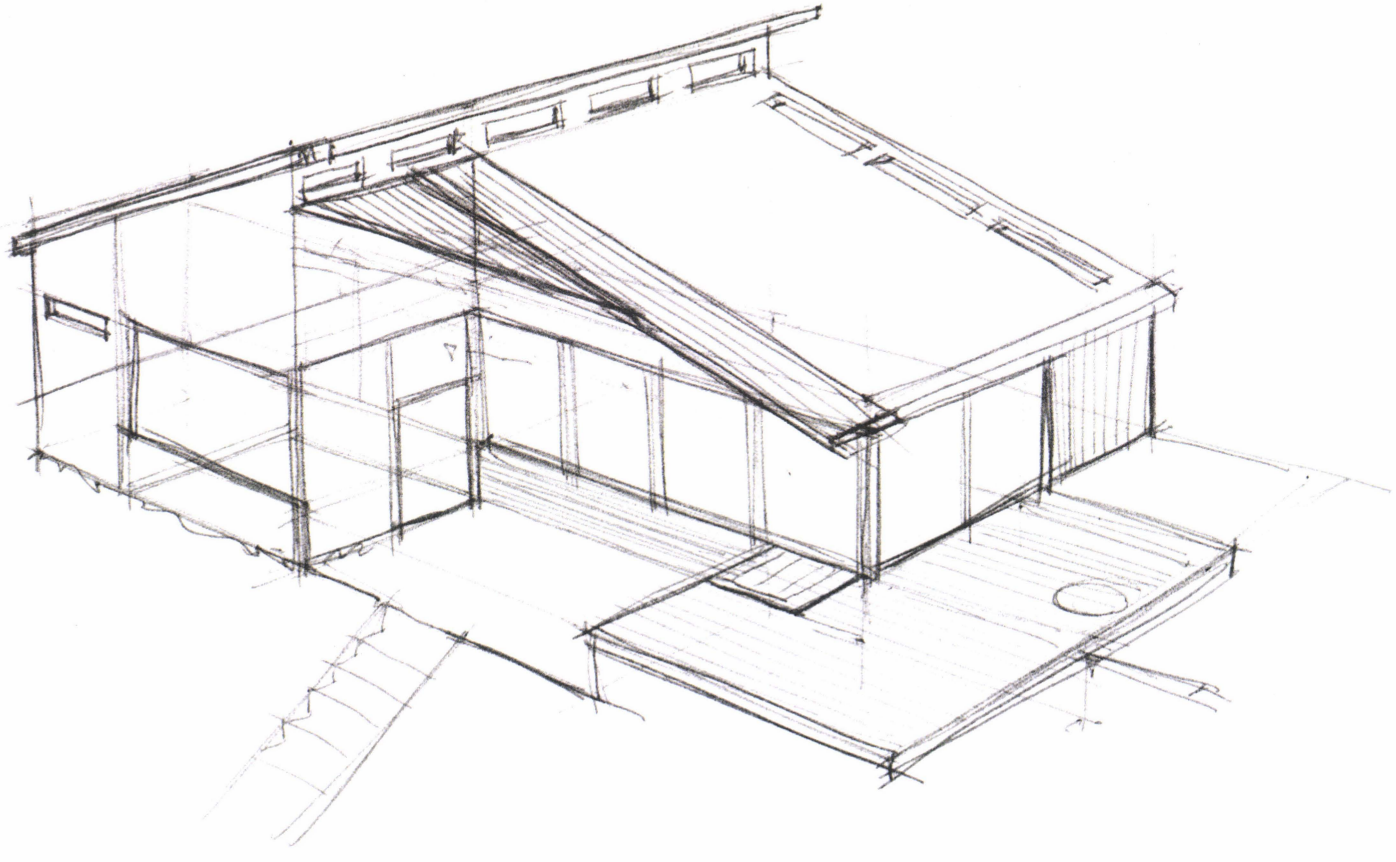

With just a sketchbook and a tape measure, you can walk into any environment, make some measurements, jot down a few quick sketches, and then go sit down and redraw those quick notations more accurately into something like the sketch below. For this drawing of the studio, the POV has been elevated higher than it was for the sketch on the previous page. When elevating this POV, it became important to switch from 2-point to 3-point perspective drawing. If it had stayed in 2-point perspective, it would have felt unnatural to the human eye. Look at some architectural isometric drawings, which have no perspective convergence, to experience this unnatural-perspective feeling. To modify a working drawing like this to make a new, more polished presentation, simply do an overlay.

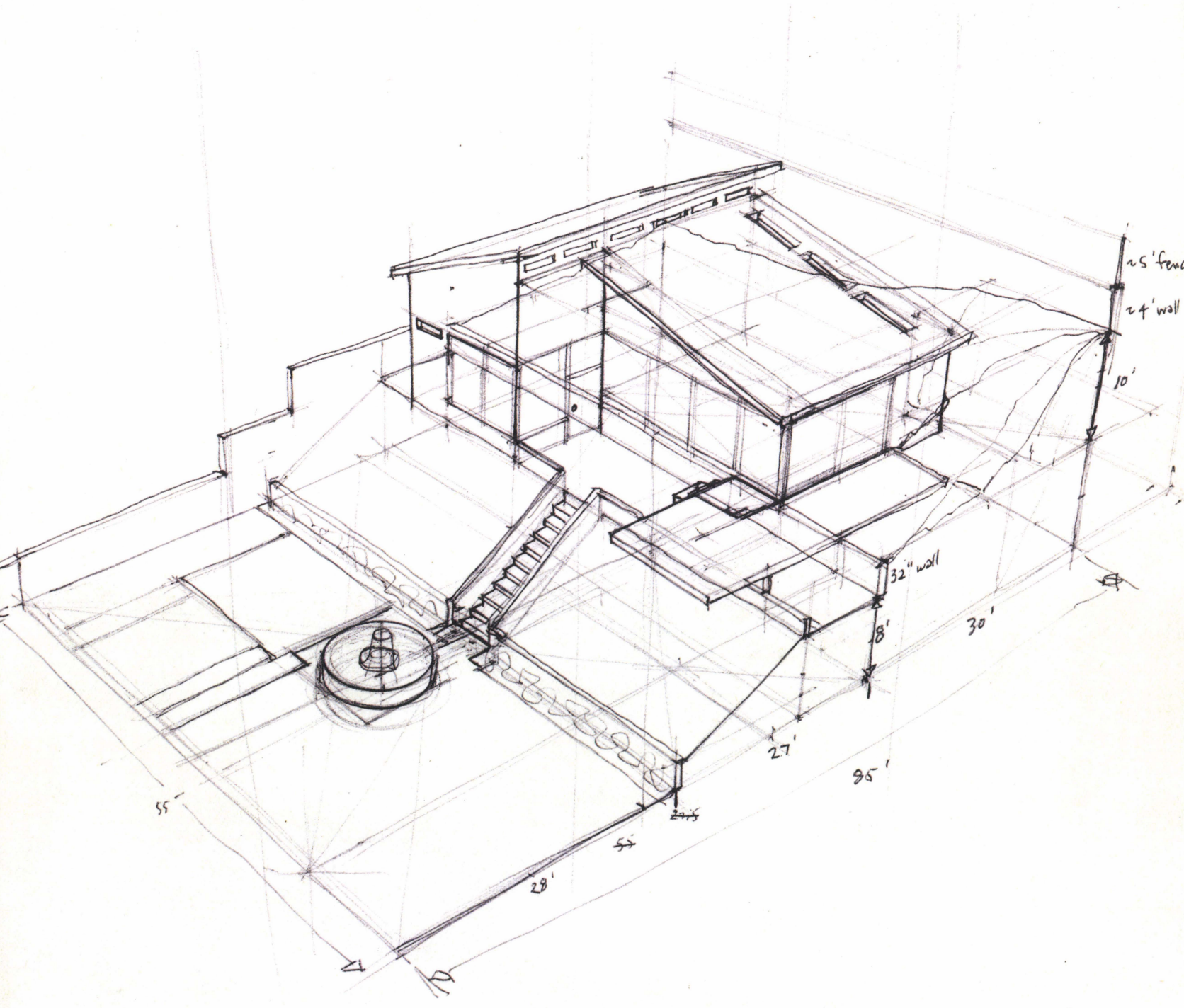

THUMBNAIL SKETCHING

It just feels natural to sketch environments using a bit of value. This is because one of the best ways to perceive depth is through atmospheric perspective. In this photograph of the San Francisco Bay, Alcatraz, and the hills of Marin County, you can see this progression of value contrast, with the most contrast (the brightest and darkest values) in the foreground. All of these values lessen as the amount of atmosphere increases with distance. This principle can be applied to sketches in a loose and simple way to give environments extra depth. Look at the value contrast in these thumbnail sketches, and note how it makes them feel more realistic.

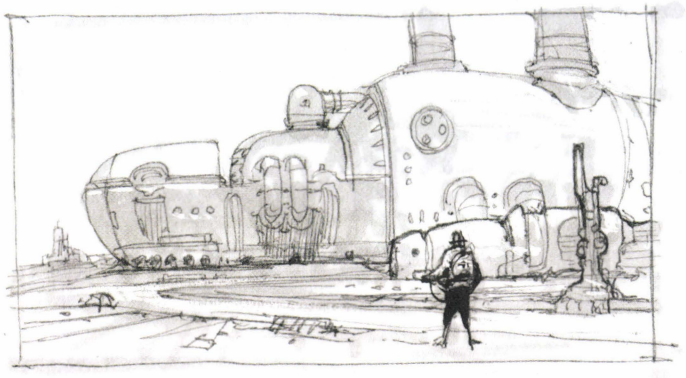

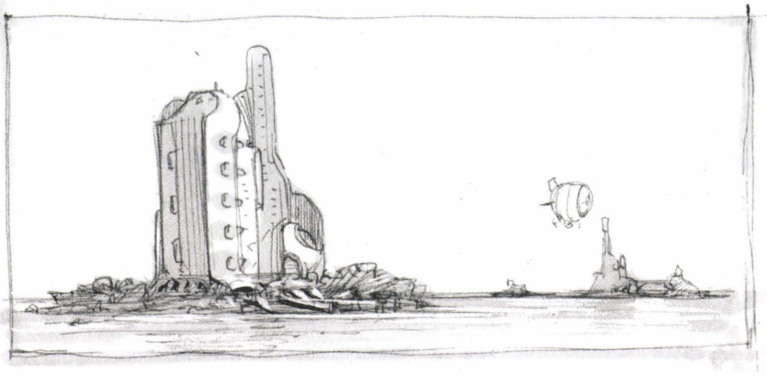

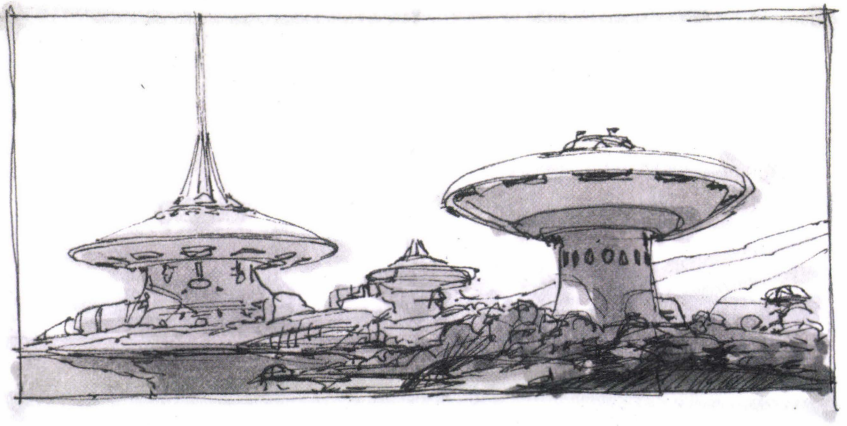

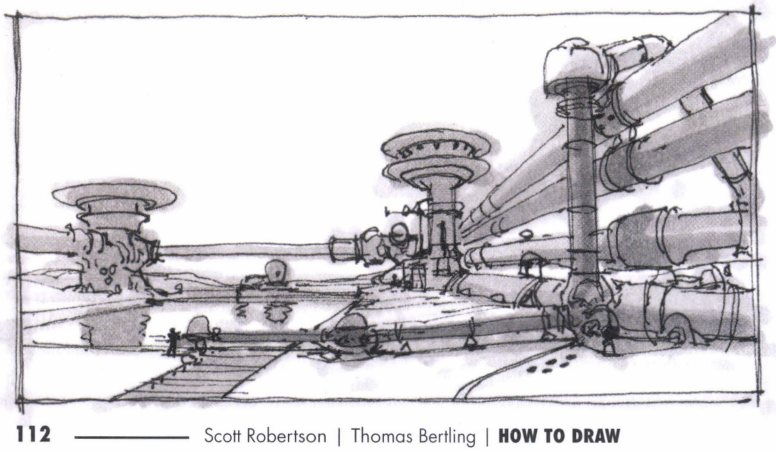

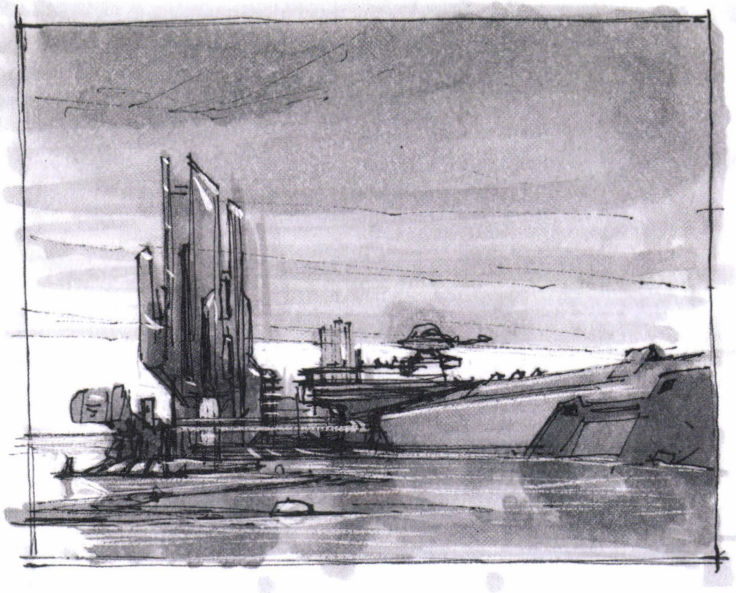

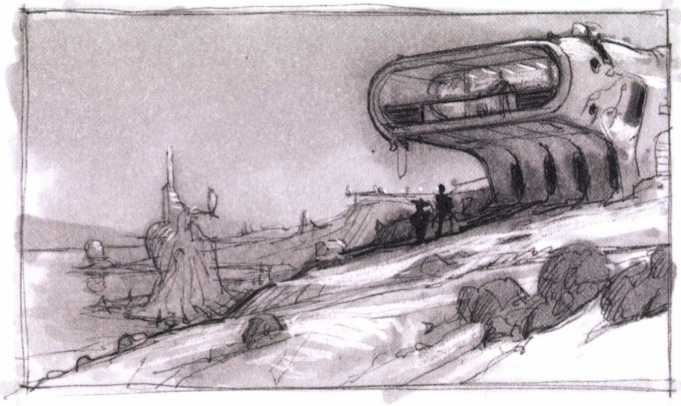

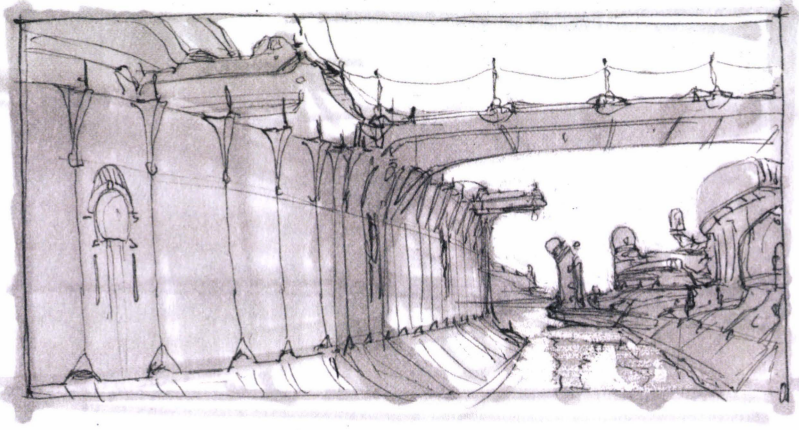

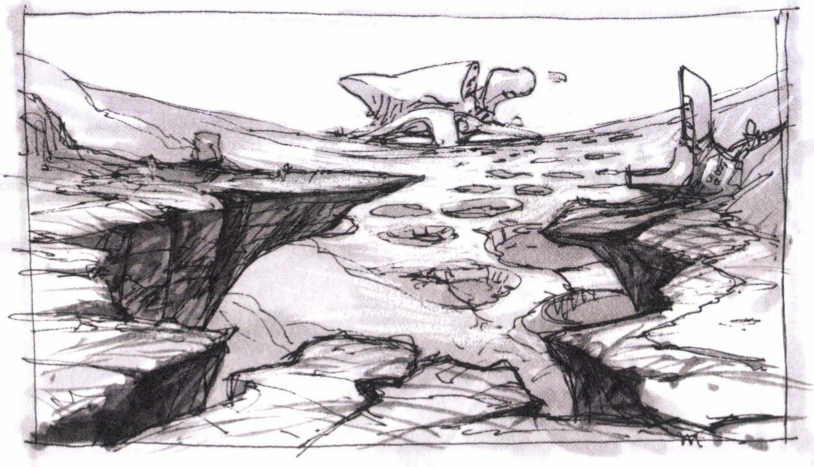

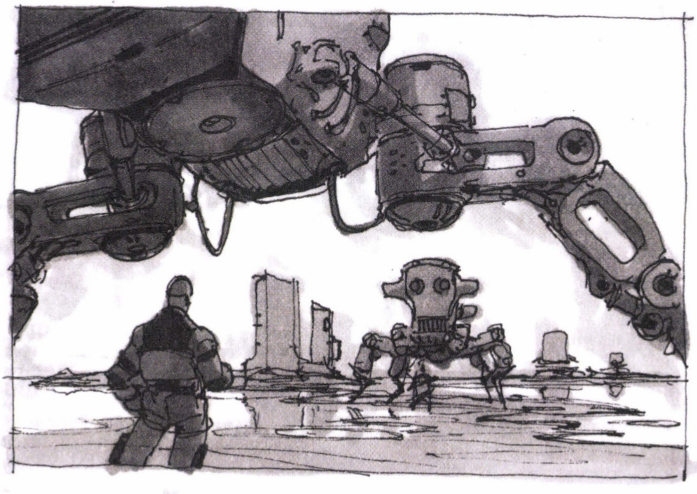

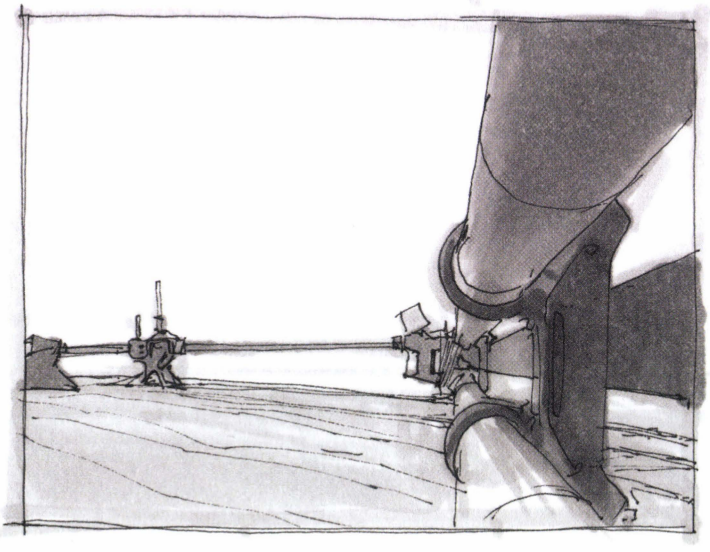

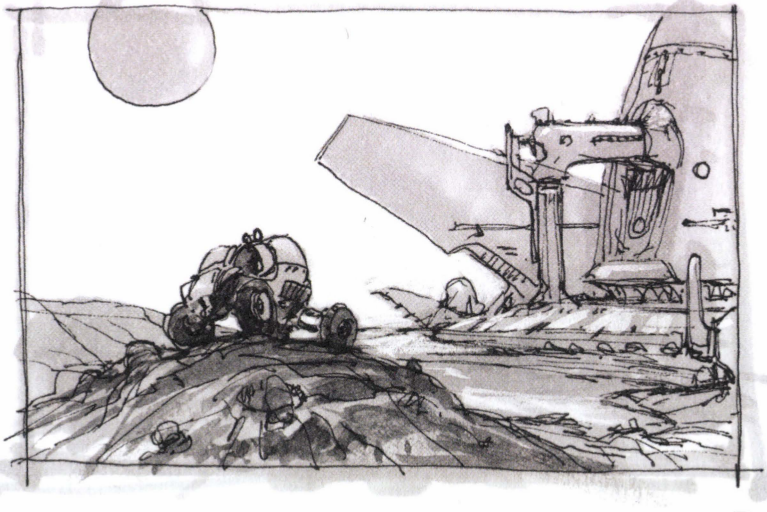

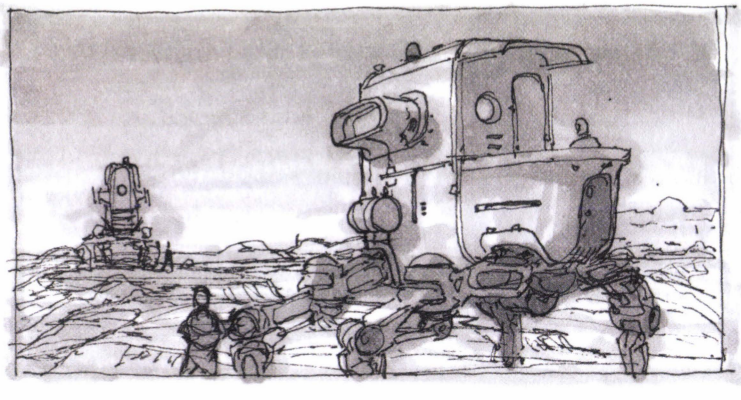

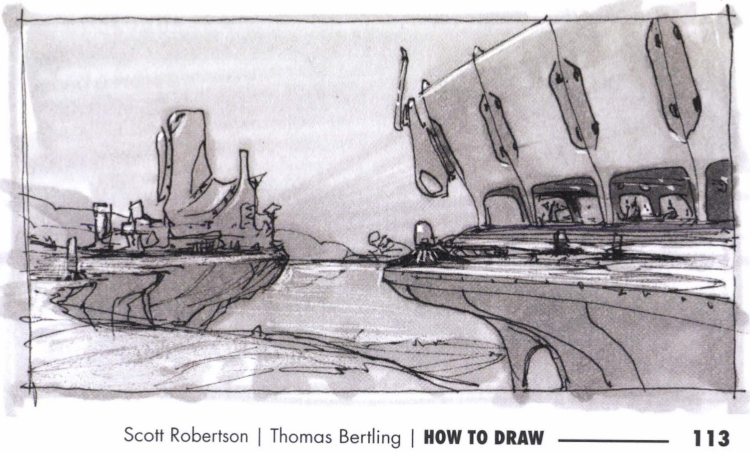

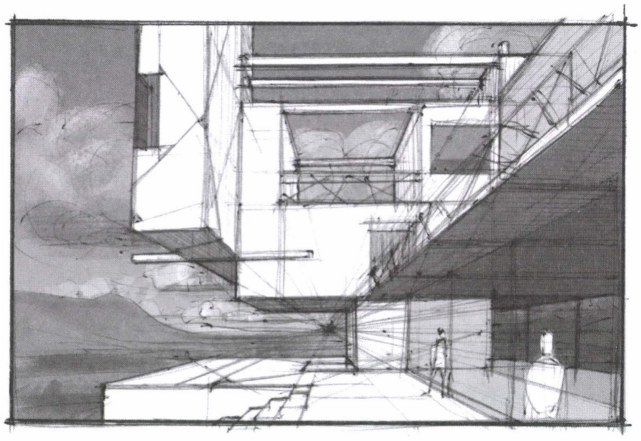

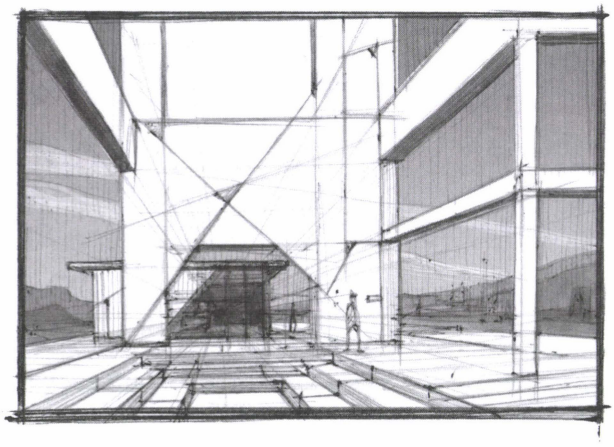

To create a believable thumbnail sketch, the basic steps are simple. First, draw the Horizon Line and add the Vanishing Point wherever desired. Next, add several radiating guidelines. Then, sketch the elements to the preferred dimension. Finally, add the desired dimension in the X-axis and a human figure for scale. You can also start with the figure if you need aid in scaling the architecture. Including landscape in the distance is a good way to set the building against some value, and cloud and mountain shapes can provide some contrast to the linear forms of the architecture. Both of the exterior 1-point perspective sketches above were drawn with a ballpoint pen and then a little value was added in Photoshop to help the silhouettes of the structure become more visible.

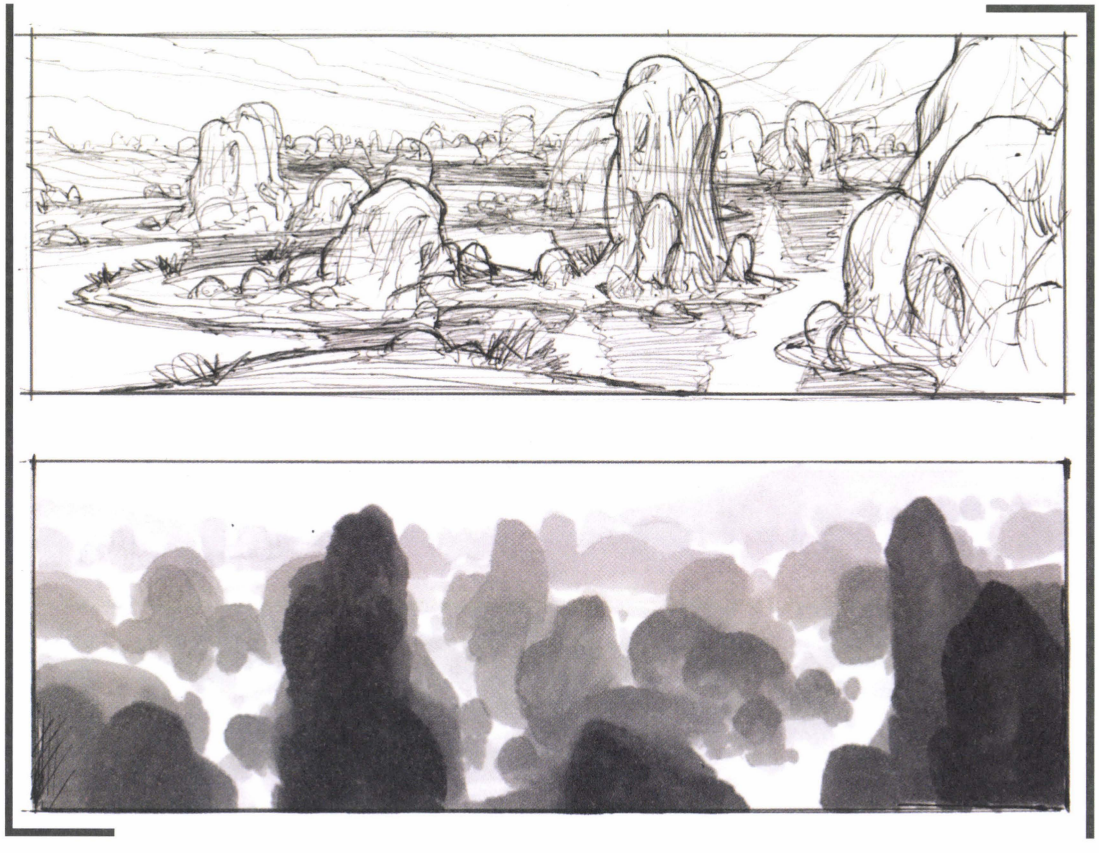

The line drawing of the strange rocky formations set into a watery environment can only rely on occlusion and perspective to communicate to us. The line weight was pushed more strongly around the foreground silhouettes to emphasize the occlusion of one rock grouping to the next. Even though the forms are soft and there are no straight lines converging to the horizon, there is still a strong sense of perspective just by changing the relative size of the rocks as they become foreshortened into the distance.

The value sketch of a similar scene uses no line work at all. Instead, value changes play up the atmospheric perspective. Here, the value change of each rock communicates the occlusion of the next, while the perspective remains the same as in the line drawing. Because objects are not surrounded by lines in the real world, the value sketch looks more real and feels more natural without the line work.

NON-PHOTO BLUE, THEN INK

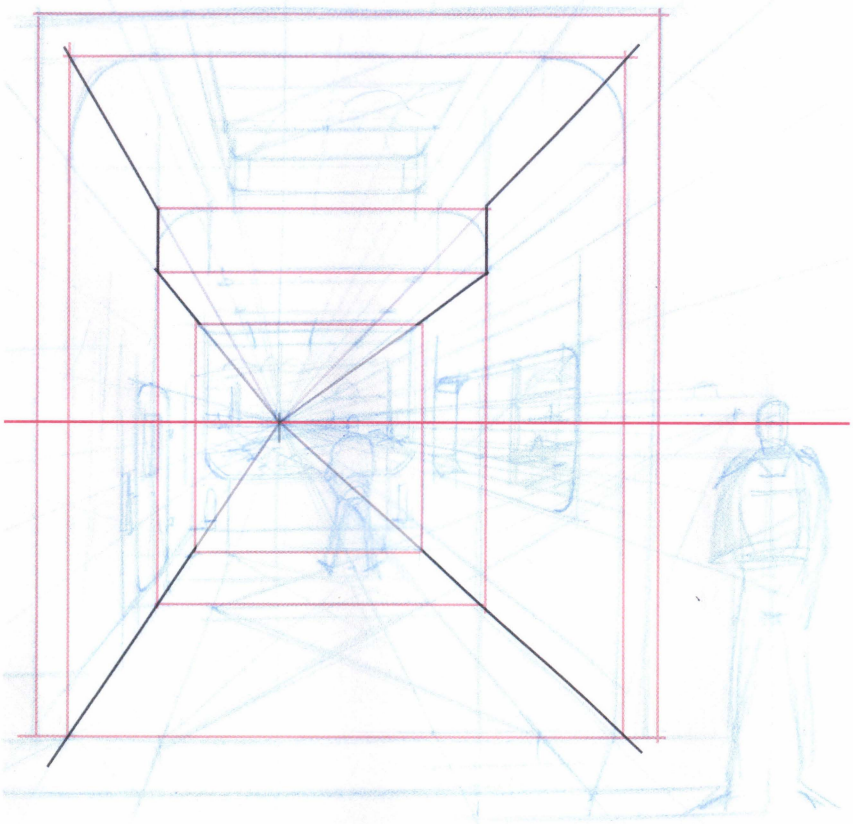

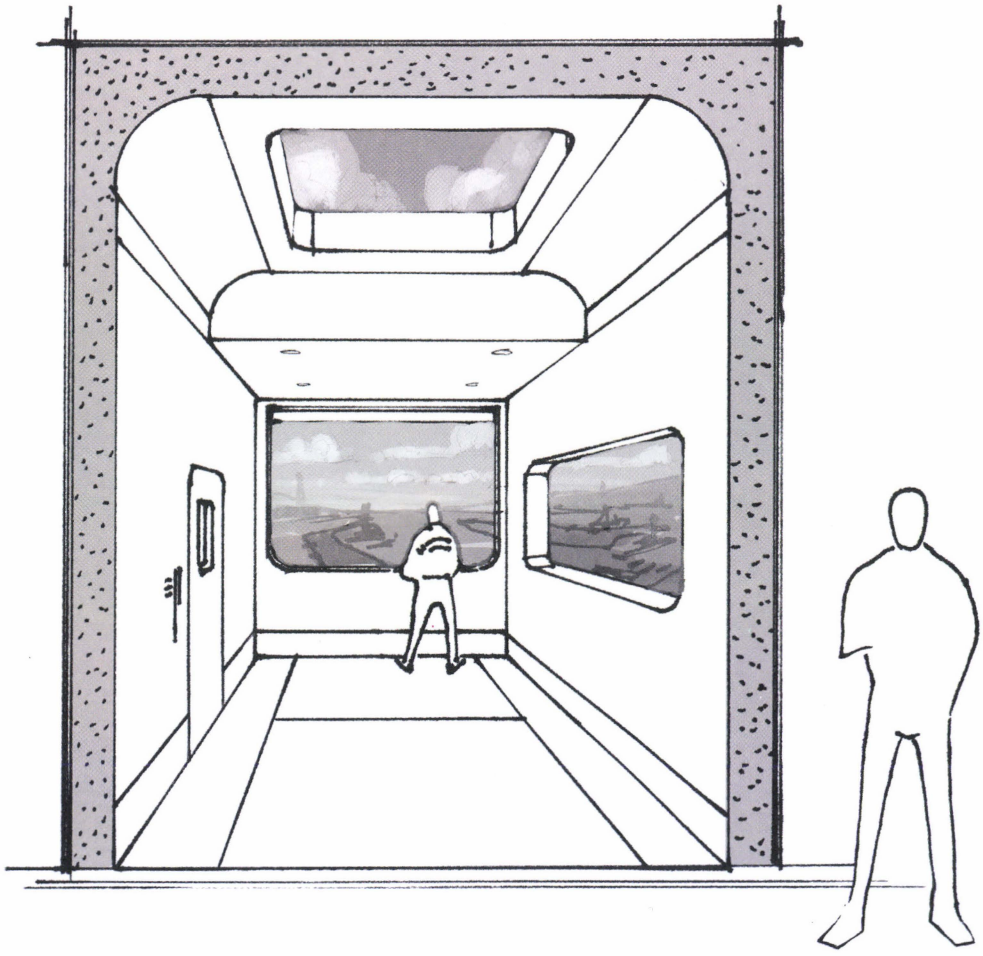

A very common way to work up concepts is by first using a non-photo blue pencil to sketch them out and then inking right over the top to make the final drawing. In the sketch to the left, the perspective construction is a very simple 1-point layout. The red Horizon Line runs right through the characters' heads; this means that the viewer's "eye level" is at the same height as the standing figures in this scene. The other red lines indicate the cross-sections of the room, and the black lines connect the corners of these sections back to the Vanishing Point.

The scene, at bottom, is of a room, extending out from the main structure where the observer must be standing. The gray cross-section indicates the connection of the room to the main structure. To achieve the feeling of being high in a building and looking out at a distant landscape, the environment outside the windows was drawn as if it were connecting to the base of the building, far below the observer's room. If the room were at ground level, the ground plane outside the windows would be drawn at the same level as the floor of the room; just imagine a lower POV for the fields, trees, and buildings outside the window. This can be a bit of a mind bender because even though the Vanishing Point and Horizon Line stay the same, by showing more or less of the ground plane you can effectively lift the room far into the air, or make it sit directly on the ground. Adding a little value to the landscape beyond the windows and to the cross-section makes it easier to understand the room without having to render it. Note the lowered ceiling insert toward the end of the room. By simply blocking out a few cross-sections, big form changes can be made.

This drawing was done on marker paper, and the black ink is from a Sharpie Ultra Fine Point marker that was bleeding a little too much and was not a great match for this paper. It is a good idea to test the desired mediums to determine whether they are compatible and confirm that satisfactory results will be achieved before doing a lot of drawings. After scanning the inked sketch, the levels were adjusted to get rid of most of the original non-photo blue line sketch.

SCI-FI ENVIRONMENT STEP-BY-STEP

1.

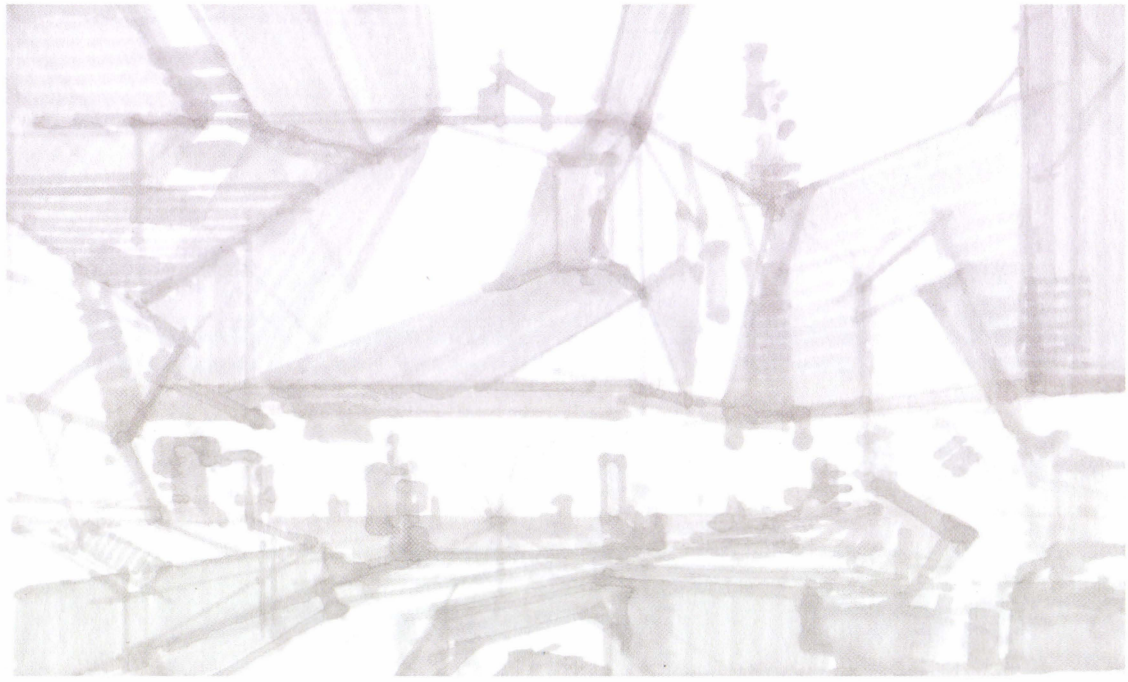

1. It is quite a common technique to use a very light-value marker, like a Copic N-0, to create a simple 1-point perspective grid and then lightly sketch architectural forms over it. To make the drawing look more realistic, add even more value, as this is how the world is seen; value changes create edges, and those edges will be drawn as lines.

2. Once satisfied with the design direction and the drawing, add line work over the top. The real world has no lines around objects, but the human eye understands this shorthand. This basic scene can be understood, but since the pen used here is 100% black, there is no atmospheric perspective because the weight of the line cannot be varied. There are three options to address this: use a pen or a pencil that allows varying the weight of each line, go back and heavily outline the object silhouettes in the foreground, or take this drawing into Photoshop and add atmosphere to reduce the contrast of the lines farthest away.

2.

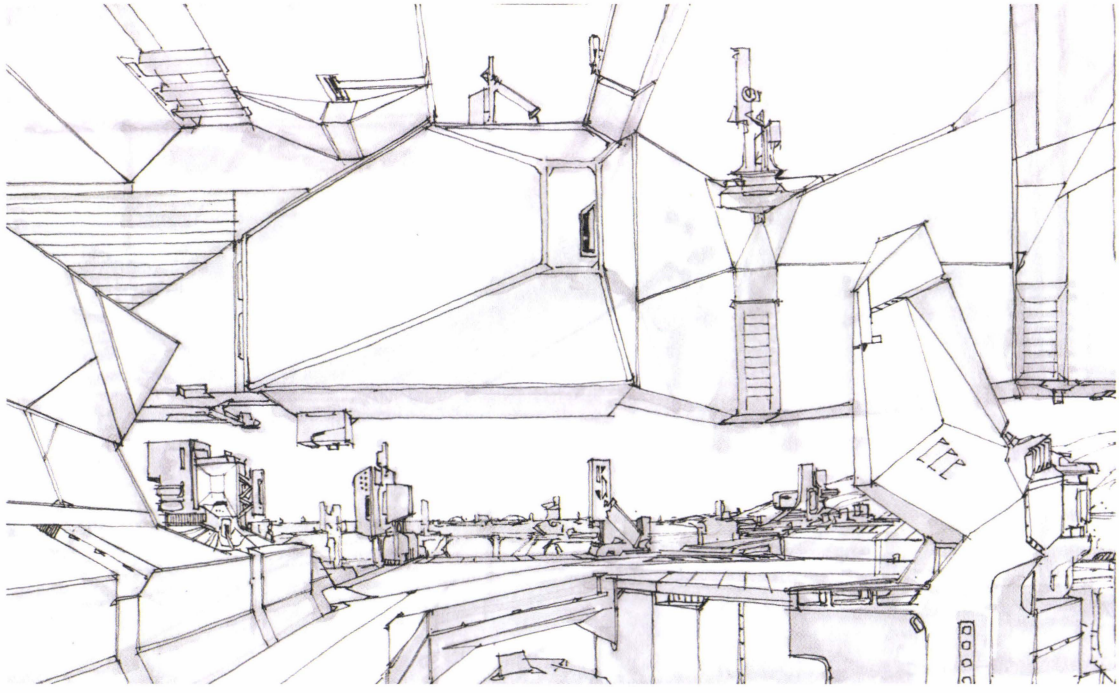

3.

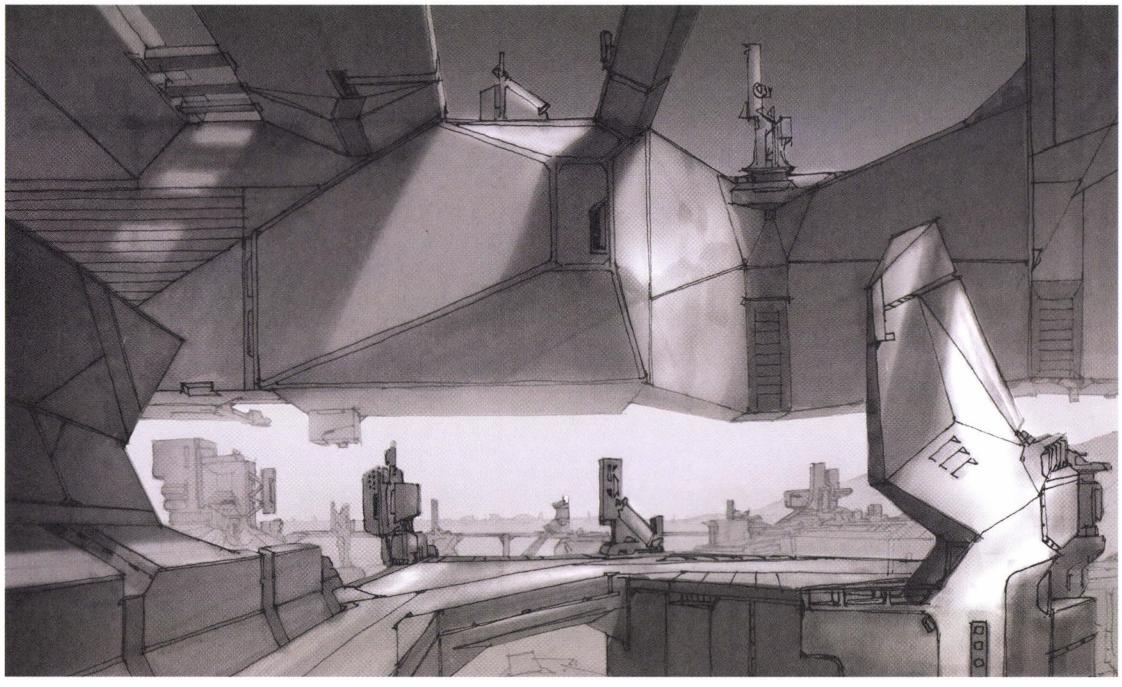

3. Add even more value to the line drawing to help establish atmospheric depth. This is a good way to make the environment feel more real even with the original line drawing still showing through. This step can be done in Photoshop. Notice that the line work out at the horizon was made much lighter to help this atmospheric effect, whereas the lines in the foreground are much higher contrast.

4. Below is an experiment where the sketch was built inside the 3D modeling and rendering program MODO to try to accomplish the same result using a different set of tools. In this program, once the lighting is set up properly, the value work is done automatically. The traditional-media version (completing the drawing and then rendering in Photoshop) took about two hours; the MODO version took only slightly longer. As 3D modeling becomes easier, it will become something to consider weaving into your workflow. This will be discussed further in later chapters.

4.

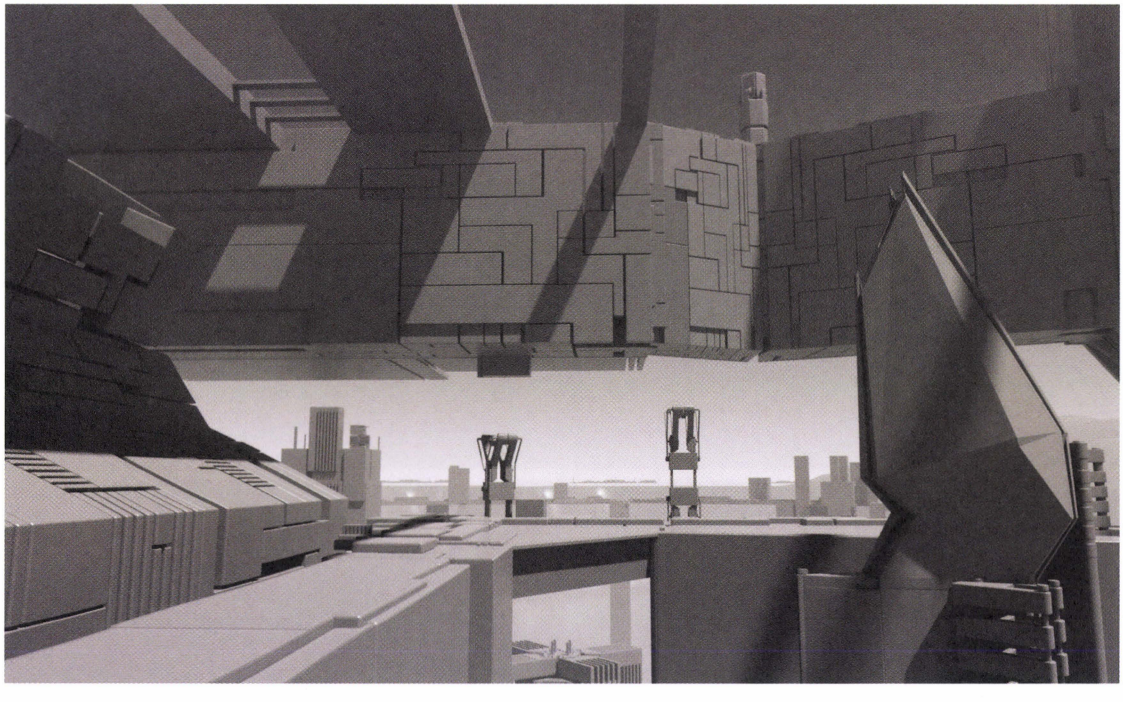

WARP THAT GRID WITH A WIDE-ANGLE LENS!

The photographs below were all taken with a 180° fish-eye lens. That means that whatever is directly left, right, above, below, and in front of the lens is seen in the picture. The interior of the U.K. taxi has not been cropped and the circle of the lens can be seen. The other three photos have been cropped. This lens increases the Cone of Vision to 180° so the viewer can see as much of the surrounding environment as possible. Any parallel lines that converge to the single Vanishing Point at the center of the image, which is where the lens is pointing, do not bend; they look like they would in any normal perspective construction. On the facing page are some loose environment sketches that were done in an effort to emulate this warped fish-eye-lens perspective grid.

Remember, any of these photographs can be traced over to create grids to achieve the same feel, or the grids can be sketched, guessing at what they might look like. Either way is fine. On the next pages, sketching perspective grids from your imagination will be demonstrated.

The values added to the line drawings on the right were done in Photoshop. None of the box forms were defined by the values, only the silhouettes of the structures were. Some of the undersides were darkened a bit, but otherwise the value application was done to add a touch of atmospheric perspective to make the line drawing easier to read.

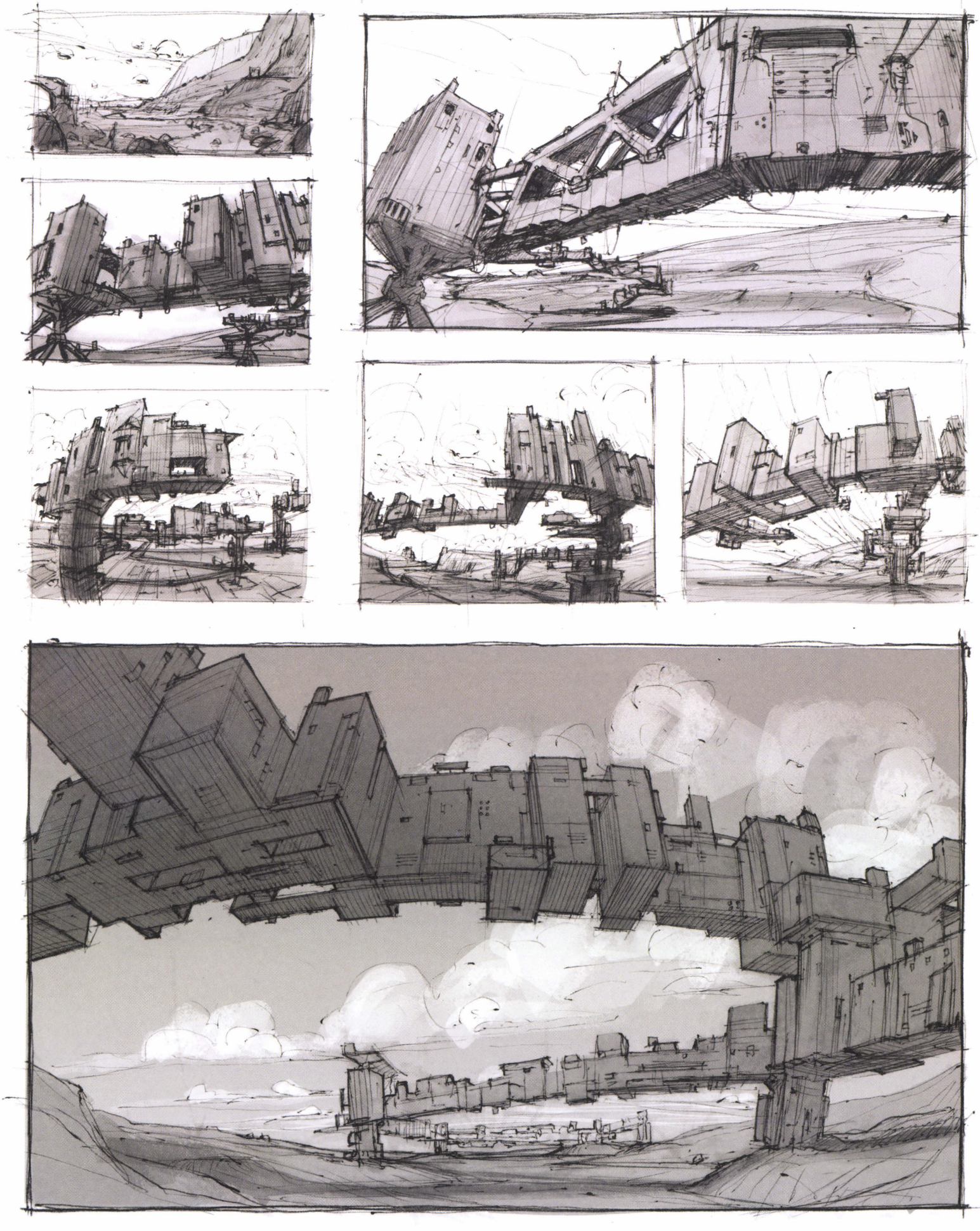

OUTDOOR ENVIRONMENT SKETCH, STEP-BY-STEP

1. 2. 3.

1. A light marker was used to sketch a picture frame and the Horizon Line. A few basic 1-point perspective guidelines extend into the foreground to define a ground plane. The most important thing to consider in the first step is where to place the Horizon Line. This sketch uses the compositional idea of the "rule of thirds" and the Horizon Line was placed at the lower third of the composition. Placing the Horizon Line dead center usually makes the composition feel static.

2. The small tick marks on the left and bottom edges were placed to divide the frame into thirds, vertically and horizontally. A few distant mountain shapes were added as was a loosely defined landmass extending toward the viewer.

3. A larger building was added to the mid-ground. When blocking out these rough building forms the composition should be the focus, not getting the perspective exactly correct. That comes next.

4.

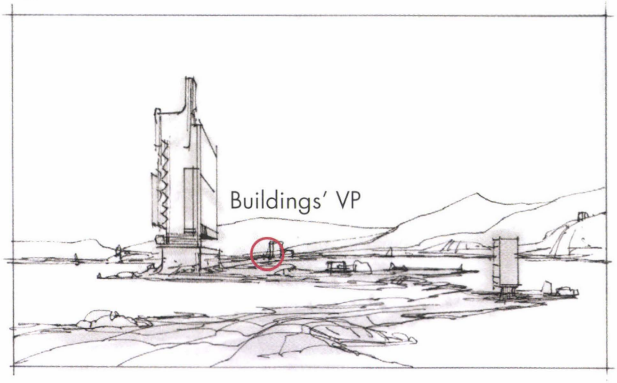

5.

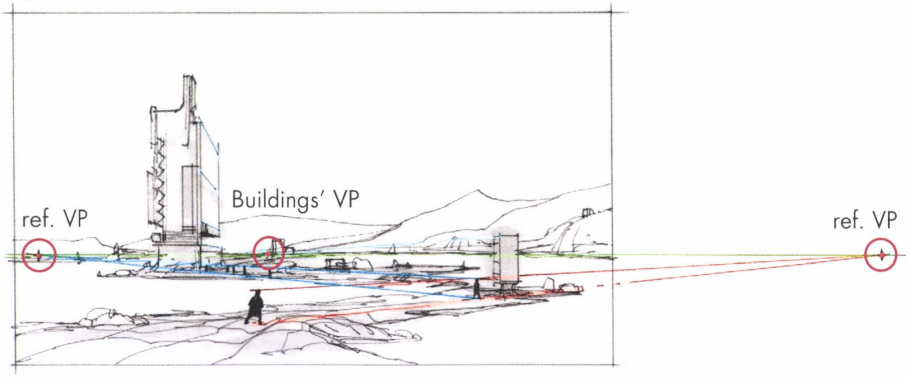

4. Since this is quite a simple 1-point perspective, there is not that much to construct and a single VP on the horizon is really all that is needed to give the buildings more volume. This stage of the line drawing over the loose marker composition was done with a 0.25 Pilot HI-TEC pen on Borden & Riley 100s marker paper.

5. Next, figures were added to the scene. Since the ground is relatively flat, the simple perspective transferring of scale construction was used to make sure the figures in the distance were the same height as the one in the foreground. The reference VPs make this a simple thing to do which can really help the relative scale of the structures be more easily understood in the scene. Adding human figures is the easiest way to indicate the scale of everything in that scene.

6.

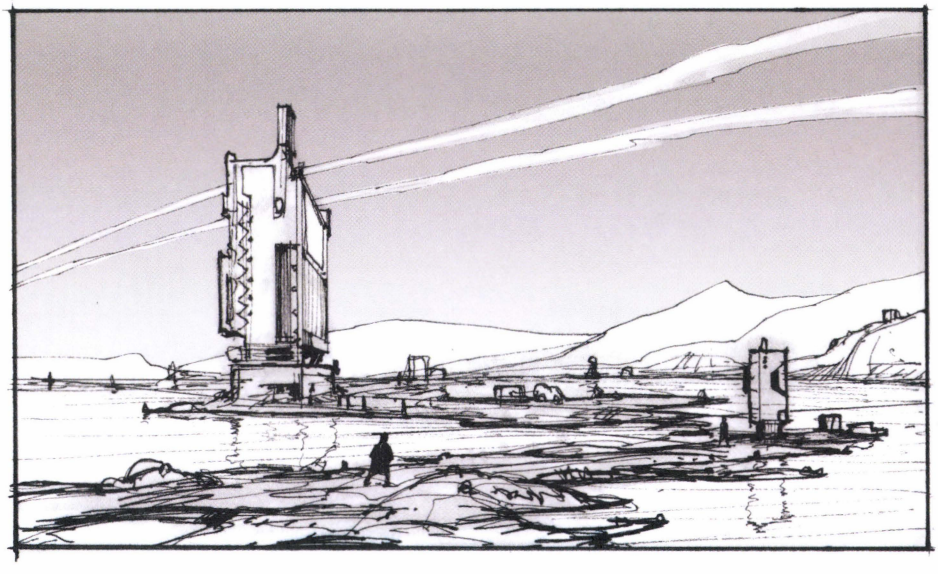

6. Here is the finished environment sketch of a zigzagging landmass with a few structures rising from it, water on each side, some mountains in the far distance and several human figures added for scale. This is a one-to-one reproduction of the sketch. The finishing touch was to add some heavier line weight with a 0.5 Pilot HI-TEC to emphasize the atmospheric perspective and the overlaps that occur with the buildings in front of the mountains and sky. The thin clouds, or jet trails, were added last to provide softer, more organic shapes to contrast with the more geometric forms of the buildings. They were intentionally placed behind the larger building to add another overlapping element, which increases the sense of depth.

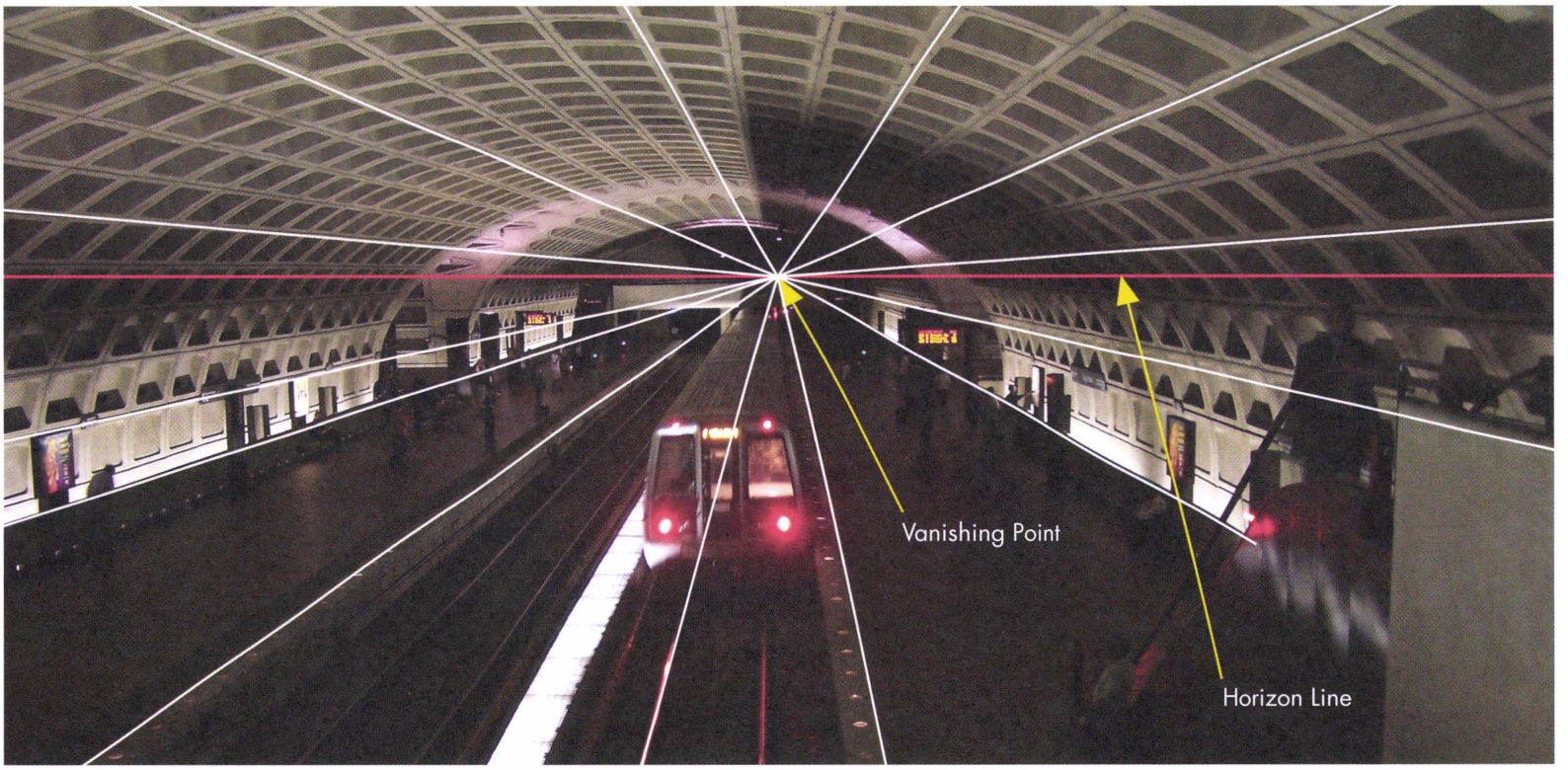

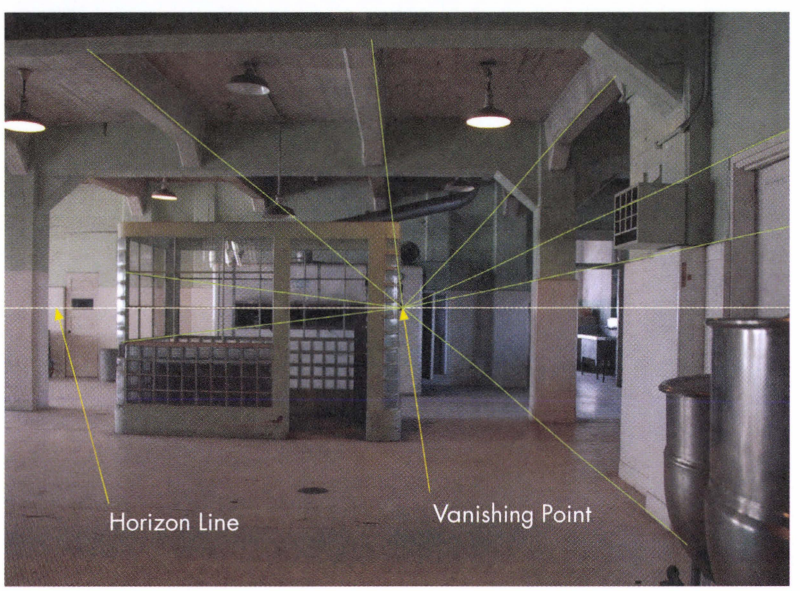

It's important to become skilled at recognizing the underlying perspective anatomy of any environment you're in, to help build a visual library of images that can be referenced whenever sketching environments. Look at the three very different environments pictured here. At first glance they might seem like distinctly different drawing challenges, but upon closer observation they are actually all the same type of 1-point perspective. Whether interior or exterior, they all follow the same construction techniques. The top image, for instance, is really all about setting one cross-section for the ceiling and then simply repeating the relief pattern into it using the auto-foreshortening construction. When drawing environments, always try to be patient because many times it's the adding of the repetitive details that brings more realism and interest to your work.

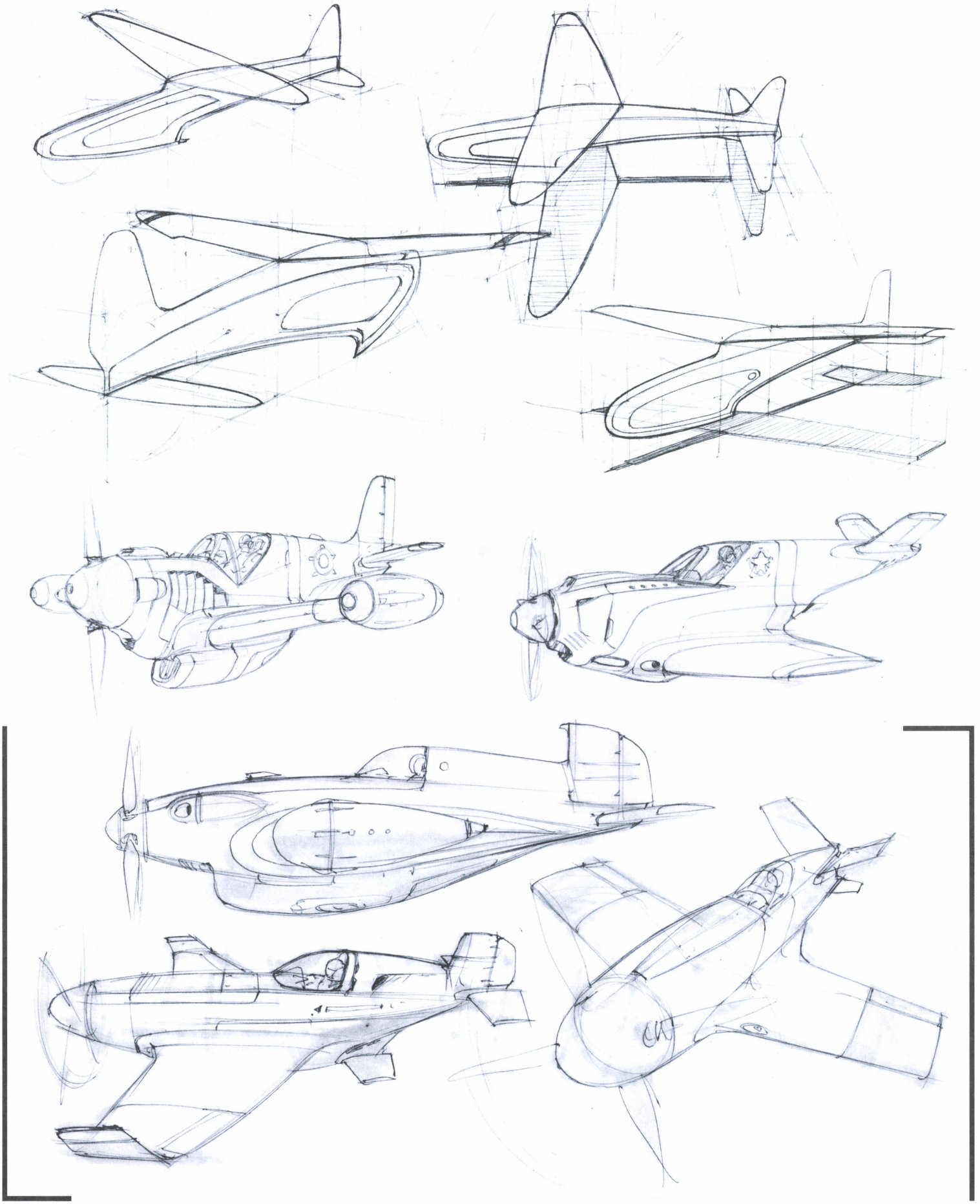

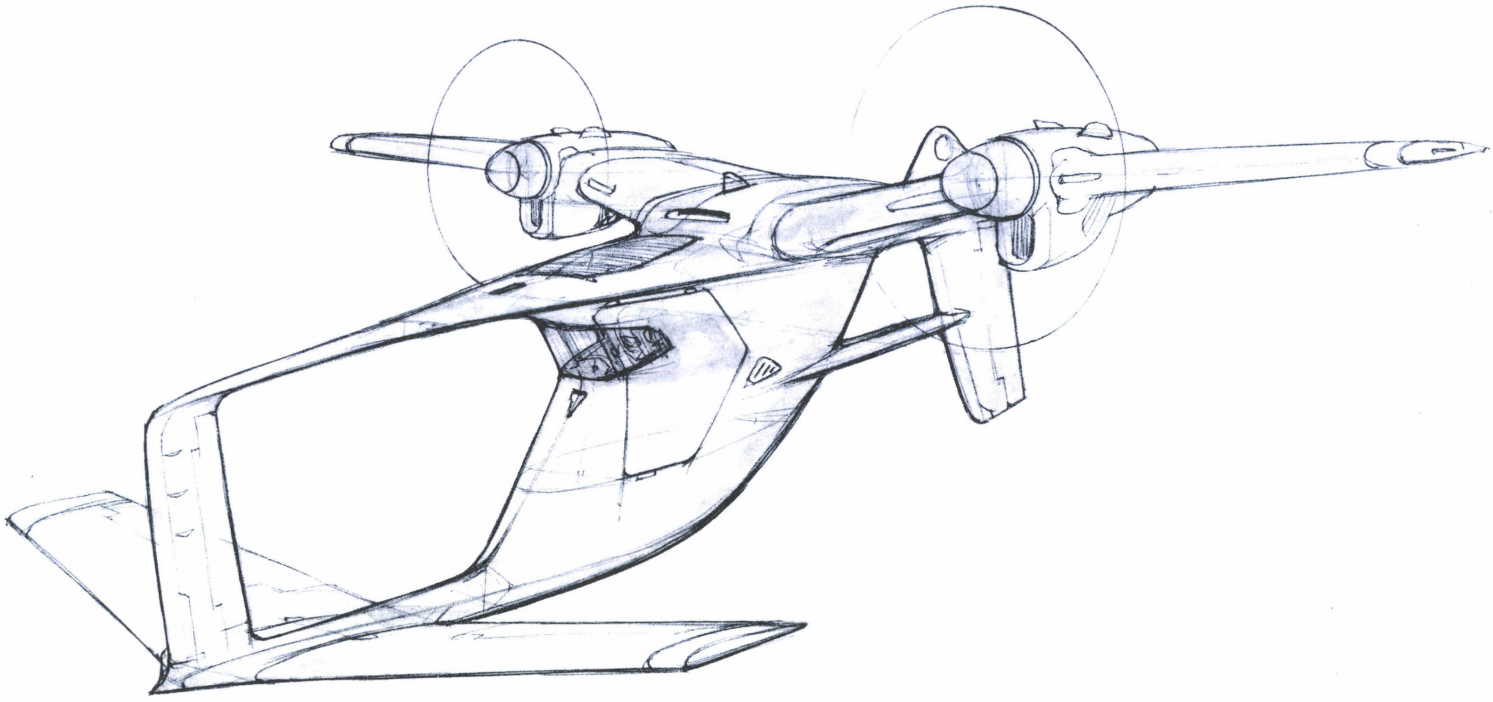

CHAPTER 08

DRAWING AIRCRAFT

This chapter will touch on some of the most helpful and frequently used perspective-drawing techniques for drawing aircraft. As with many of the drawing techniques, the core principles can be adapted to any subject because every form can be described with X-Y-Z section lines.

When trying to imagine any new vehicle or other functional object, it is very helpful to do some research first into how real-world examples of the object actually work. If you are more interested in design than illustration, this research into how things work is probably even more important than researching how things look. Nice illustrations of existing airplanes can be done by looking at photographs or by visiting aircraft museums and drawing from observation. But to design and draw objects from your imagination, the perspective-drawing techniques presented in this book need to be applied.

AIRPLANE ANATOMY

Rudder

Controls the left-to-right turning of the plane, which is called "yaw."

Flaps

During take-off and landing the flaps lower to increase the size of the wings, which improves lift capability at low speeds.

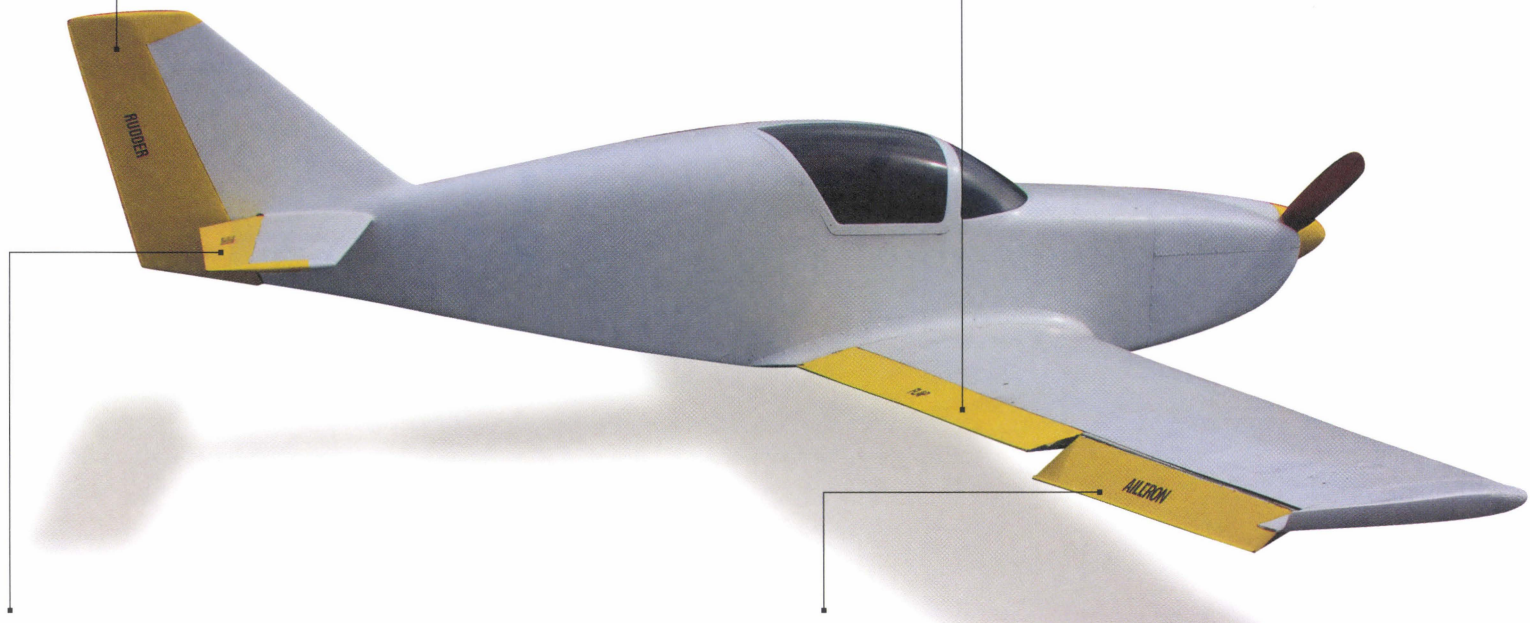

Elevator

Controls the lifting and lowering of the nose of the plane, which is called "pitch."

Aileron

Controls the lifting of one wing and the lowering of the other wing, which is called "roll."

The previous page shows the most important control surfaces to include in aircraft designs to make them realistic. These pictures were taken on a visit to the Oakland Aviation Museum. Museums are great places to visit to learn a lot about a specific subject in a short amount of time. Take a lot of photographs in addition to reading about the exhibits. Many of these photos find their way into Photoshop renderings as collaged-in layers that add nice realism to the pieces. Keep these types of research trips in mind when launching into the design of any subject that you have not designed before or that might be a candidate for further research.

VISUAL RESEARCH

One of the best ways to learn more about the structure and function of an object is to build a scale model of something like it before sketching an imaginary version. This process is often overlooked as a way to improve drawing skills, as it might seem counter-intuitive. However, designing and drawing from the imagination is much like building actual models, so this technique works very well to give hands-on knowledge of what to draw and how all the elements work together to form the whole object.

Here are two examples of these types of scale models. On the following page are several photographs of various details to possibly include when drawing aircraft. Although aircraft are being used as the subject matter, this same research technique can be applied to any subject of interest.

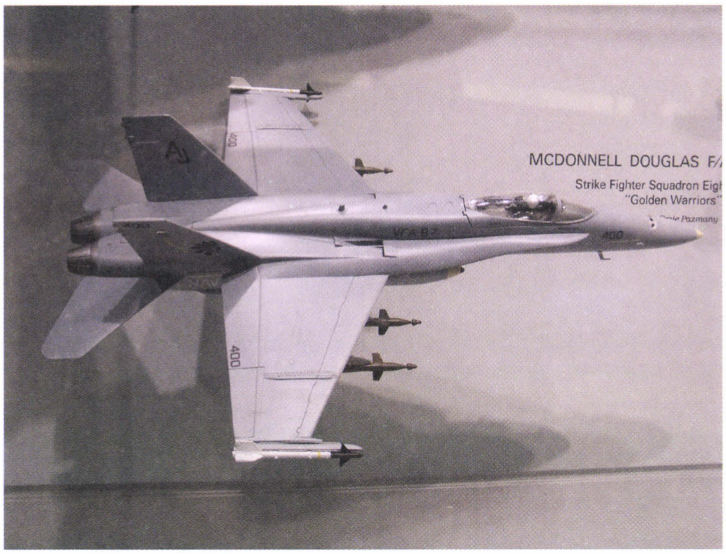

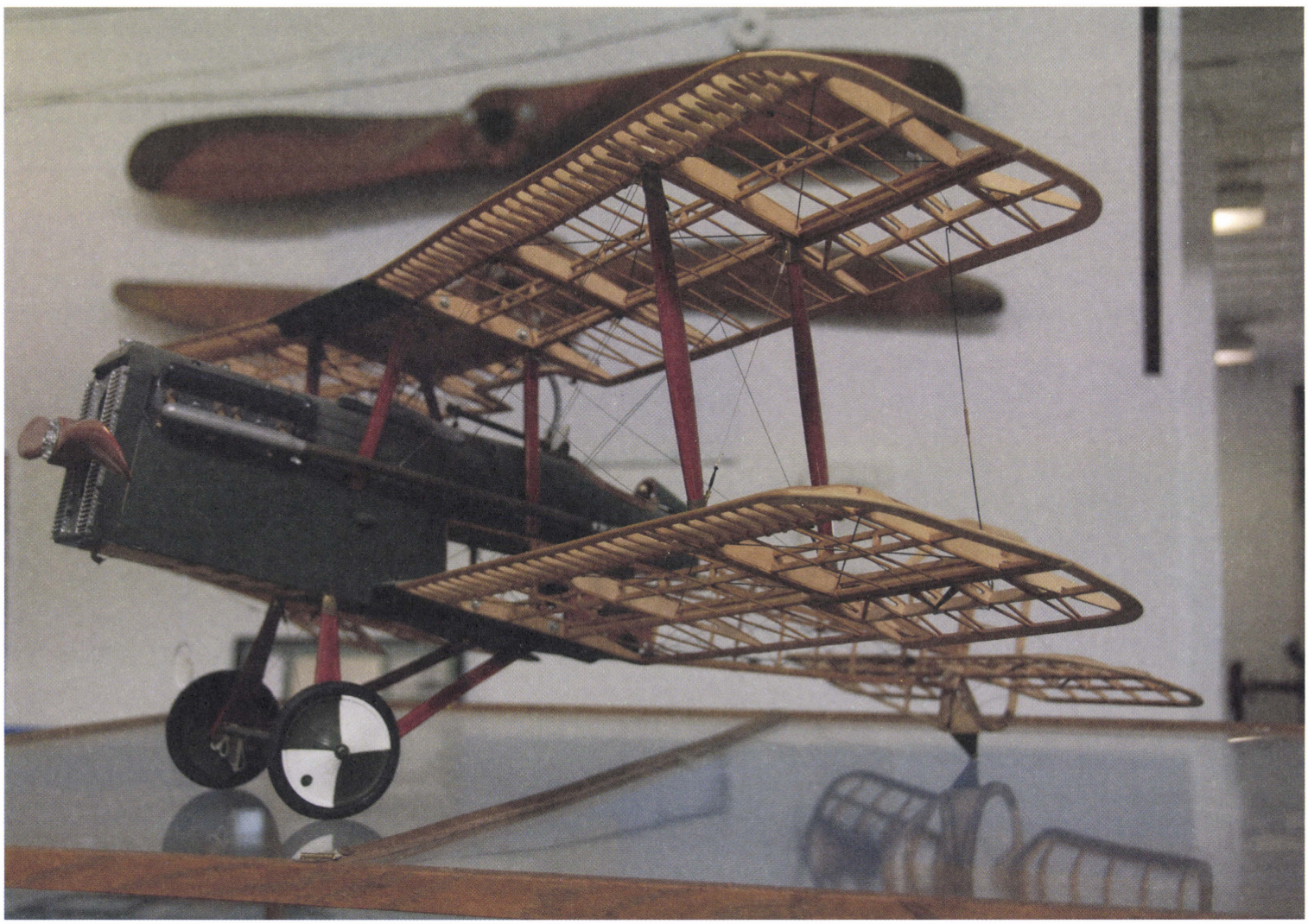

RESCUE

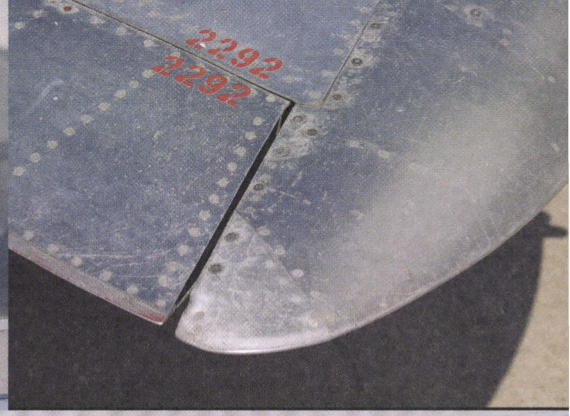
2292
2292

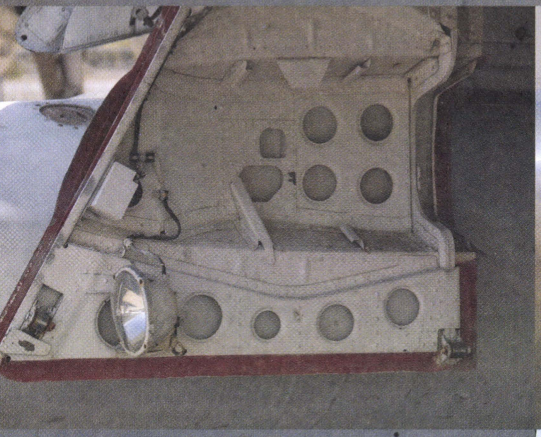

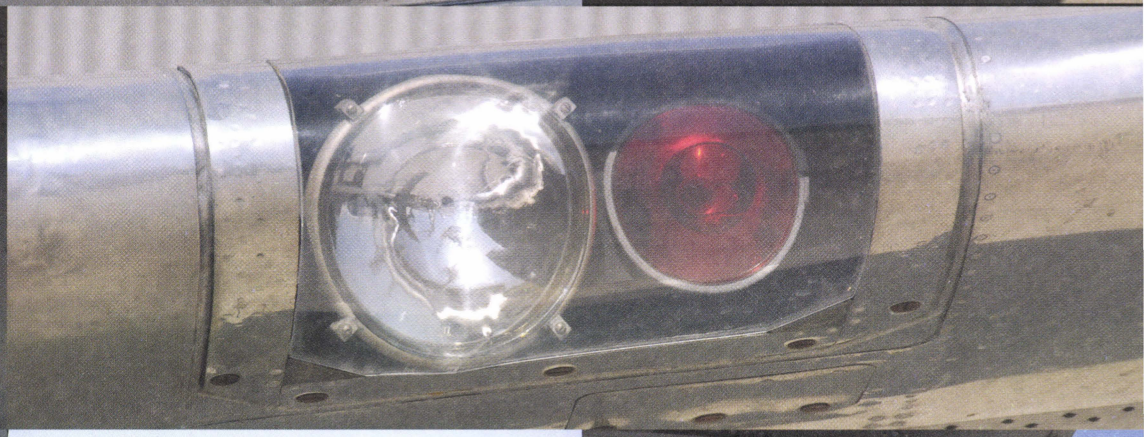

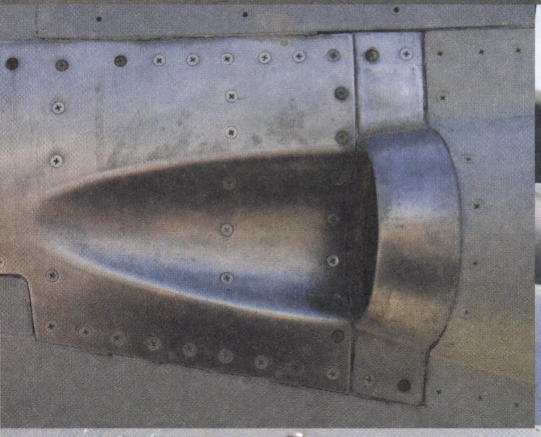

U.S. ARMY BT-13A
A.C. SERIAL 41-21216

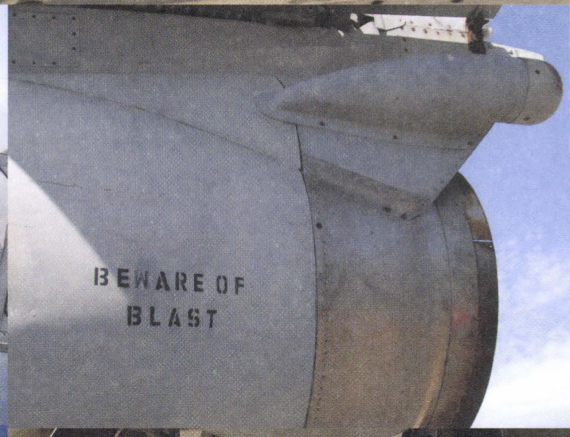
BEWARE OF
BLAST

80 OCTANE

INTAKE

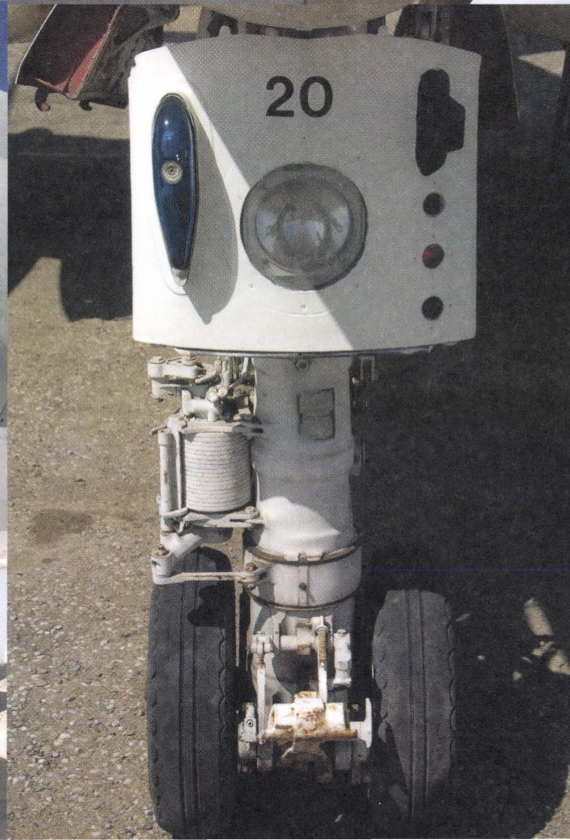
20

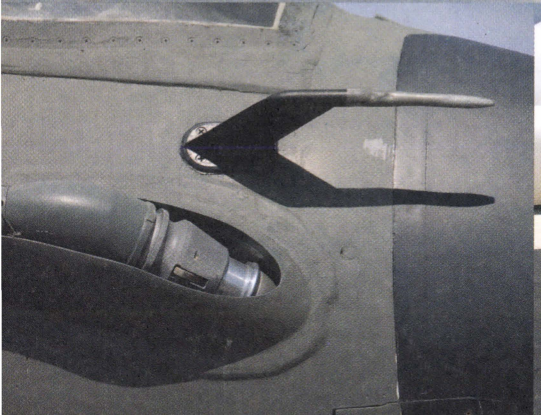

DRAWING FROM OBSERVATION

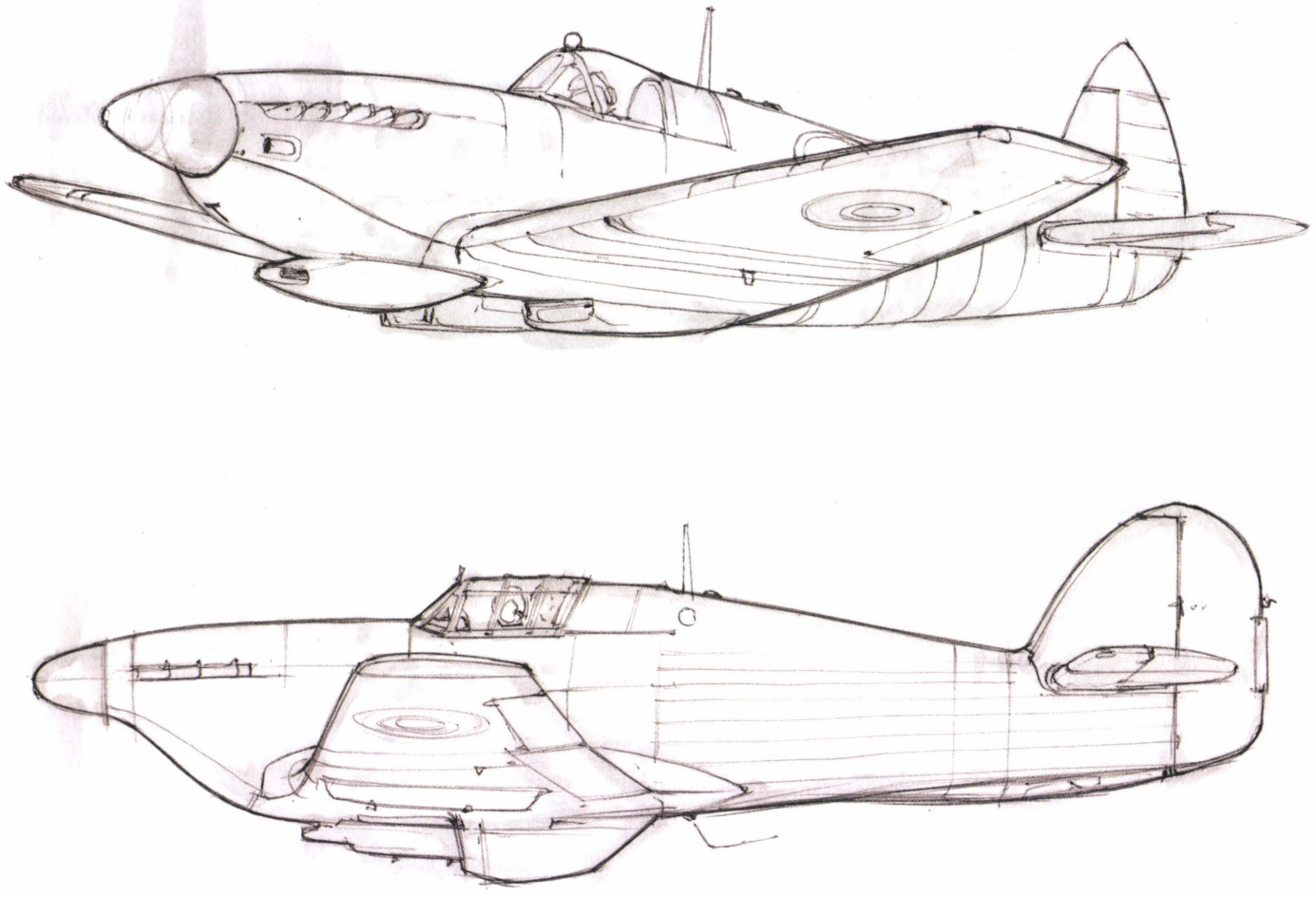

In addition to building models, visiting museums, and taking pictures, drawing a subject from observation is helpful too. Focus on seeing the object as an arrangement of distinctive 2-dimensional shapes, ignoring 3-dimensional forms for now, with no concern about "drawing through." Observe proportions, graphics, and functional anatomy. When our students have practiced drawing from observation, absolutely beautiful drawings have been the result, but when asked to do a drawing of the same quality of an imaginary object, the skills (other than line quality and detailing) tended not to carry over.

After doing a few pages of these types of studies with an eye toward understanding as much as possible about the subject, unique designs that follow will tend to look much more believable as a result. Take time drawing the design elements that make a real object look real. This will quickly increase your visual library.

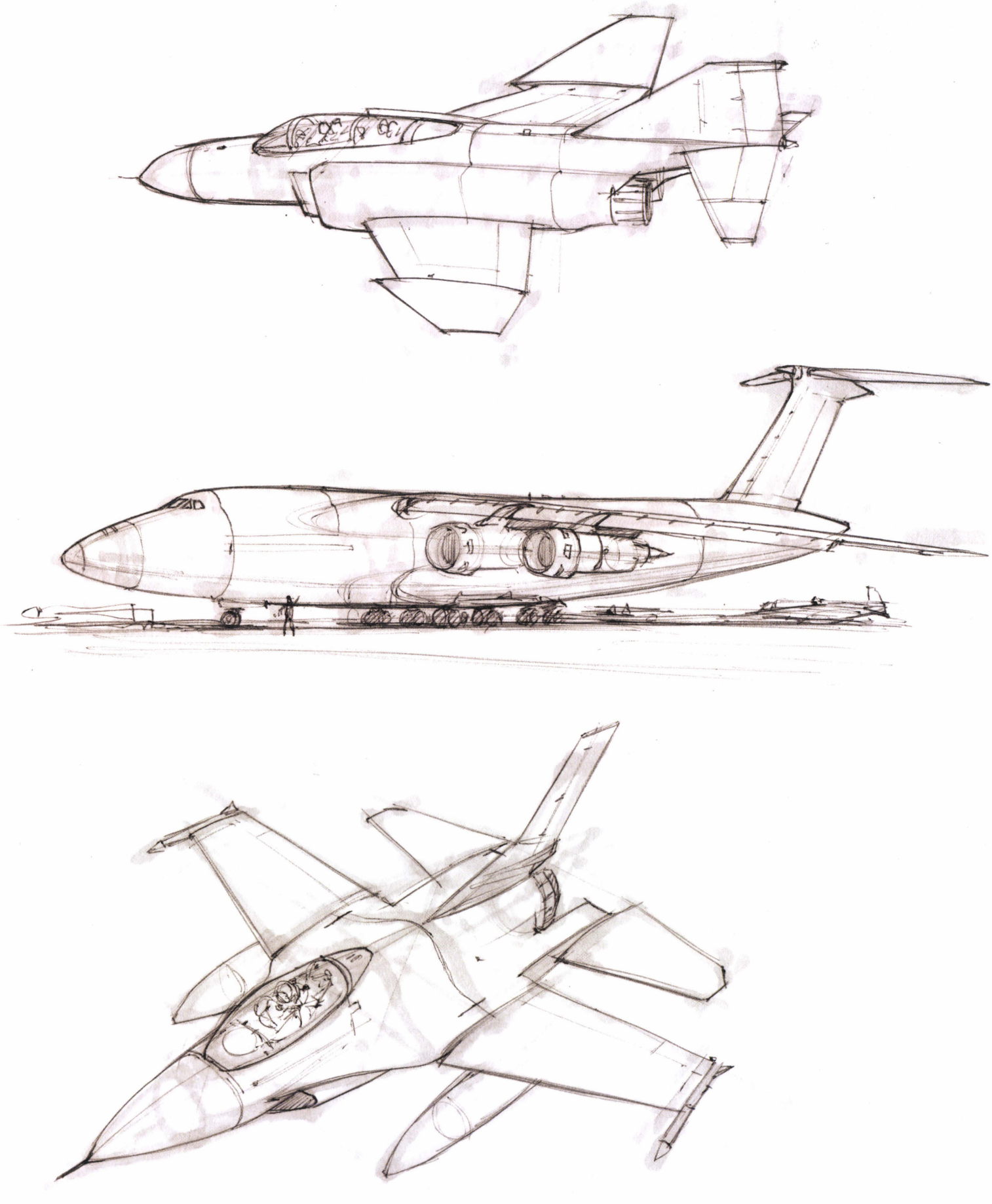

LOOSE CONCEPT SKETCHING

One way to start a loose concept sketch of something original is by using a light gray marker like a Copic 0 or 1 value. This type of under-drawing, done with a light value, allows for exploration of the overall proportions before committing to the darker lines.

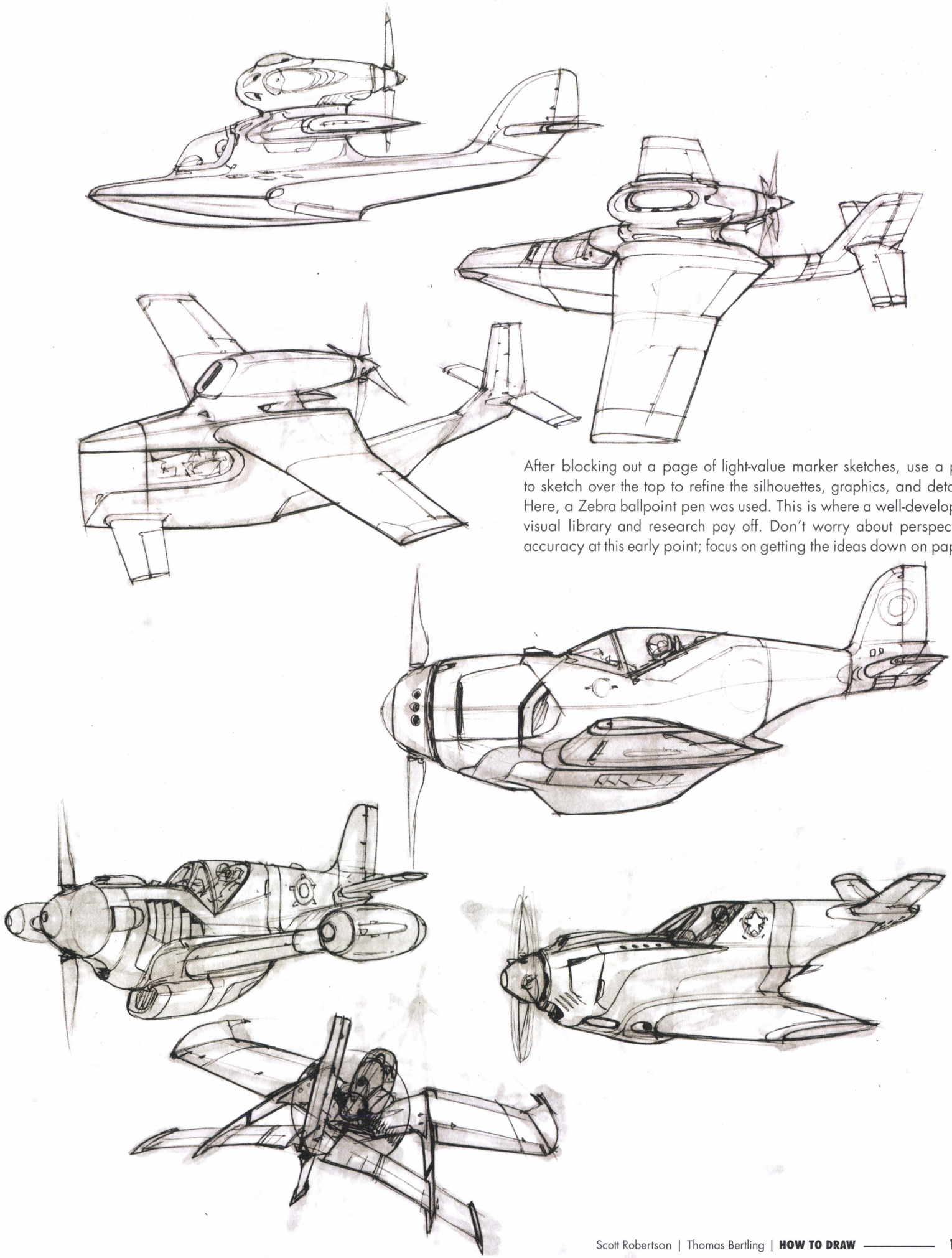

After blocking out a page of light-value marker sketches, use a pen to sketch over the top to refine the silhouettes, graphics, and details. Here, a Zebra ballpoint pen was used. This is where a well-developed visual library and research pay off. Don't worry about perspective accuracy at this early point; focus on getting the ideas down on paper.

"PAPER PLANE" IDEATION

When doing early, loose sketches focus more on *what* you are drawing than on *how* you are drawing it. In other words, use the drawings to help visualize and develop your design; don't get caught up trying to do a perfect perspective drawing at this point. Any loose perspective can be improved later once you have a design direction to pursue. What matters most at this early stage is finding a design you like enough that you are willing to put in the effort to draw it again and again, with more precision, from multiple views, and through various camera lenses.

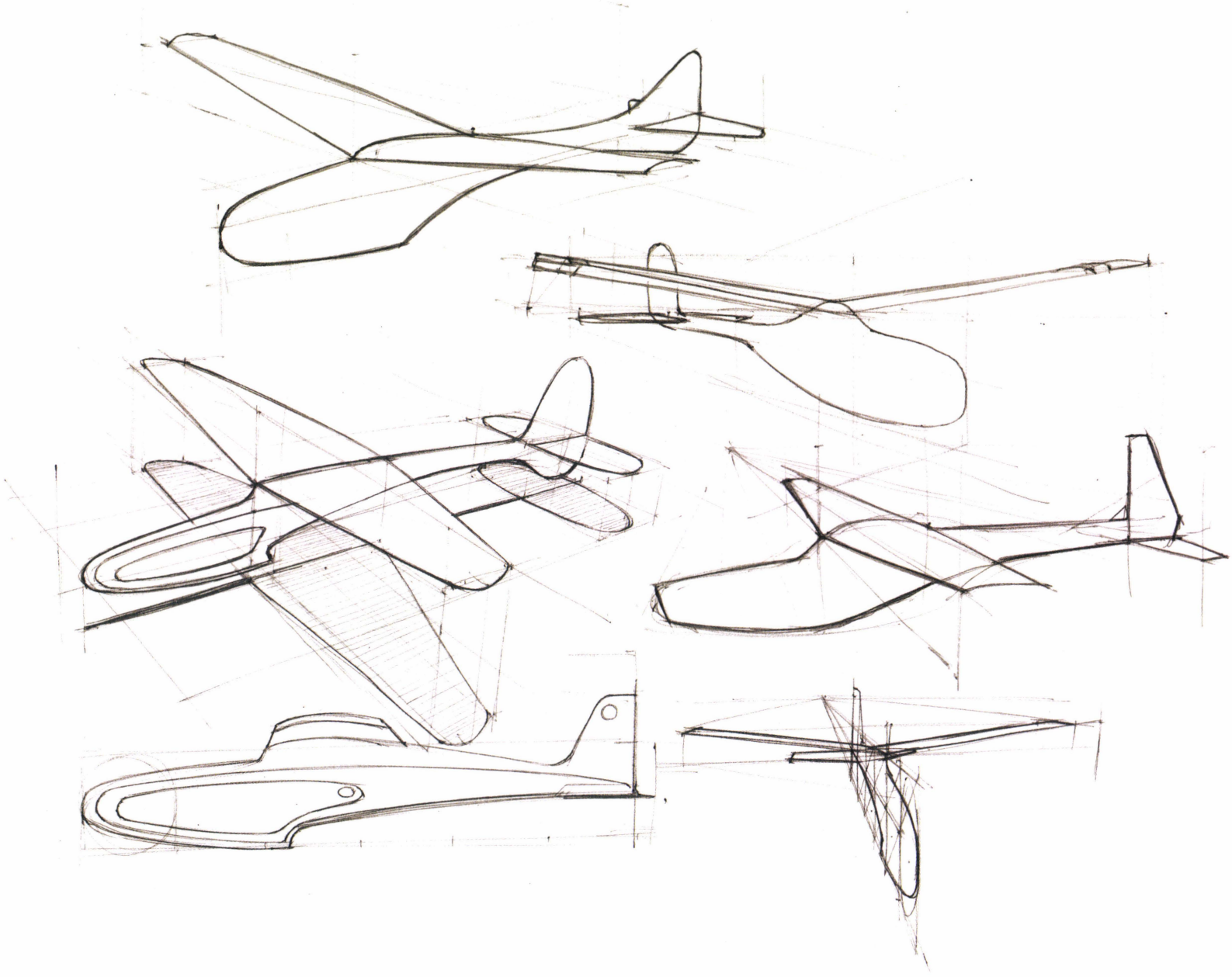

"PAPER PLANE" PERSPECTIVE GRID

To draw a paper airplane from your imagination, with perspective accuracy, the first thing you will need is a good perspective grid. The following steps build on the techniques described at the beginning of the book, but in this case will be used to draw something more specific. This is a step-by-step demo of how to draw a paper airplane from a side-view drawing in 2-point perspective.

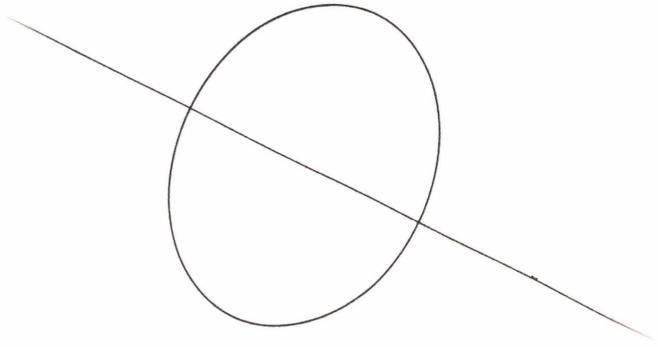

1. Start by using an ellipse guide to help establish the view of the object in perspective. Use an accurately drawn ellipse to generate a square in perspective. Draw an ellipse of any degree and its minor axis, as shown. Try to visualize this ellipse as being on the side of the fuselage of the plane. The minor axis is defining the Left Vanishing Point (LVP) in this case. To replicate this demo, use a 50° ellipse guide.

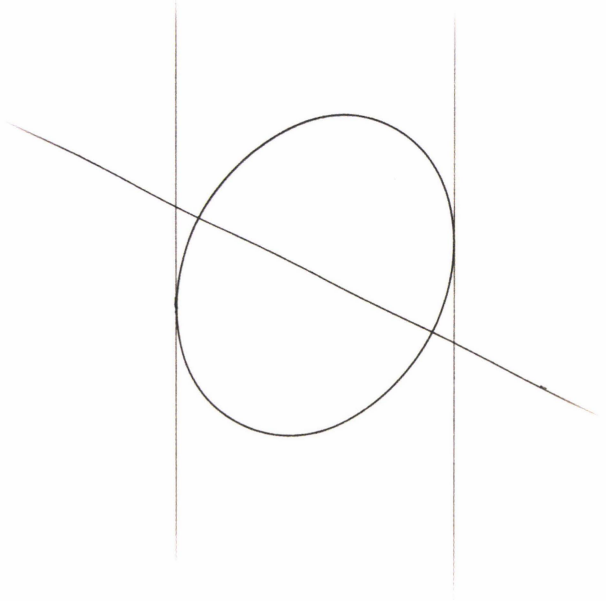

2. Because this is 2-point perspective, draw two parallel vertical lines tangent to the ellipse.

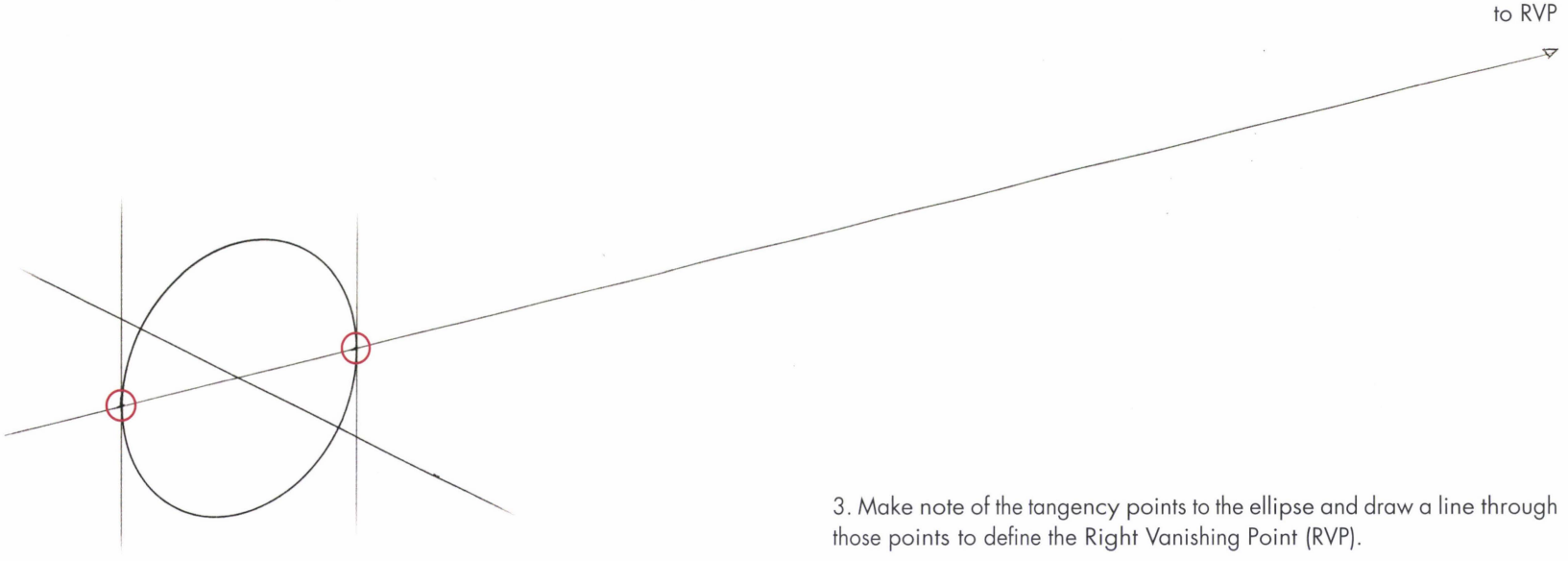

3. Make note of the tangency points to the ellipse and draw a line through those points to define the Right Vanishing Point (RVP).

4. Set the convergence of the perspective lines going to the RVP by drawing a line tangent to the bottom of the ellipse, converging with the first line drawn to the RVP. When drawing this line, think about the type of camera lens to use. For a wide-angle lens, faster convergence is needed; for a long lens, slower convergence is needed. As soon as these additional lines are drawn to the RVP, the Cone of Vision (camera lens) is set. Draw a line that is 90° to the first RVP guideline. Add a point at B that is equal to the distance between lines 0 and 1. Now draw a line tangent to the top of the ellipse and through point B. These three lines now all converge to the RVP, which is off of the page in the distance.

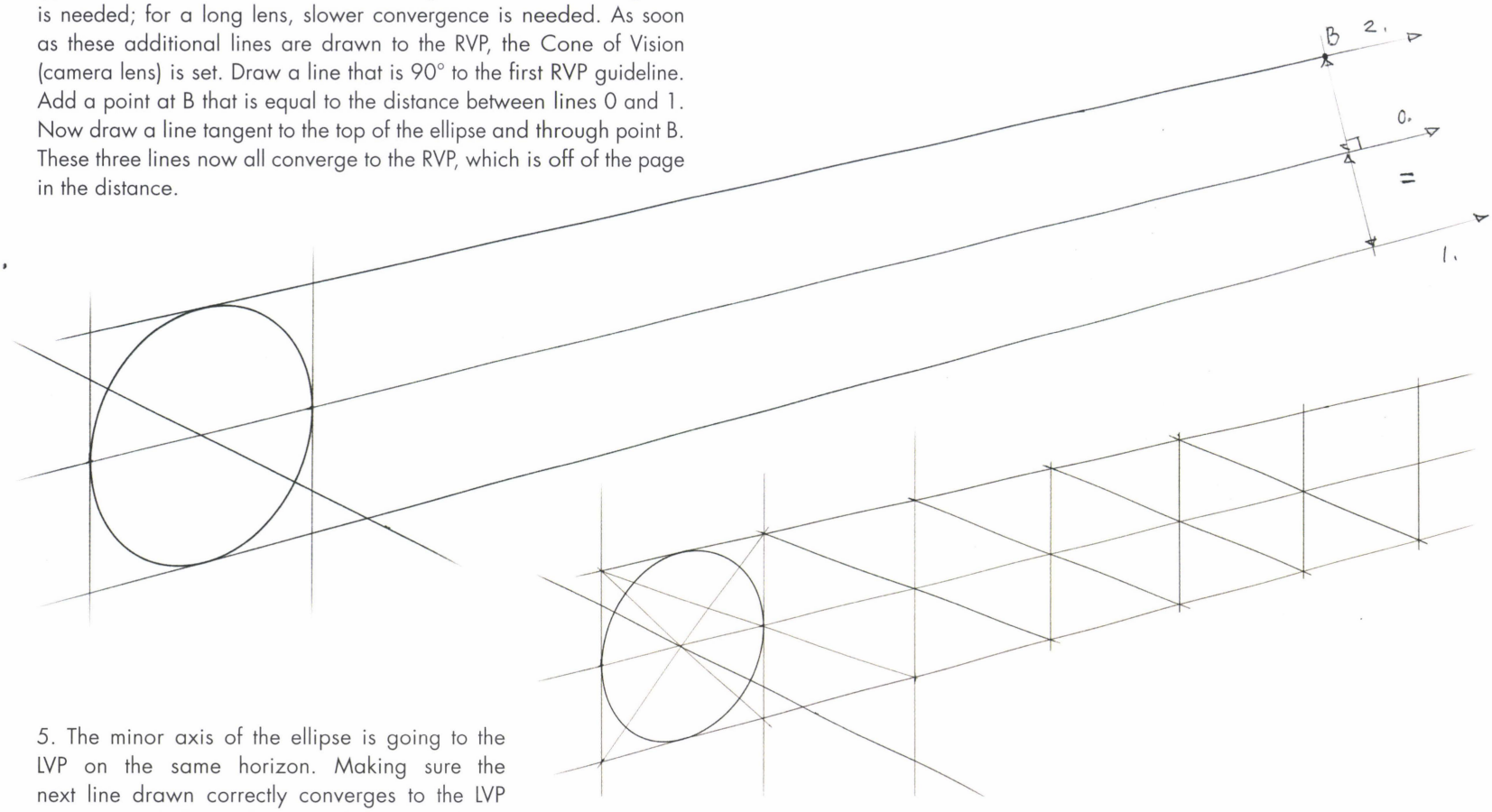

5. The minor axis of the ellipse is going to the LVP on the same horizon. Making sure the next line drawn correctly converges to the LVP presents a challenge because the LVP is off the paper. Employ the Brewer Method to define the proper convergence. Start by adding several foreshortened squares to the vertical plane.

6. To create a construction plane that is perpendicular to the Line of Sight, draw a line 90° to the last vertical line at the far right. Start the line at the lower-right corner of the last foreshortened square. Extend this new horizontal line to the left until it intersects the minor axis of the ellipse. Then add a new vertical line where the minor axis intersects with the baseline of the second square from the left.

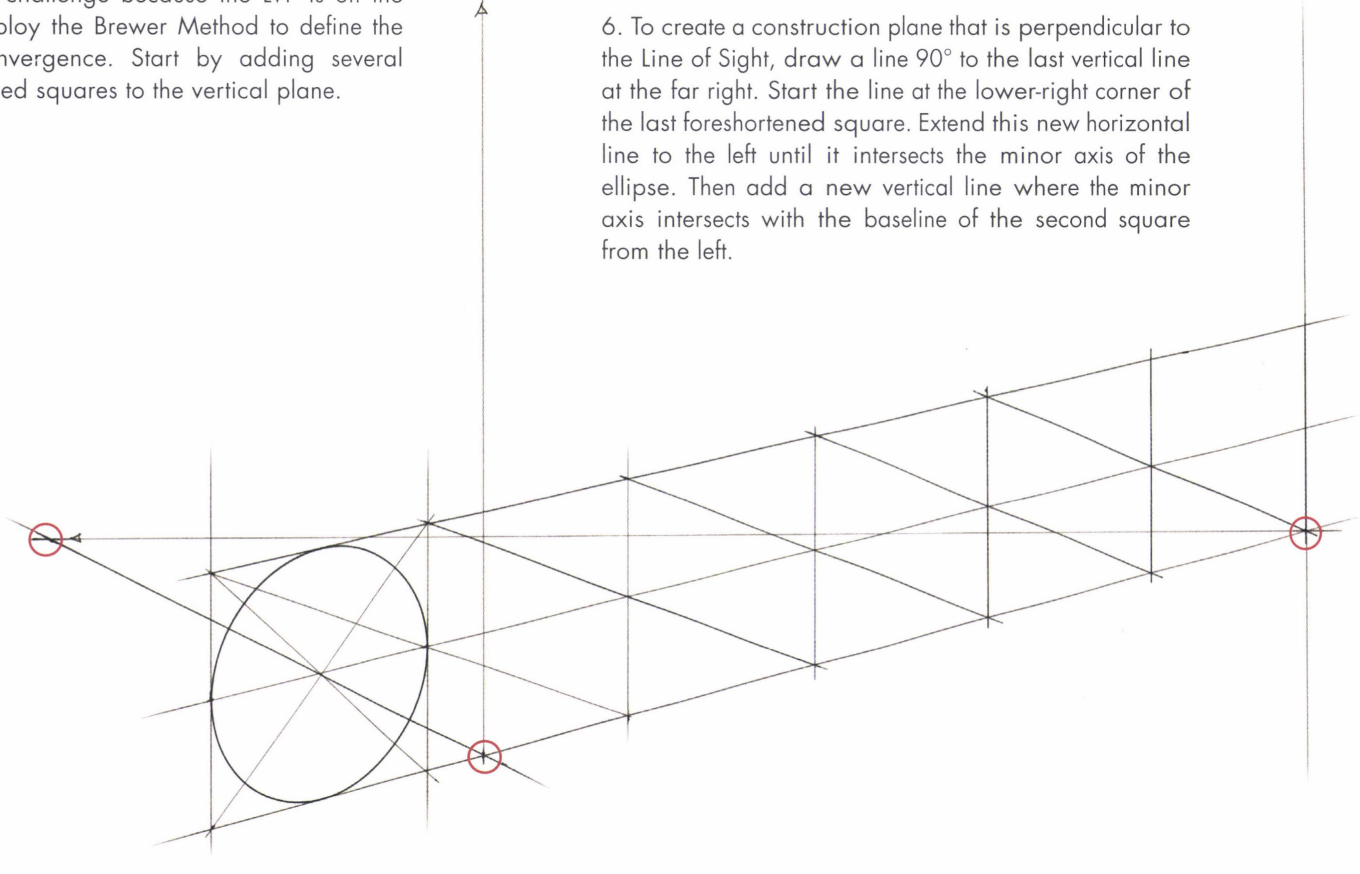

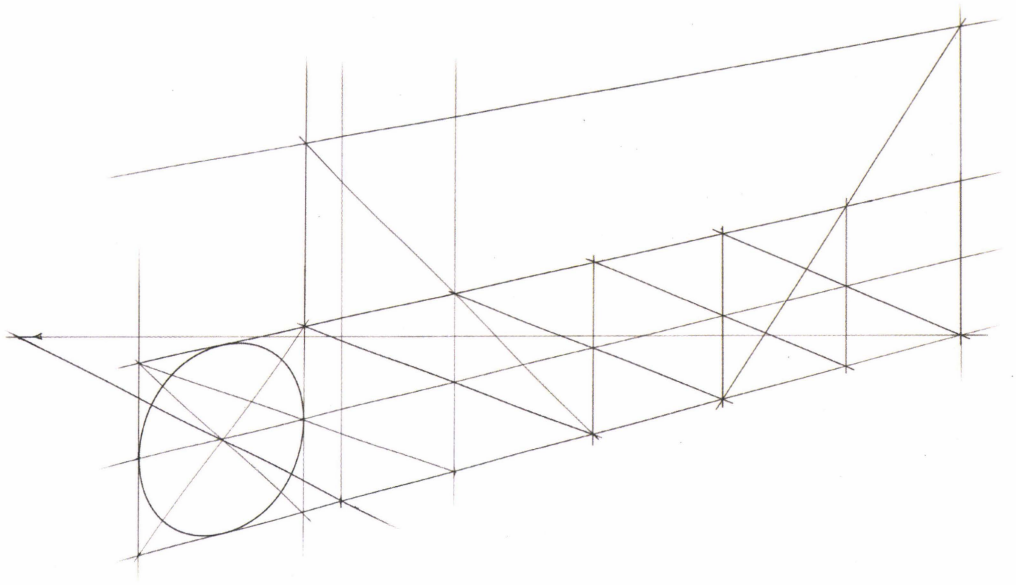

7. Double the height of the second and the last foreshortened squares using the auto-foreshortening construction method. Add a new line defining the tops of these new squares; this line will automatically point to the RVP. This increases the height of the RVP-grid, which will make the next step of the construction—finding additional properly converging guidelines going to the LVP—much more accurate.

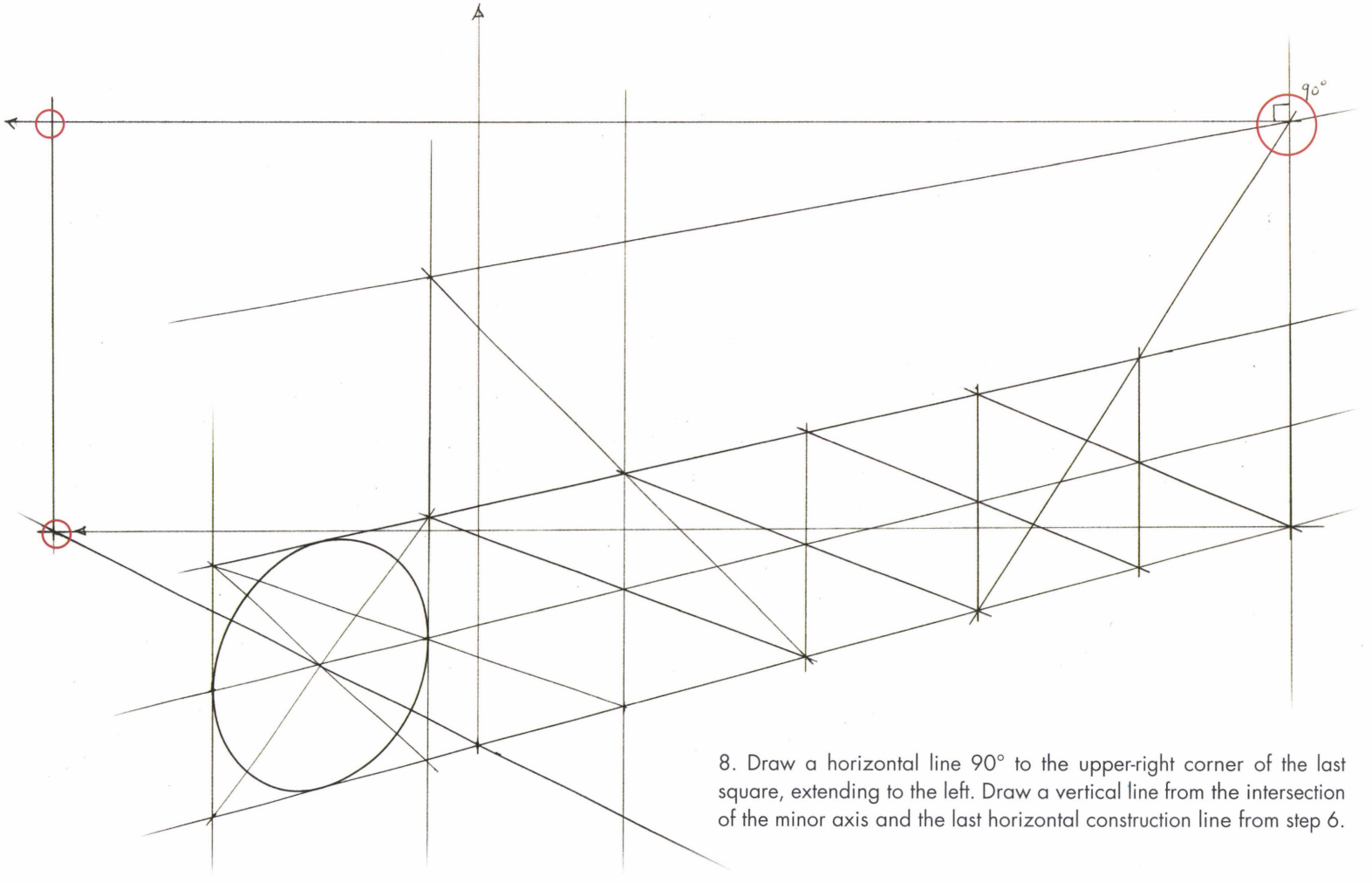

8. Draw a horizontal line 90° to the upper-right corner of the last square, extending to the left. Draw a vertical line from the intersection of the minor axis and the last horizontal construction line from step 6.

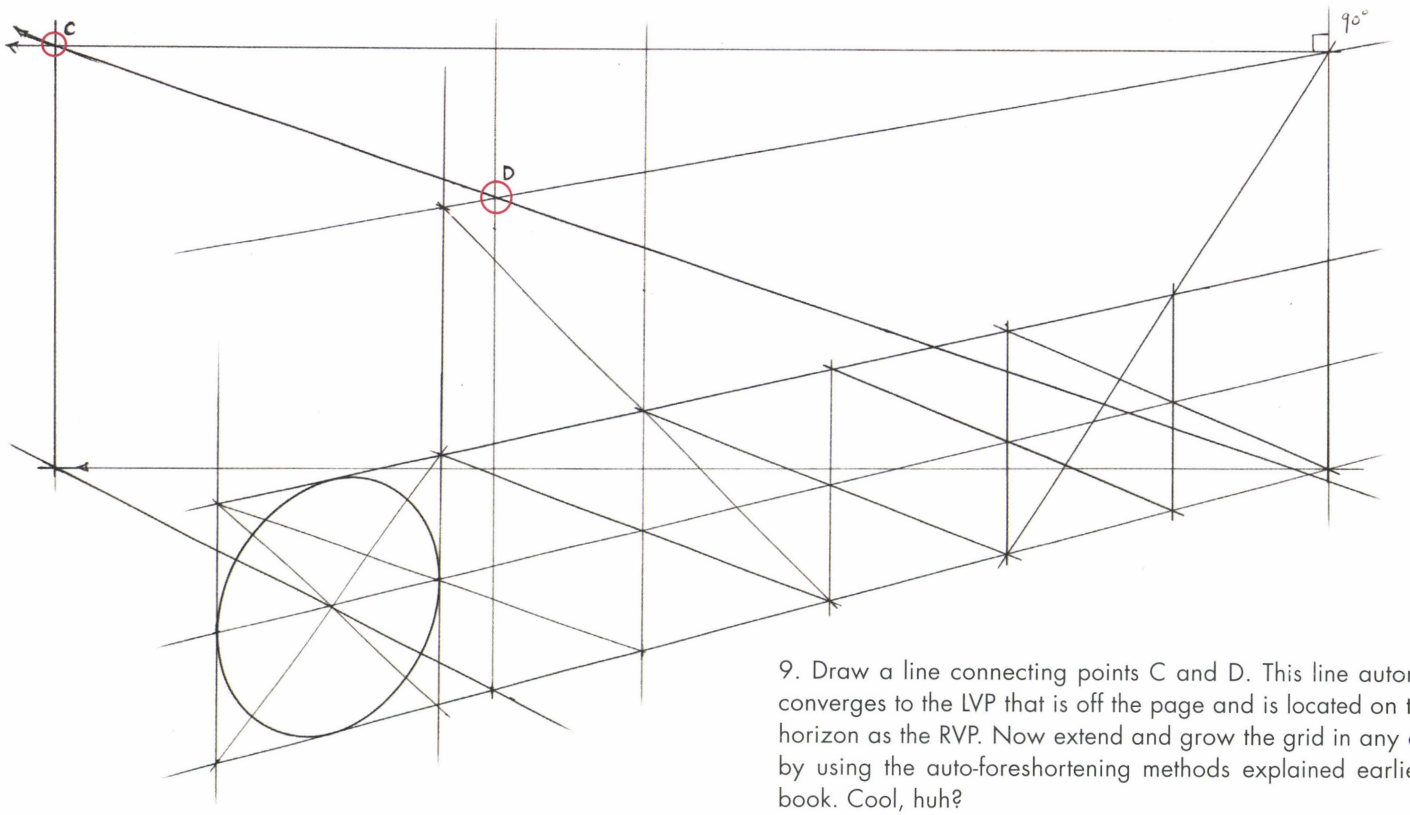

9. Draw a line connecting points C and D. This line automatically converges to the LVP that is off the page and is located on the same horizon as the RVP. Now extend and grow the grid in any direction by using the auto-foreshortening methods explained earlier in the book. Cool, huh?

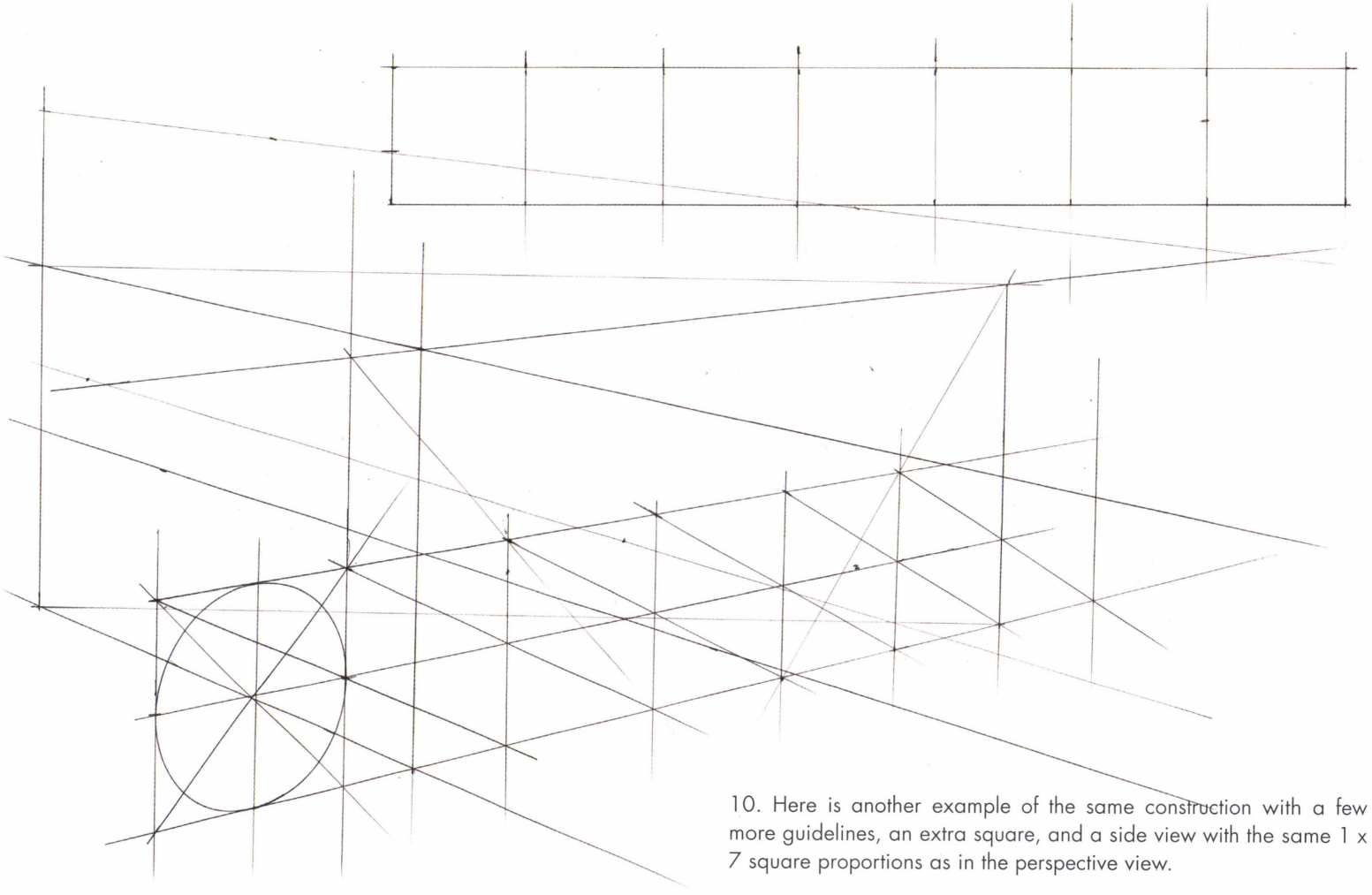

10. Here is another example of the same construction with a few more guidelines, an extra square, and a side view with the same 1 x 7 square proportions as in the perspective view.

DRAWING A PAPER PLANE, STEP-BY-STEP

This demo was done on a Borden & Riley 100s smooth cotton comp marker paper pad. It is drawn entirely freehand with a ballpoint pen. You can make a copy of the grid from the previous page to use as an underlay.

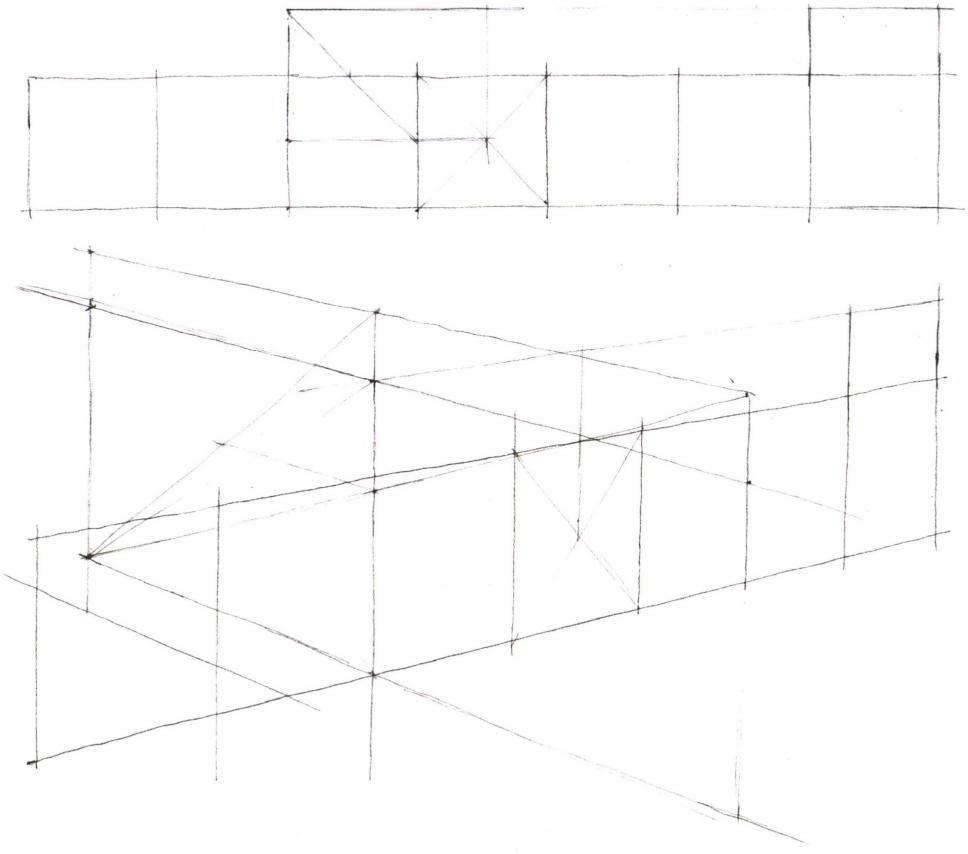

1. Start by transferring the guidelines to an overlay page. Freehand tracing over the guidelines is good practice, but using a straightedge is probably faster and more accurate. Trace over the basic planes and use the auto-foreshortening construction method to locate the front corners of the wing location based on the side view. The width of the wings is just a guess at whatever feels right. Since this is the first time it is being added, it cannot be wrong.

2. Sketch a side view of the plane. Remember there is no perspective in this view; this is just an orthographic view. This design will have a dihedral angle built into the wing. This means that the wing tips are higher than the center of the wing where it connects to the fuselage. In top view, the wings taper from the center to the wing tips. In the side view this is visible as well.

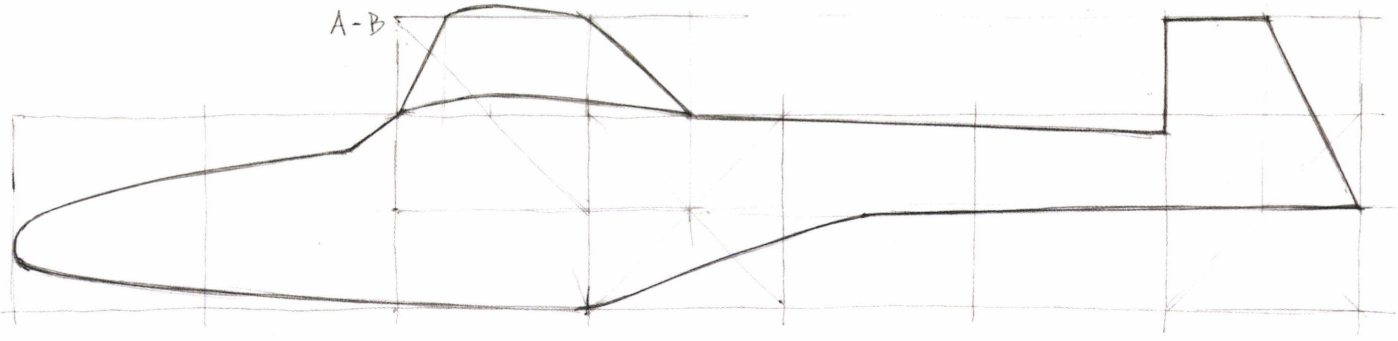

3. Anything that can be drawn in an orthographic view can be plotted in a perspective view once there is a properly foreshortened and proportioned construction plane to draw on. Just draw the same side-view sketch on the side-view perspective plane. Use the foreshortened squares as reference lines to help in plotting the points needed to draw the side view in perspective. Use the guidelines and divide the squares where needed to locate more reference points. Look for alignments between the sketch in the side view and the existing guidelines that are common in both views. Try extending the shorter lines to see where they intersect the 1 x 7 construction plane to help visualize where they go in perspective. In the side view, the short angled line dropping from the front of the wing was extended to see where it hit the bottom line of the squares' plane. It helps a little, but it would have been more helpful if it had landed right on the intersection of the bottom line and the vertical line dividing squares 1 and 2. No "happy accidents" this time.

If you reference where the side view is in relation to the 1 x 7 construction plane, transferring the side view will be pretty straightforward. If you have practiced drawing smooth lines through fixed points, it will really pay off here with a good-looking drawing in perspective. The tail of the plane in perspective is intentionally lighter, as the wing might cross over it at some point.

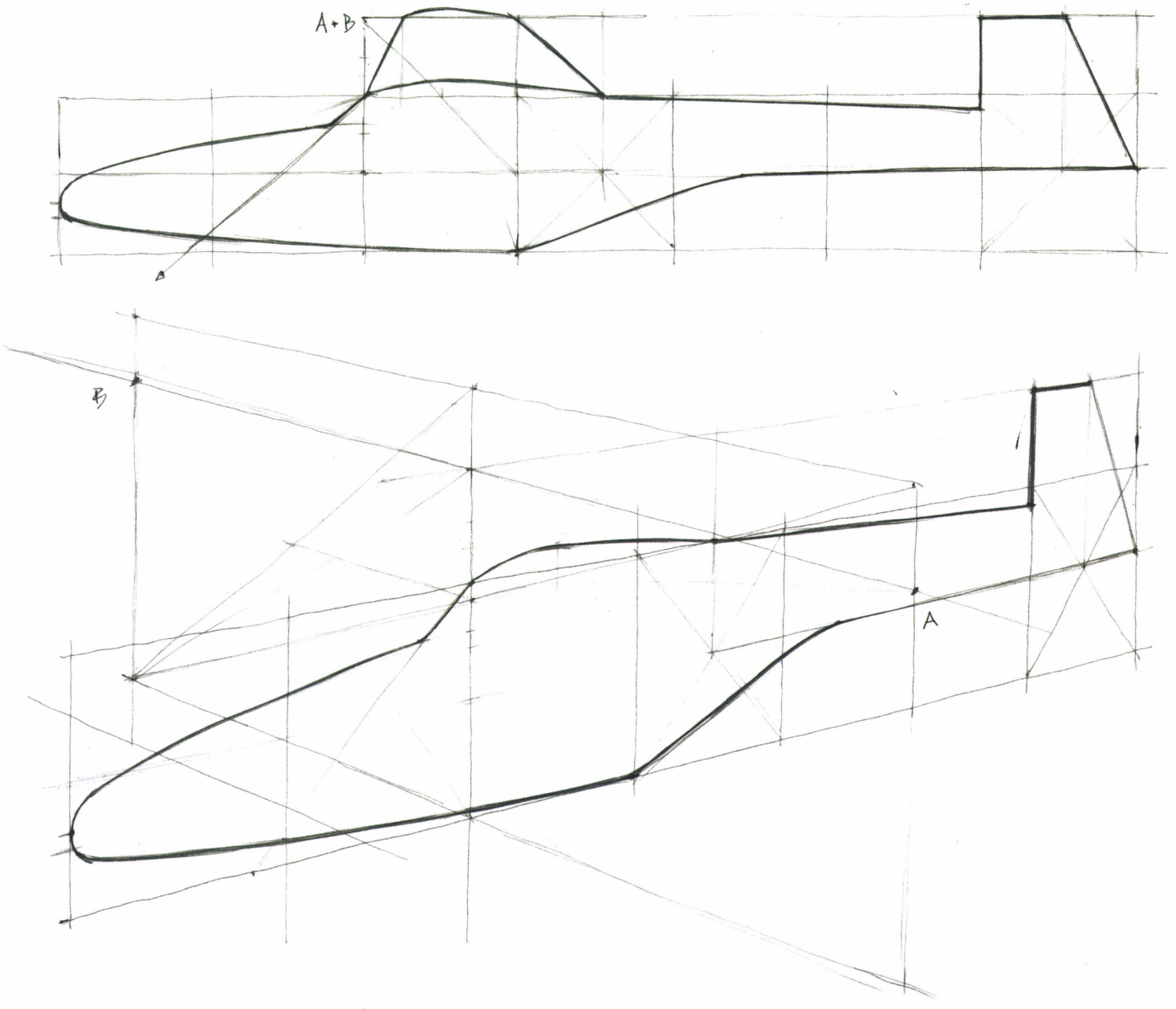

4. The wing starts at the top of the fuselage, but you must figure out where the wing tips are located. Use the auto-foreshortening method to make a construction plane that cuts 90° across the fuselage at the front of the wing, defining the overall width between points A and B. These are the reference points in 3D space to start defining the wing tips. Referring back to the side view, see that the front of the wing tip is about one-quarter of a square back from the front of the wing at its center, and the back of the wing tip is located on the vertical line extending up between squares 3 and 4. There are two ways to transfer these points out to the wing-tip locations in top view. The first is to project the front and back of the wing tips down to the bottom horizontal guideline on the fuselage and then project them out to the top-view width of points A–B, or move these wing-tip points up to the height of A–B on the fuselage construction plane and then project them out to the top-view width of points A–B. If you decide to drop them down and then out, try dropping them to a new construction line going to the RVP located a bit below the fuselage. This can easily become the top view of the design on a ground plane, just like a cast shadow directly below the airplane. The method used here is the down-and-out method on a ground plane, located just below the fuselage.

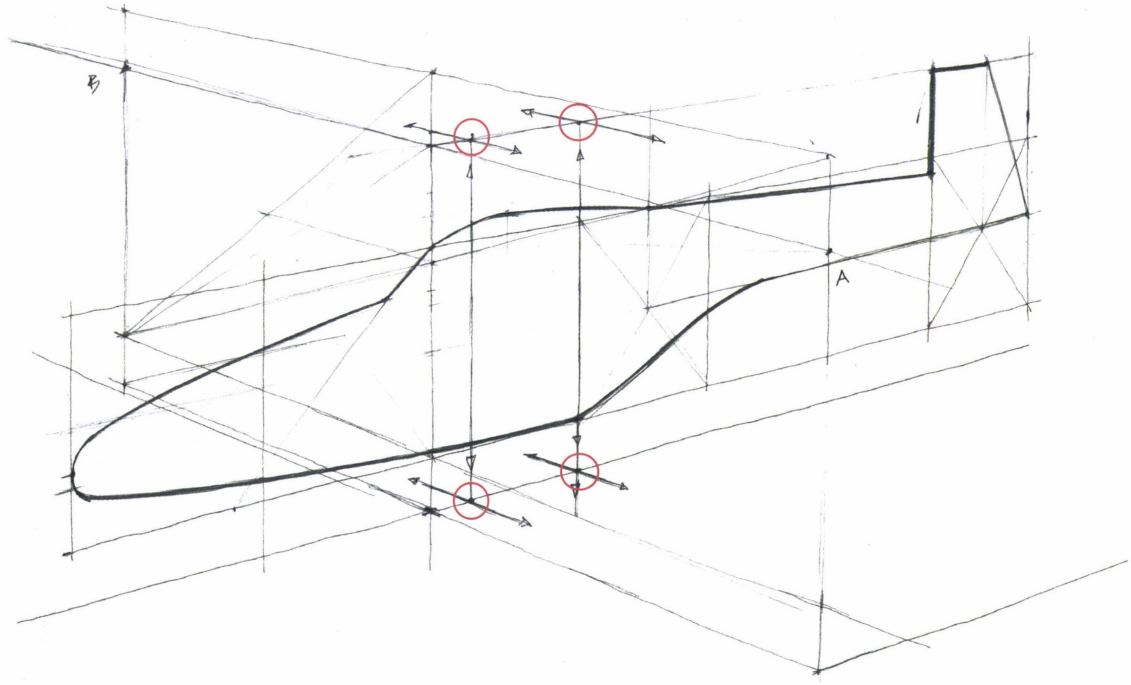

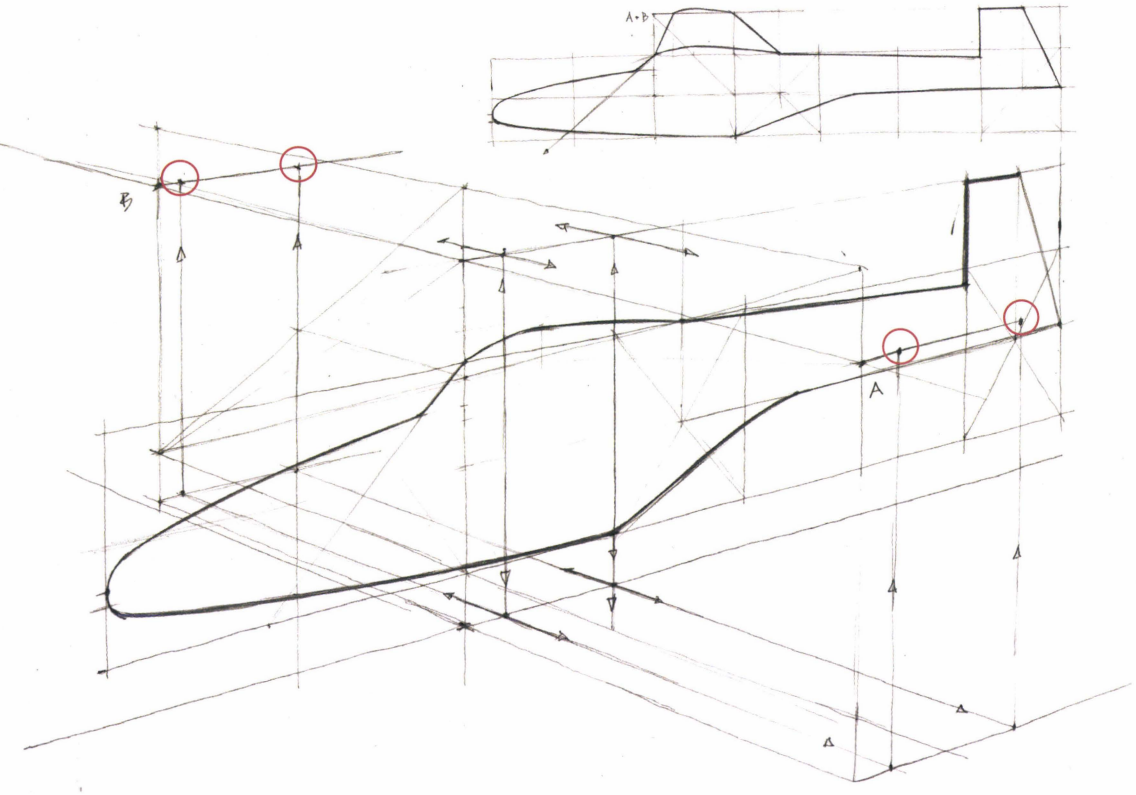

5. Transfer the front and back positions of the wing tips out until they intersect with the RVP guidelines on the new ground plane located directly below points A and B. Where these lines intersect, draw vertical construction lines to move the points up until they intersect the guidelines drawn to the RVP from points A and B. These new intersections, circled in red, are the front and back corner of each wing tip.

6. Next, draw the airfoil cross-section of each wing tip from point to point. Drop the location of the front and the back of the wing, where it attaches to the fuselage, down to the ground plane. Connect the points on the ground to create the top view/cast shadow. Finally, draw straight lines from the centerline at the front and back of the wing out to the wing-tip corners to create the main wing, as shown. Looking at the shadow on the ground plane, observe that this is what the top view of the design looks like in perspective, whereas the wing itself looks quite different because of the higher, raised position of the wing tips in relation to the center of the wing where it attaches to the fuselage.

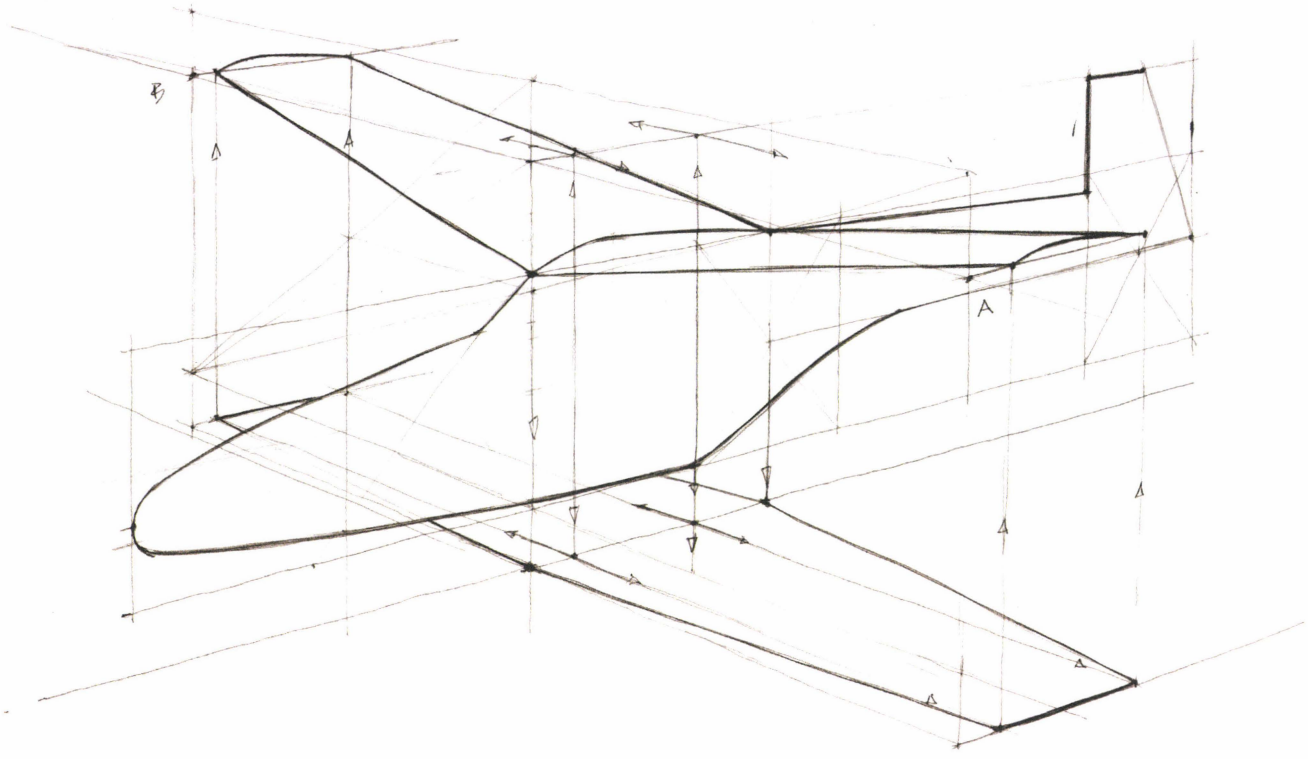

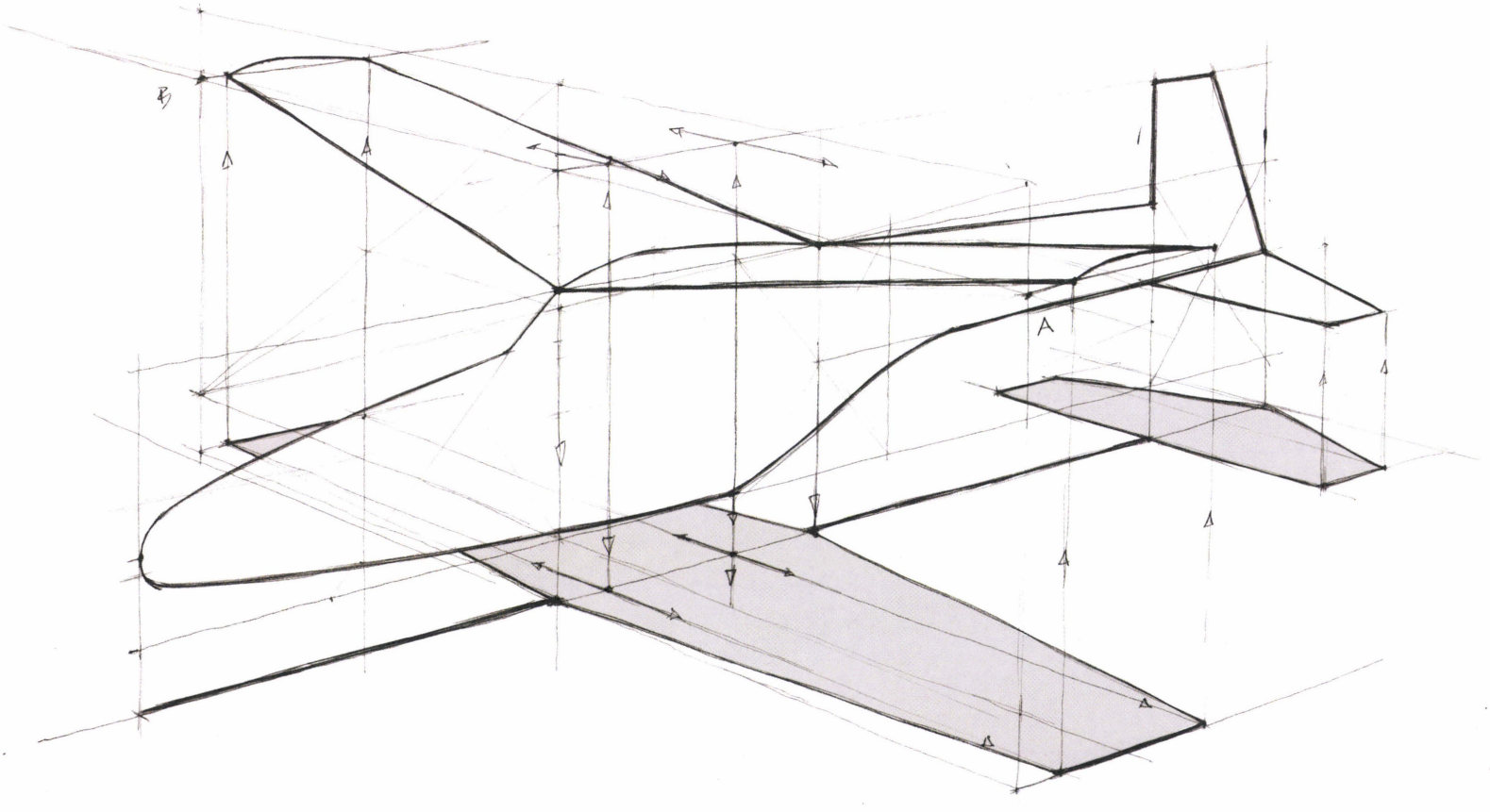

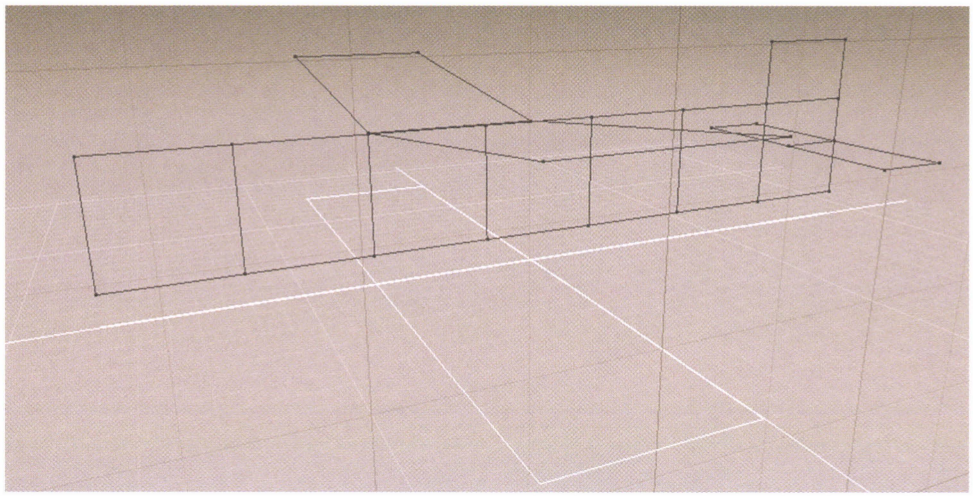

25mm lens

The three perspective grids on this page were created in the 3D modeling program MODO. The model is very simple but still provides a great way to quickly explore different perspective views of the plane. Different camera lenses can be tried to see what type of convergence is best for the underlay.

Through a 25mm lens, the "paper plane" underlay looks like it is either a small object very close, or that the object must be very large, as this is the only way this effect can normally be experienced with the naked eye.

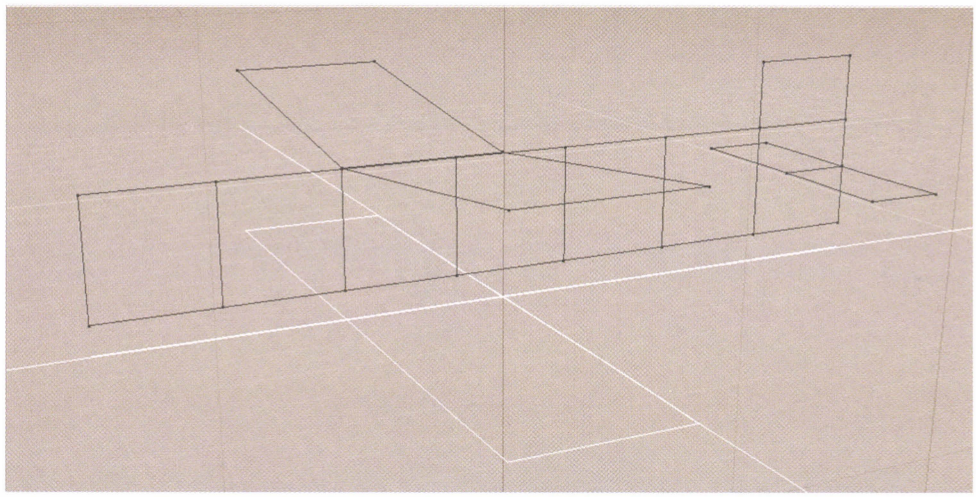

50mm lens

This is the same underlay model, now through a 50mm lens. Scenes or objects seen through a 50mm lens will feel the most "natural," since it is the closest to the human eye. Because this is the most natural-feeling perspective convergence, it is the one we default to when sketching freehand. If using an underlay with a wide-angle lens like the one above, or a longer lens like the one below, pay special attention to referencing the guidelines on these grids because the brain will always try to pull the perspective convergence back to a 50mm lens that "feels" more correct.

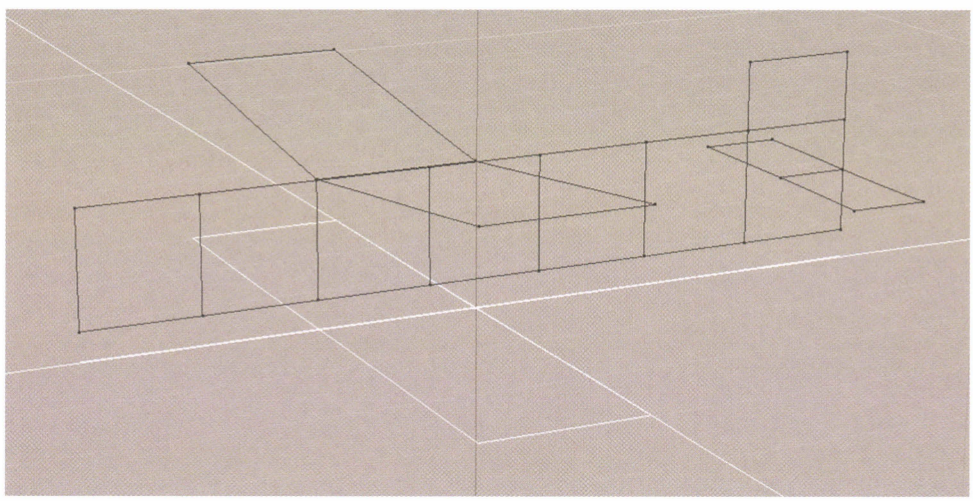

100mm lens

This longer-lens view seen through a 100mm lens is just as correct as the top two but it feels different. The brain wants to observe more perspective convergence than this lens provides, so this object feels far away due to the slower convergence. This is most commonly experienced when looking at photographs shot with a telephoto lens. The proportions of the plane are the same in each grid on this page; the only difference is the perspective convergence. Remember when sketching, any convergence can be "chosen," but when something other than a 50mm lens is used, a photographic lens effect must emulated.

USING A 3D UNDERLAY

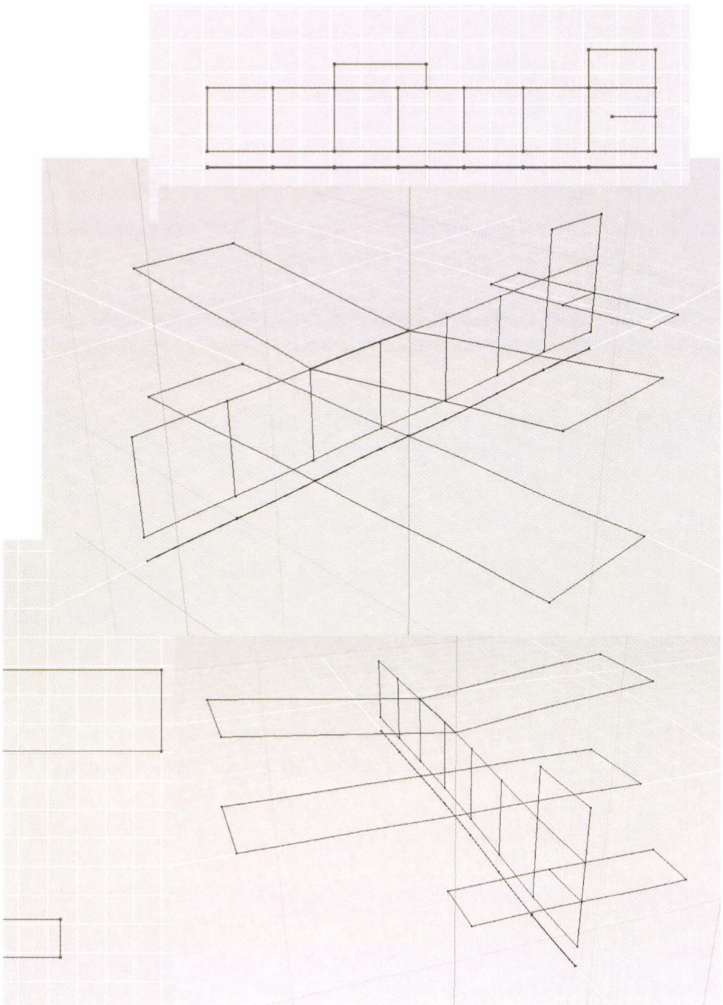

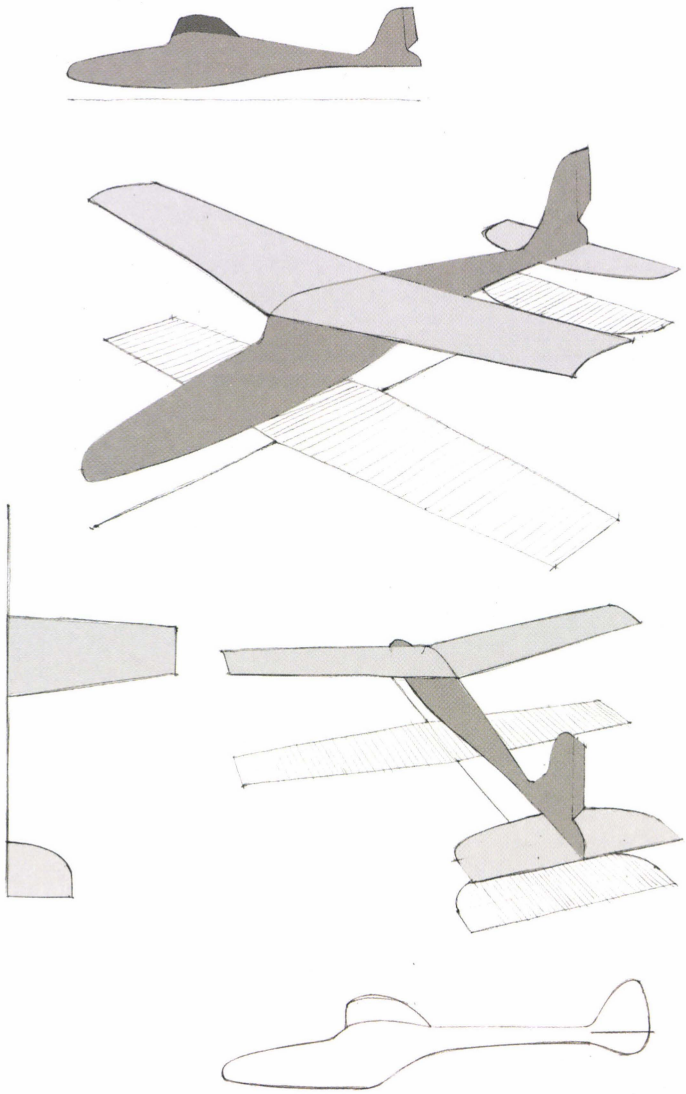

On this page and the next, the perspective grids above were used to speed up the drawing of each concept and to improve the accuracy of the perspective. The grids were made in MODO, where the basic proportions of the paper plane were established, and then several perspective views were screen-captured. When needing to generate a large of number of styling options for an object that has some hard points that are set and cannot move, like the position of the wings or the tail in this case, then working over a perspective-grid underlay can be very helpful. To recompose the page after the styling direction is drawn, use Photoshop with this 3D underlay technique. You can jump right in to thinking about the design instead of thinking about technical drawing first. Look at the paper-plane concepts to the right; the top one has a cast shadow drawn directly under the plane. The cast shadow is basically the top view of the design and provides the viewer with more information about the design. This is a very helpful thing to do.

Looking at the front-3/4 view on the facing page, imagine viewing it without the shadow on the ground and the other supporting views. It might be confusing as to exactly what the top view of the wings would look like. By adding the shadow, however, it becomes instantly clear that the wing tips are swept forward in top view.

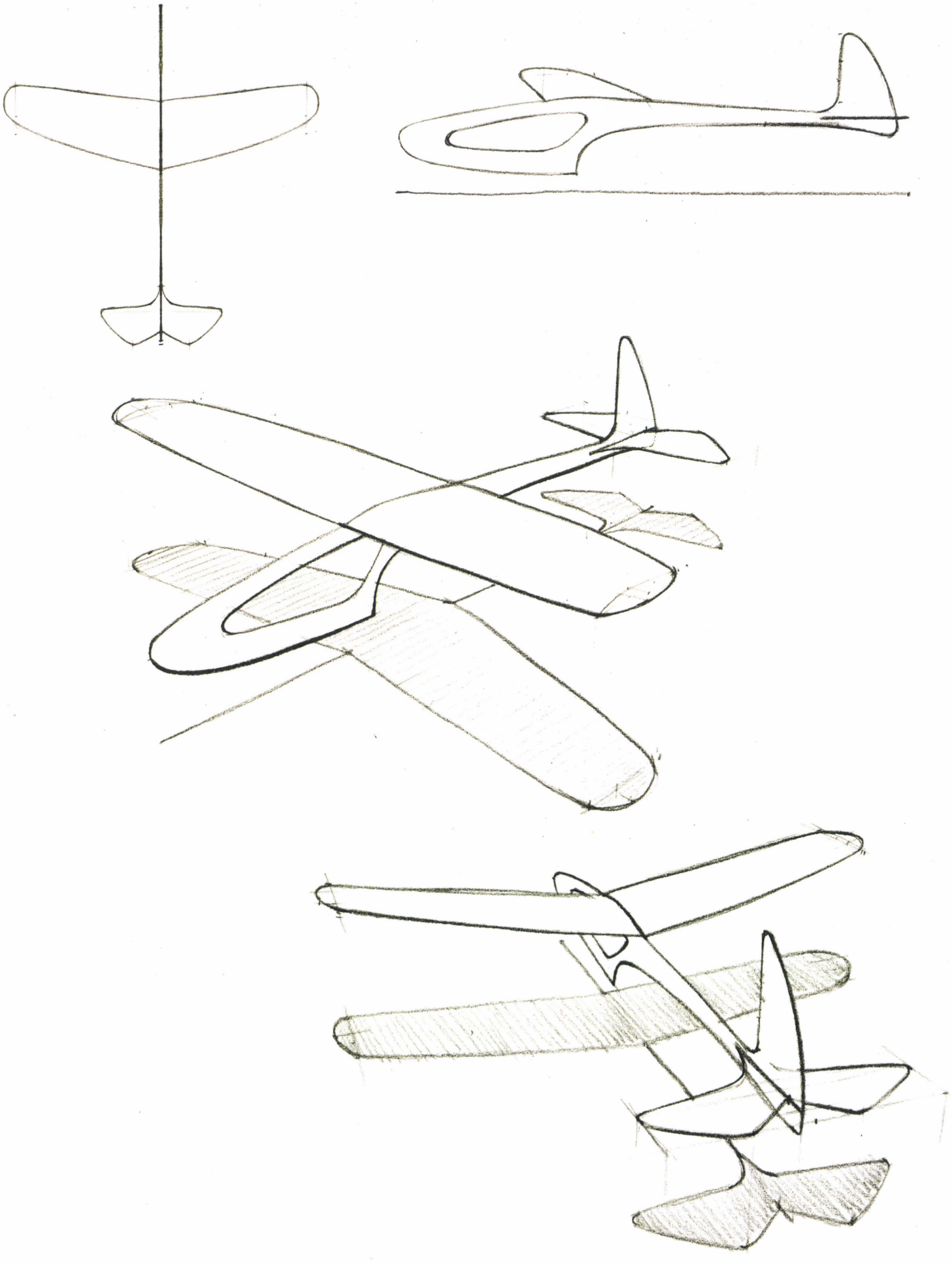

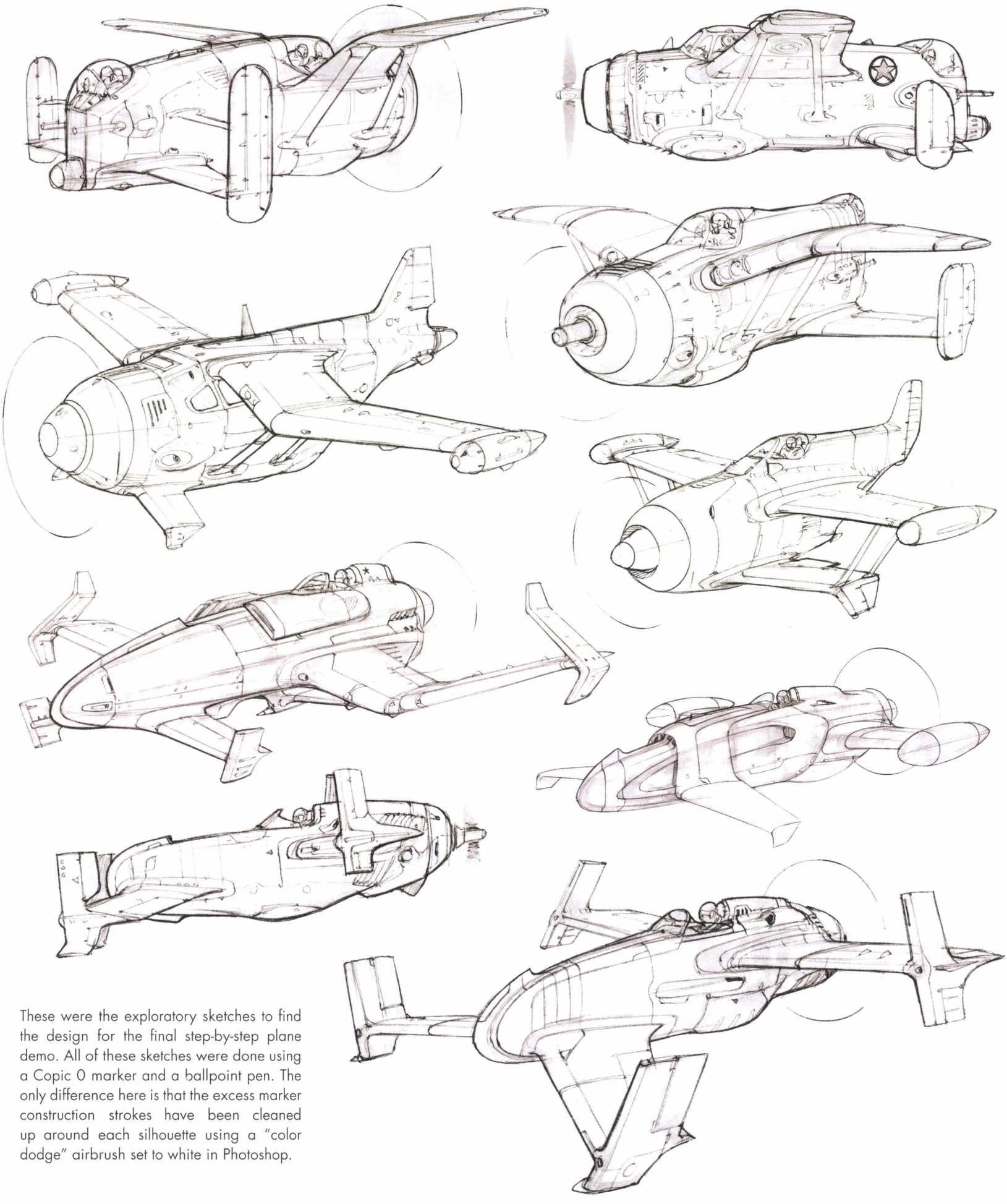

These were the exploratory sketches to find the design for the final step-by-step plane demo. All of these sketches were done using a Copic 0 marker and a ballpoint pen. The only difference here is that the excess marker construction strokes have been cleaned up around each silhouette using a "color dodge" airbrush set to white in Photoshop.

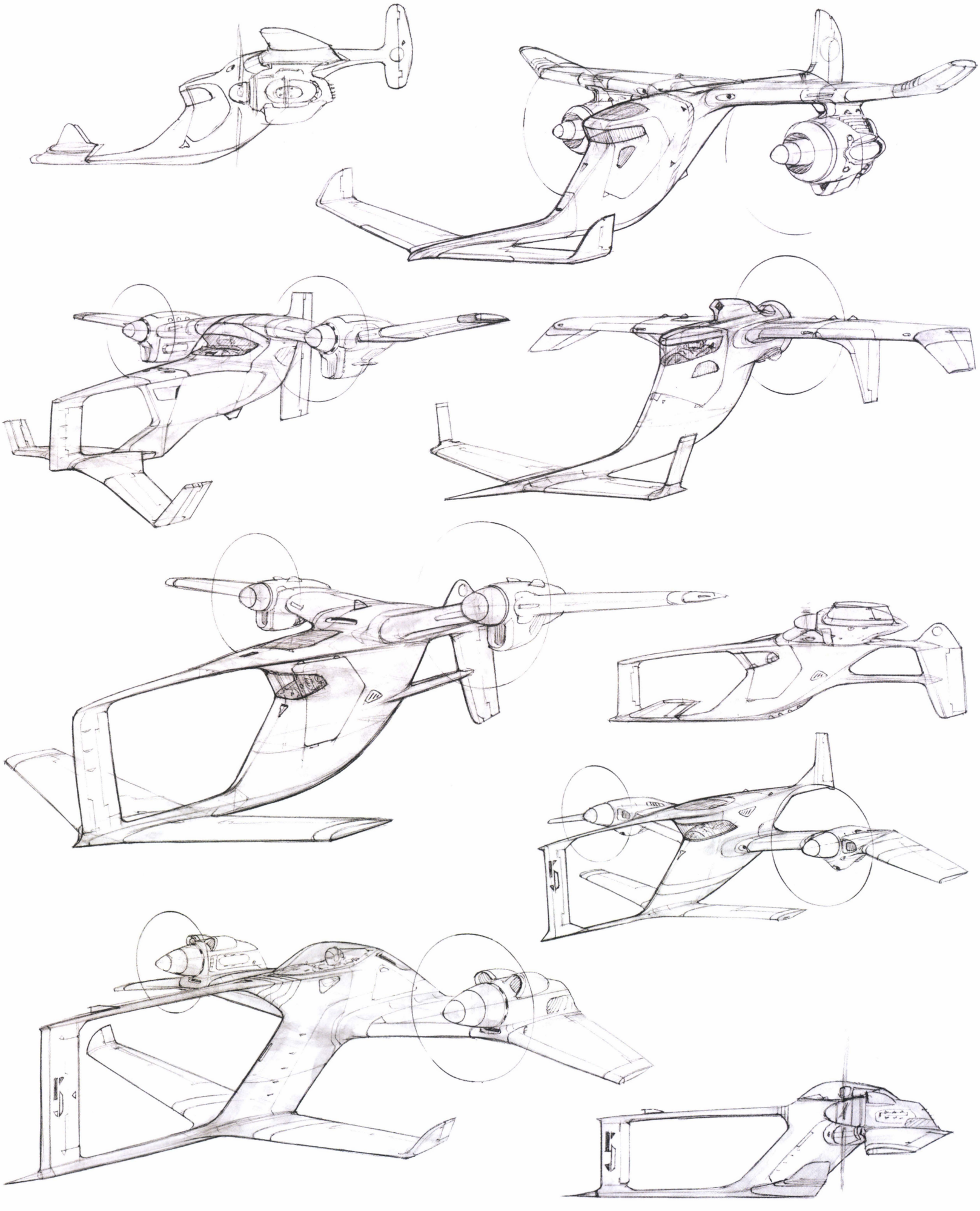

FINAL AIRPLANE DRAWING STEP-BY-STEP

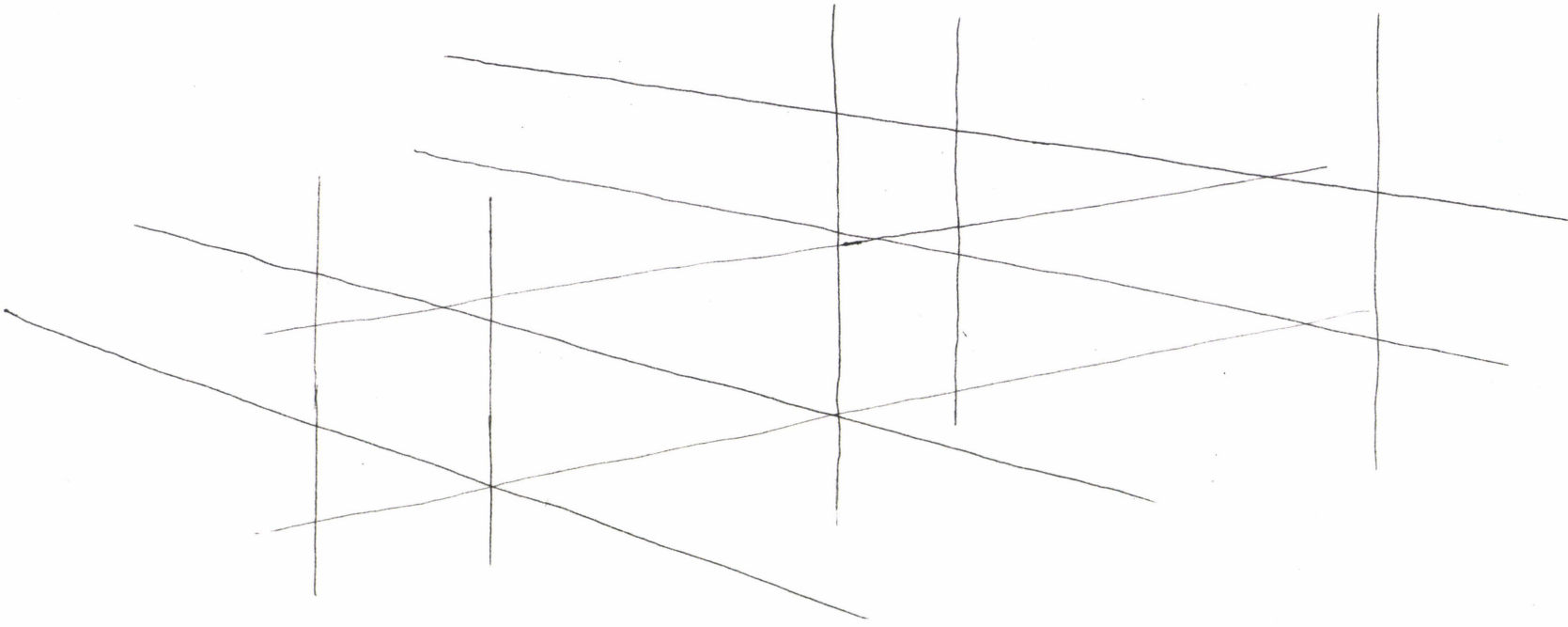

1. Now that some looser design sketches have been done, the next step is to refine the design to the next level. Start by imagining the view in which the airplane will be seen and construct an appropriate perspective grid. Use any of the techniques described earlier, either by hand or computer. Having an accurate grid will be essential.

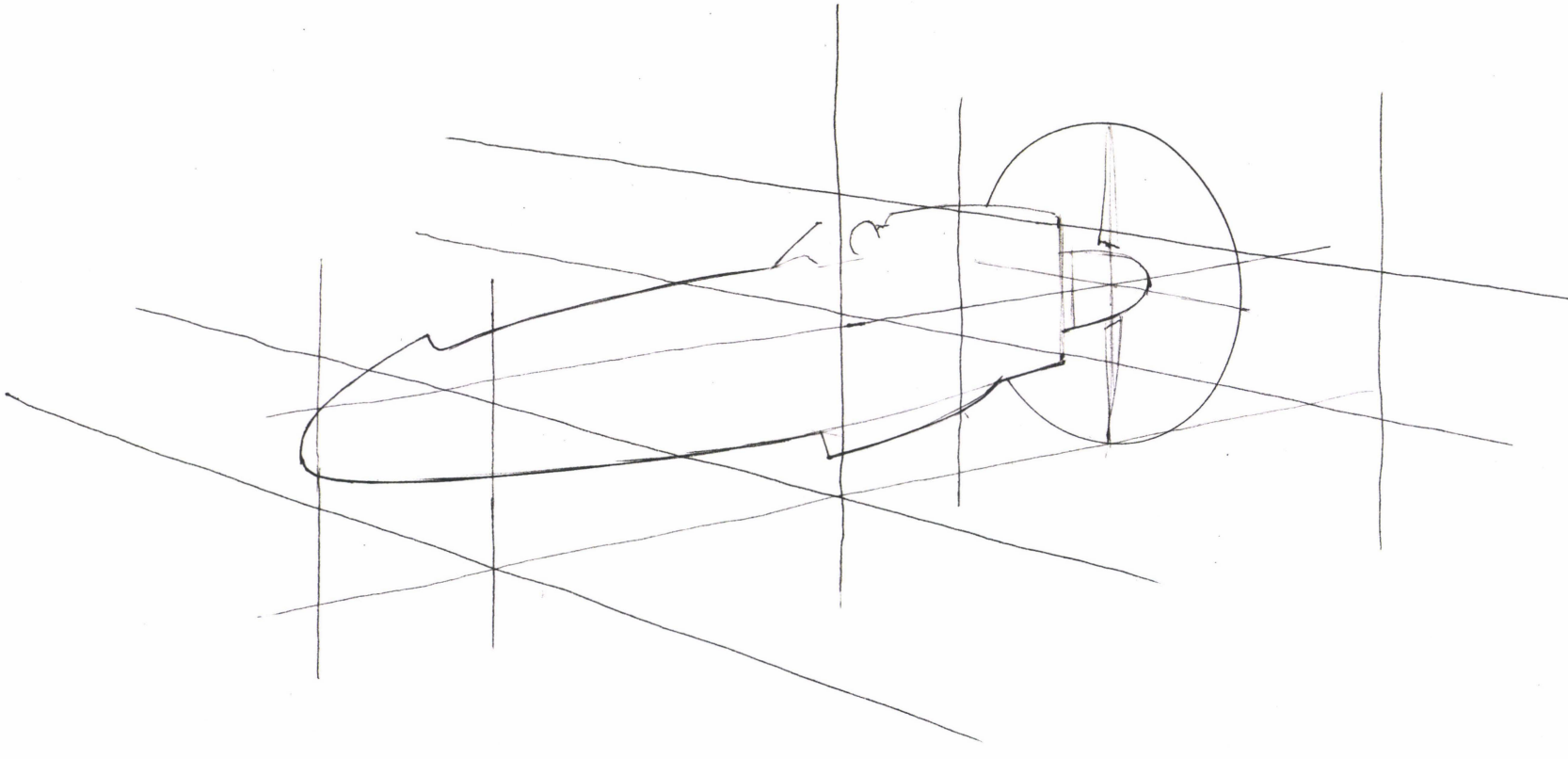

2. When drawing aircraft—or any vehicle—start with the centerline. The side view of a vehicle is one of the most important views, so getting the view properly foreshortened in perspective is a must. In the above sketch, the centerline of the aircraft has been drawn and a spinning propeller has been added. The construction plane of propeller is not on the centerline Y plane but is perpendicular to it. This is a very important spatial relationship to nail down correctly at this early point of the drawing.

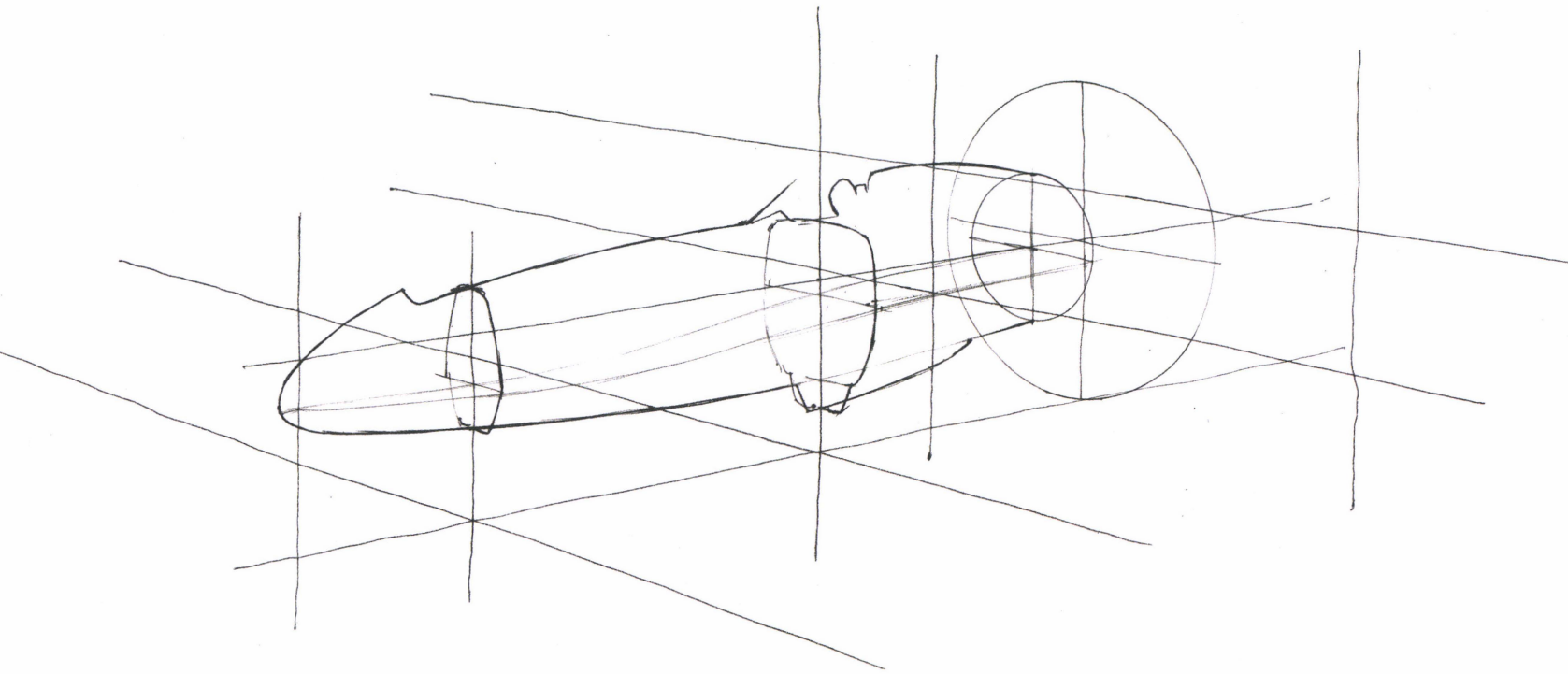

3. Remember that the key to drawing complex objects is to think about their key elements, one view or one section at a time. Add some X sections to the centerline. Here, there is a thin X section toward the front, another at the widest point of the fuselage, and a third one at the rear to represent the cylindrical form of the engine cowling. The widest part of this plane follows a curving side-view line that is drawn first on the centerline and then projected out to coincide with the width sections, just like in the X-Y-Z section drawing exercises in chapter 06 of this book.

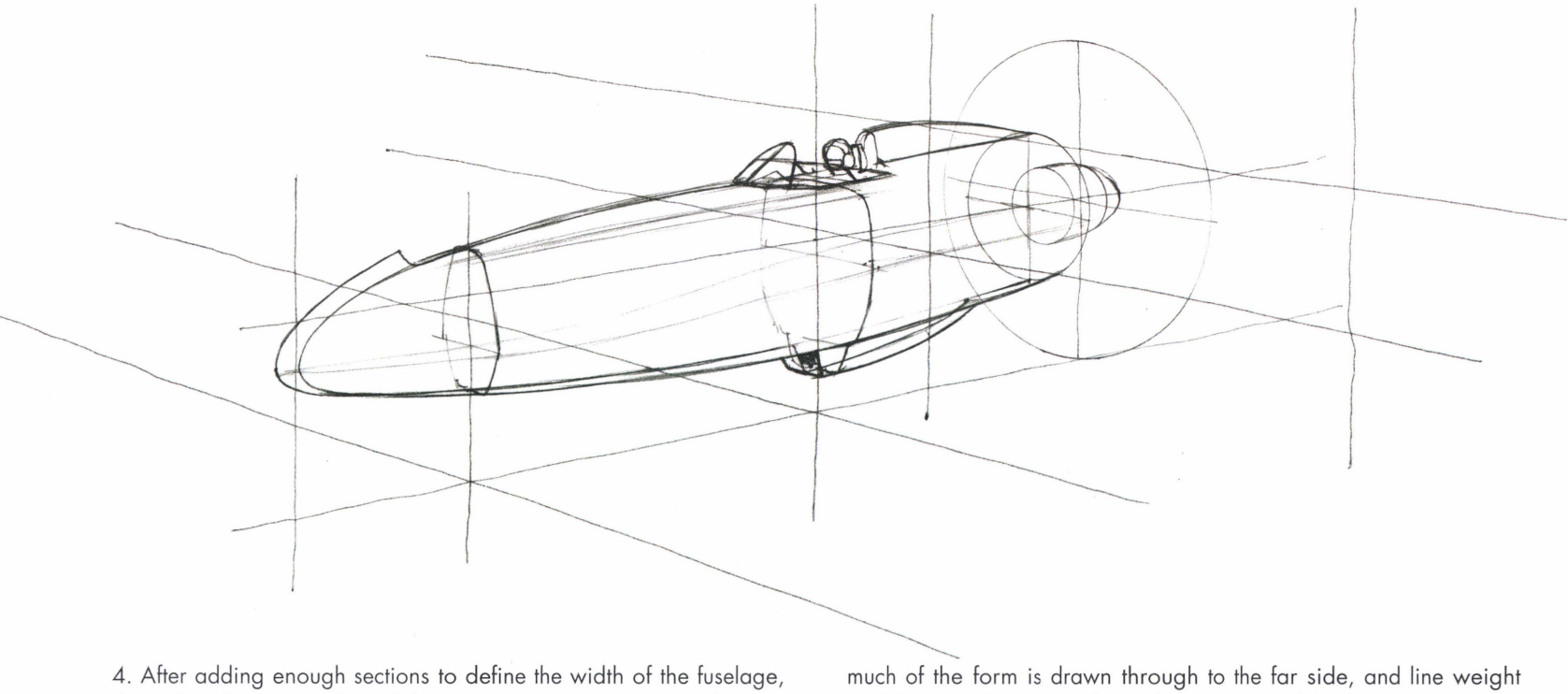

4. After adding enough sections to define the width of the fuselage, draw the silhouette with confidence. Again, it pays to take the time to draw a few simple sections first as opposed to guessing about the silhouette from the beginning. This type of drawing takes patience and is much more like building a model of the plane than quickly drawing its finished form. Also note that this is a working drawing, where much of the form is drawn through to the far side, and line weight and the visual appeal of the drawing are of less importance than making sure the object is properly built in perspective. This drawing will be made more visually appealing after it is fully constructed by doing an overlay on top of it where the focus can be on line weight and draftsmanship.

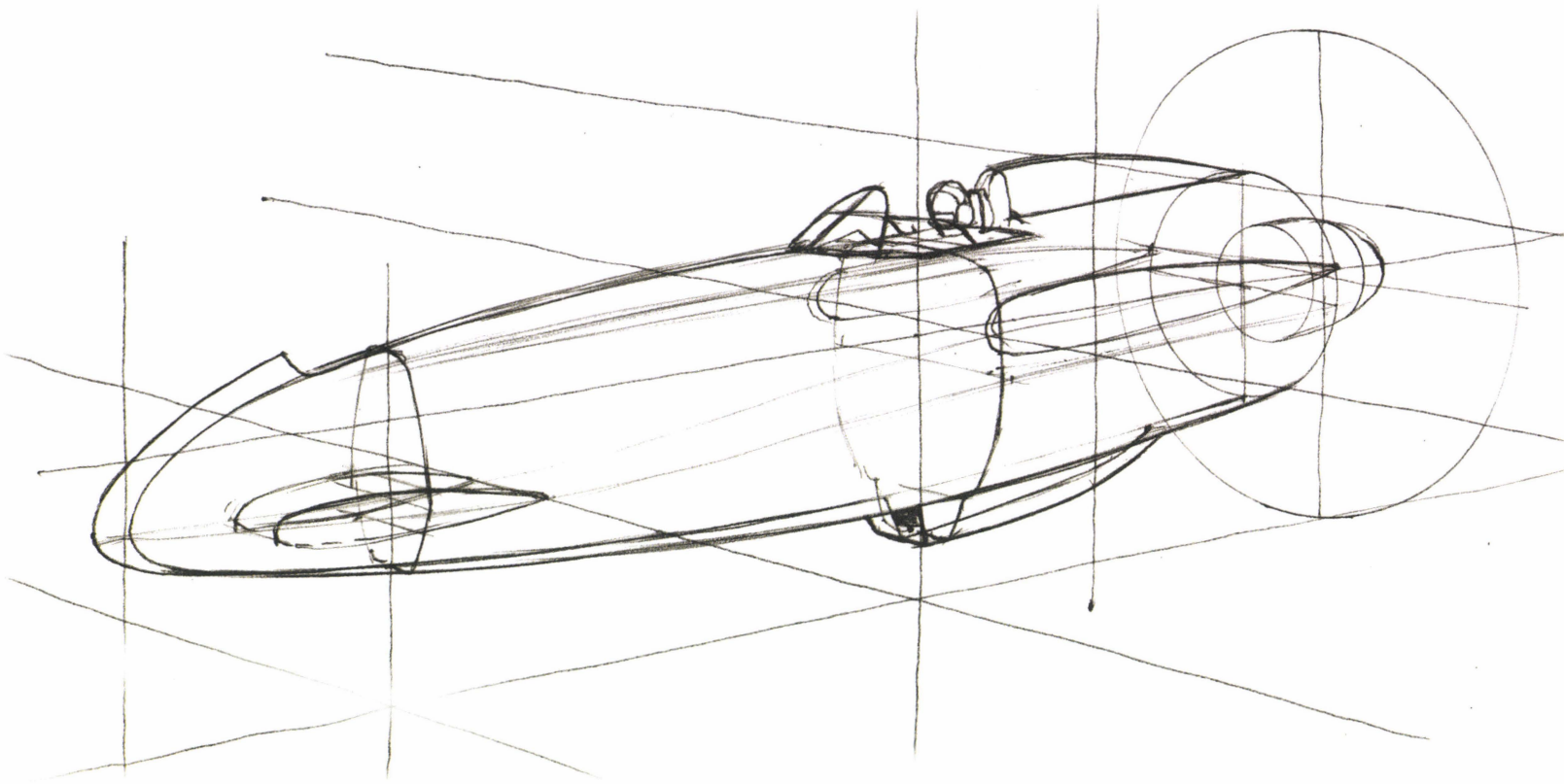

5. Next, draw the airfoil cross-section of the main wing toward the rear and, in this design, the canard wing (an elevator located at the nose of a plane instead of at the tail). Imagine this is where the wings intersect with the fuselage. They have been located on both sides of the fuselage using the section lines. Even if the wings are going to have a large fillet blending them into the fuselage, it is best to build them more accurately at this point by ignoring this blending form. This will make the next step much easier and more exacting.

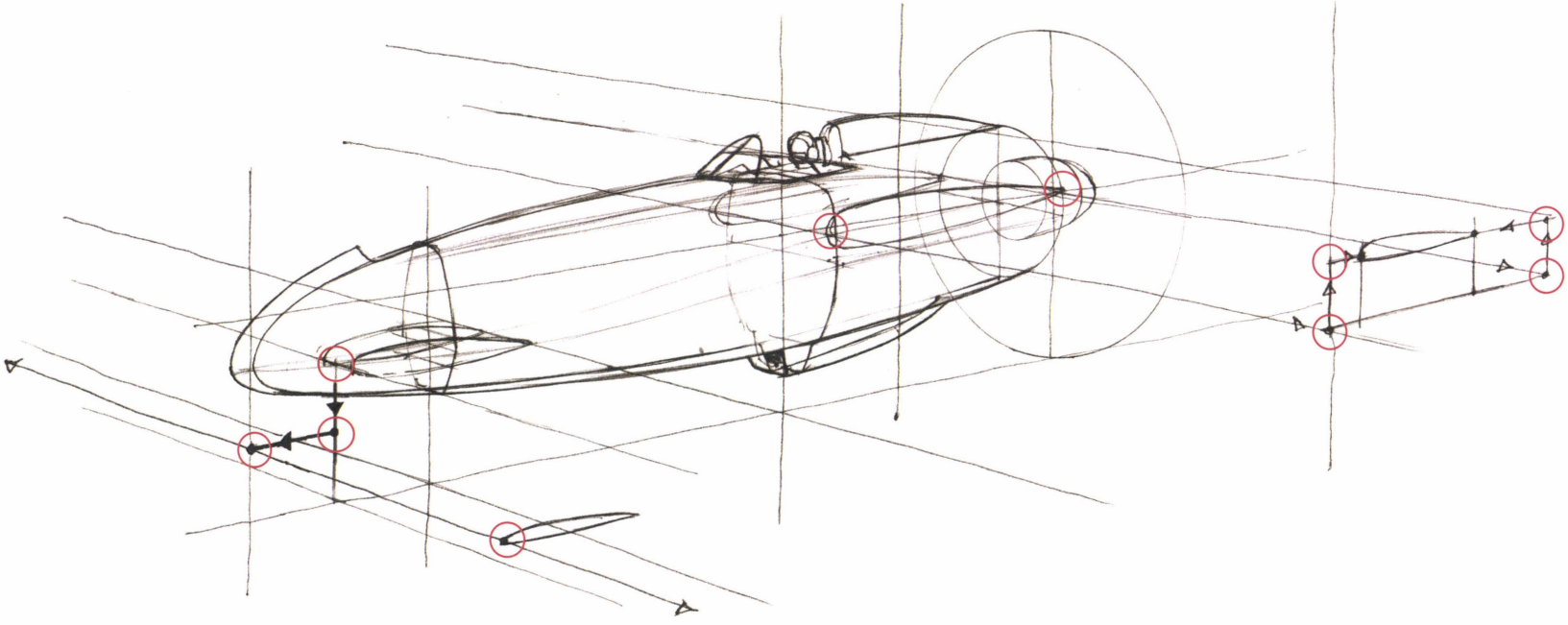

6. Now add the nearside wing tips. Do this by simply locating a wing-tip section away from the side of the plane. There are a few ways to accomplish this. This construction is a repeat of how the wing tips were located on the paper plane. The placement of the tips is fairly arbitrary, but the basic location is being guessed at by referencing the design sketch at the bottom of page 144. Locate a few reference points before drawing the actual wing-tip section by guessing the location of the wing tips by moving points through the X-Y-Z perspective space. The front of the canard tip was first moved down, then forward, and lastly out away from the centerline before drawing the section. The front of the main wing tip was moved out, then up and then back. The trailing edge point was moved out and up the same distance and then forward a bit.

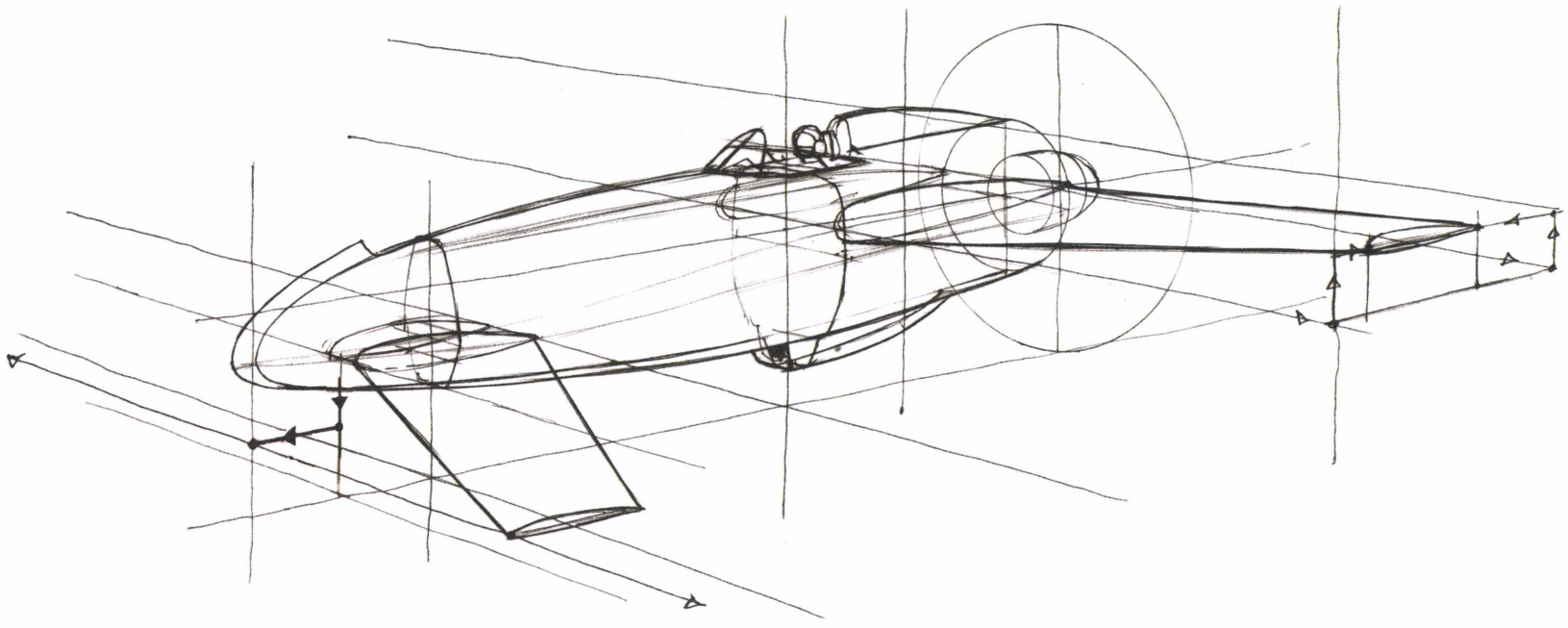

7. Connect the wing-tip sections with straight lines back to where the wings attach to the fuselage, as defined by the section lines there.

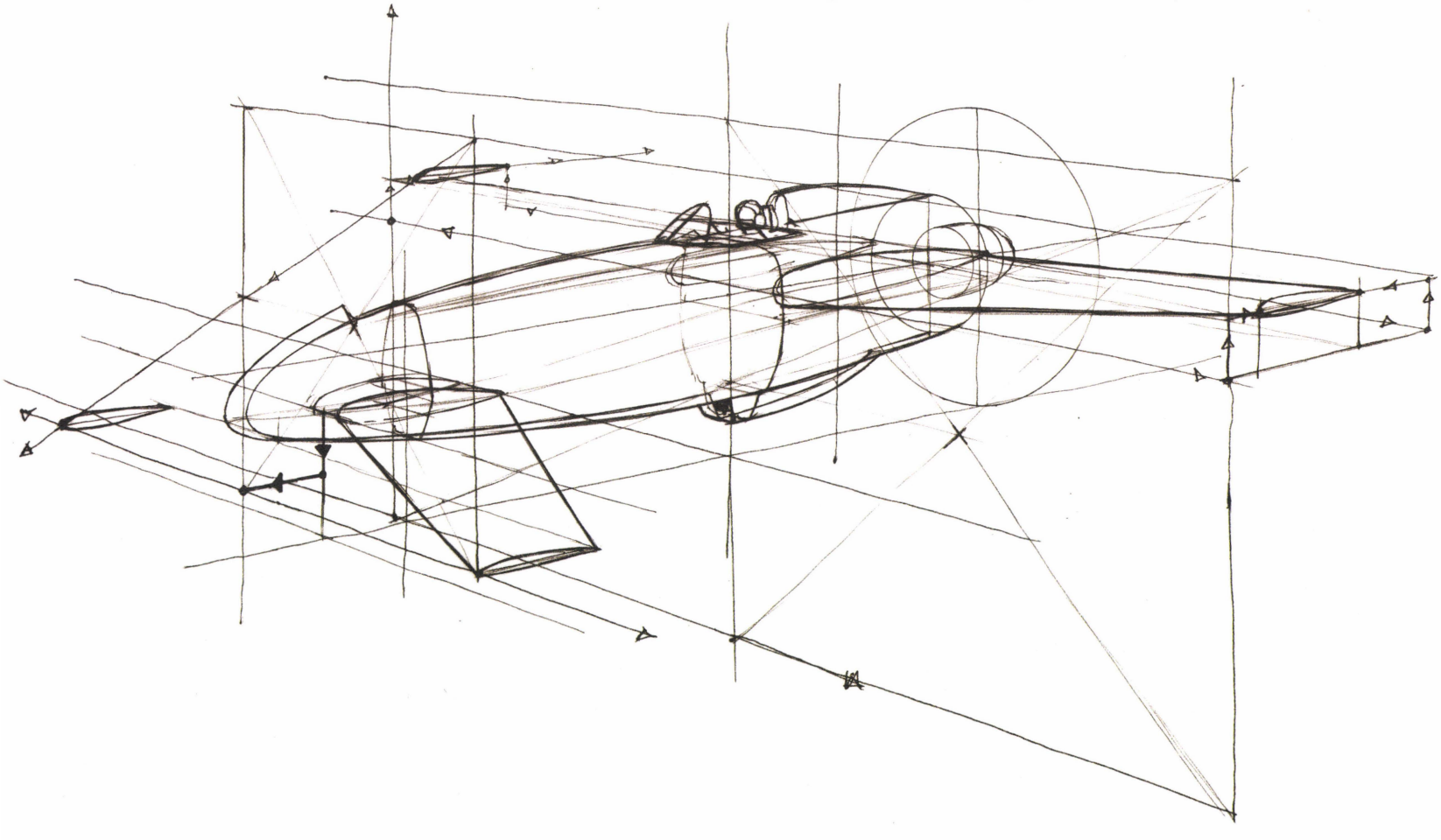

8. Mirror the nearside wings to the far side. To do this, use two large construction planes with one vertical line located through the top-view width position of each wing tip and two more vertical lines located on the centerline directly inward from the first two lines. Use the auto-foreshortening method to mirror the width of each of these construction planes to the far side. The construction plane located at the back wing is quite a bit taller than might be expected. Remember, increasing this height to make the construction plane more square will improve accuracy when mirroring the width to the other side. The plane's height is not driven by the width of the nearside wing tips, so make this construction plane whatever height it needs to be to help with accuracy.

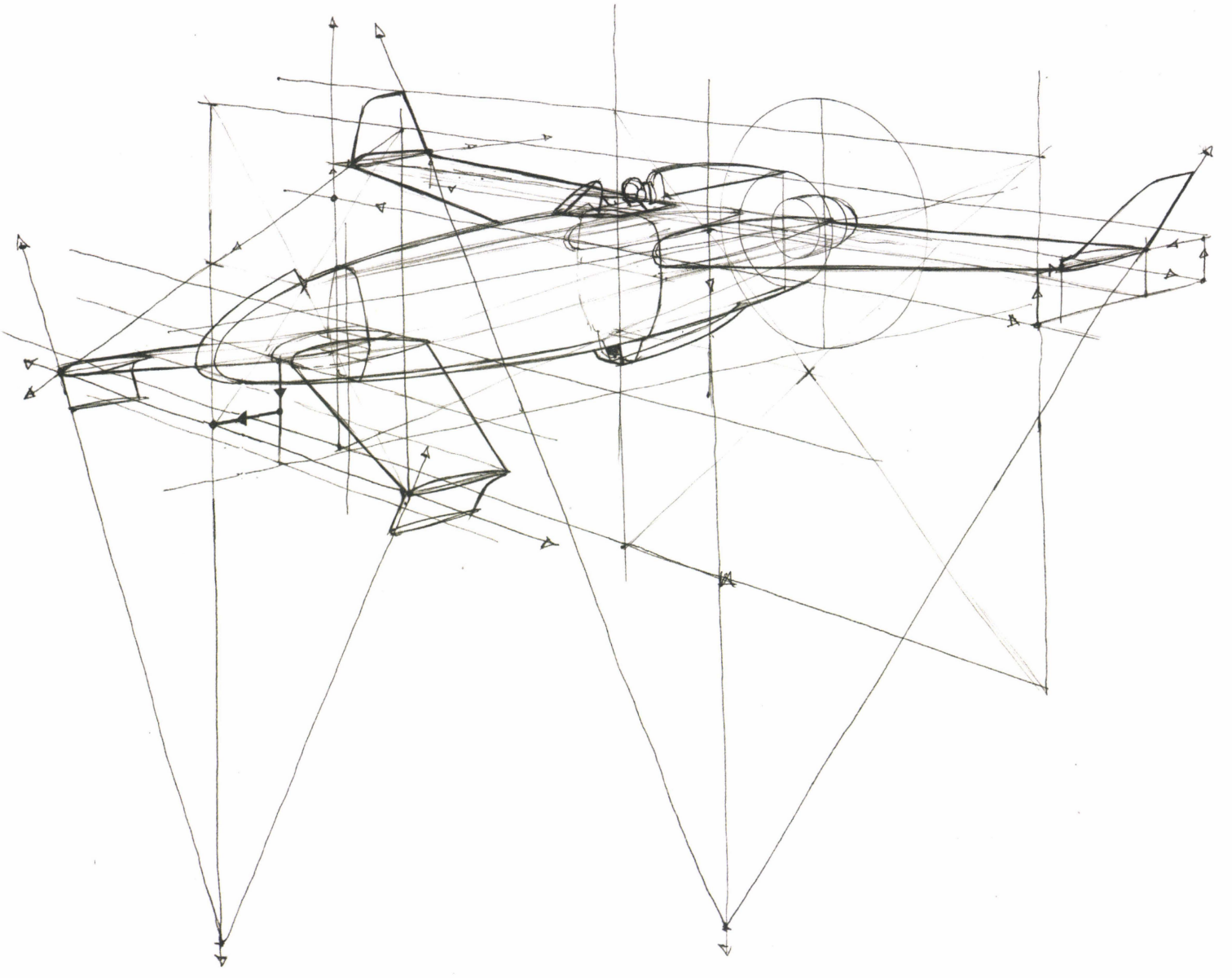

9. The far side wing-tip sections have been properly foreshortened, and the front-to-back positions have been transferred over, using a few more construction lines going to the LVP. After drawing the mirrored wing-tip sections, connect them back to the fuselage, repeating step 7. To add the up-turned and downturned winglets to the end of each wing, use the diagonal method to mirror the same front-view angle of each winglet. To adjust the side view of this line to something other than straight up, just move the single point located at the centerline at the bottom of the construction "V." For instance, if the main wing's trailing edge of the winglet leans forward, move the centerpoint of the construction "V" rearward. In this example, the winglets on the main wing have vertical trailing edges in side view. This construction is very effective and without it the position of these lines would have been very difficult to guess properly.

10. Add the remaining design details like cut lines, air intakes, flaps, etc., and blend the transitions of the wings into the fuselage. Remember—this is a working drawing, so feel free to make big changes and just draw right over the current construction. By focusing on design and the accuracy of the perspective construction, a stronger design will be created than by trying to make a beautiful line drawing.

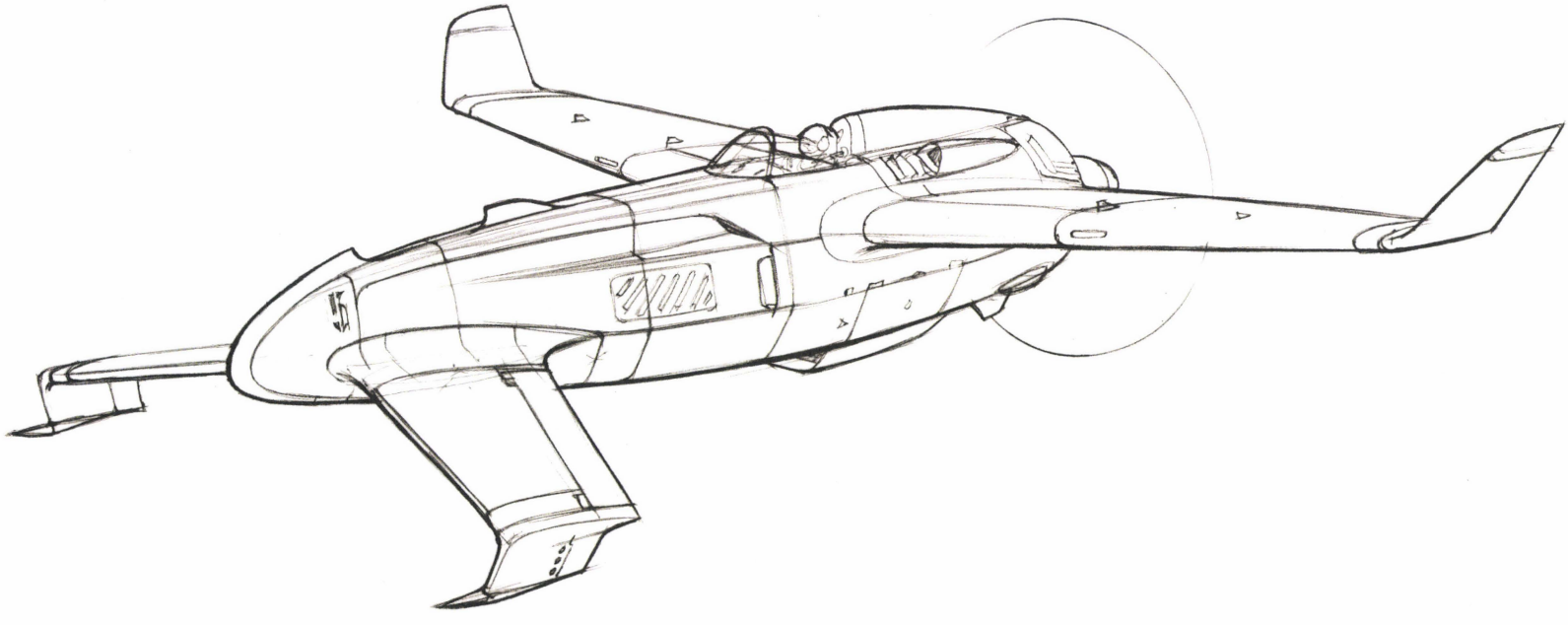

11. Finally, create a cleaner presentation drawing. Slip the working drawing under the top sheet of paper in a sketchpad. Use any drawing tools that might help, such as ellipse guides or sweeps. When doing the overlay drawing, it is important to communicate enough of the section-line information about the interior surfaces of the form, as there is not yet any value on the drawing to help indicate the form transitions. Even if the design does not have cut lines on its surface, it's a good idea to add a few of these at this stage. Later, if choosing to render the drawing with value, these section lines can be erased, as the value will take over in communicating the transitional forms. The working drawing and this final overlay were all done with a ballpoint pen on Borden & Riley 100s paper.

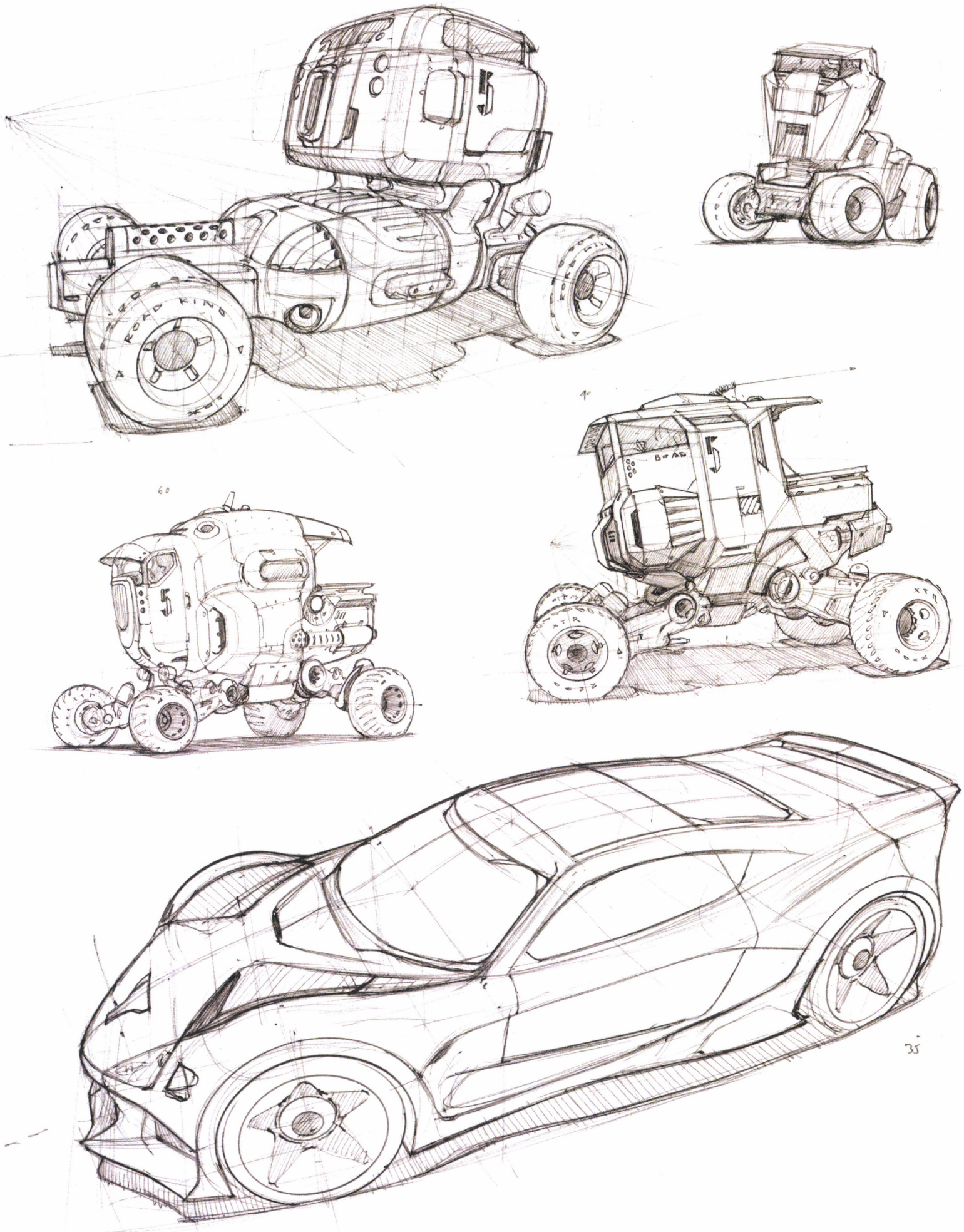
ROAD KING
60
40
35

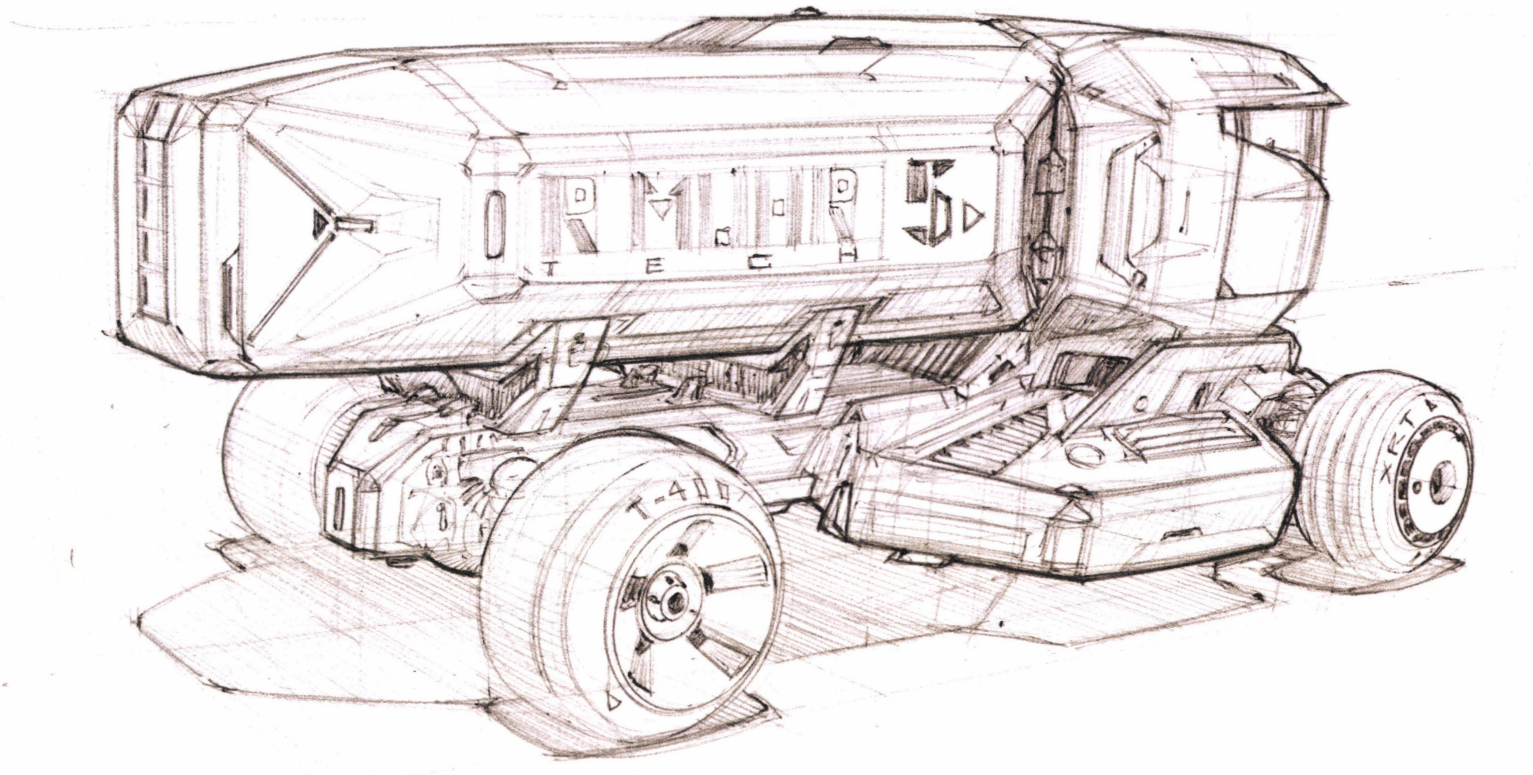

CHAPTER 09

DRAWING WHEELED VEHICLES

To learn how to draw wheeled vehicles from the imagination, one needs to understand basic design-thinking and vehicle architecture. Since the goal of this chapter, like the rest of this book, is to empower the reader with practical perspective-drawing skills that can be used to draw objects from the imagination, some design knowledge is required. Much like the previous chapter on drawing aircraft, this chapter covers visual research, defining a design goal, vehicle packaging/architecture, loose sketching, and, finally, a complex step-by-step construction. The range of vehicles that can be designed and drawn is infinite, and by no means is one chapter a full education in how to draw and design them all. The knowledge and techniques shared here are some of the most useful and common ones needed on the way to creating fantastic vehicle drawings from your imagination. So pick up a pen or sharpen a pencil—let's get started!

VISUAL RESEARCH

open wheel	pickup truck	sports car	semi-truck
off-road	SUV	hatchback	military
classic	station wagon	racecar	emergency
hot rod	sedan	van	rescue

Above is a short list of the huge variety of vehicle types. The images on these pages are examples of the types of vehicles that can be used to inspire designs. Going to car shows and museums, or snapping a quick photo of a garbage truck as it passes, will provide great reference when trying to draw your own vehicle creations. These types of photos are very helpful, especially when it's time to add realistic details to a design.

Just like the airplane demo in the last chapter, start by expanding your visual library of vehicles. Sketch studies of different types of vehicles either from observation or photographs; this will help you learn more about shapes, graphics, proportions, silhouettes, details, and surfaces. When doing these studies, try to figure out how these observed vehicles could be depicted with lines. Experiment with differing line weights and quick ways to indicate what you see, which will increase your observational skills. When you must create original designs without using reference, having researched vehicles or other objects this way will give your designs more realism and learned sensitivity to their proportions.

When drawing wheeled vehicles—or anything, really—pay special attention to the very first lines used to communicate the form of an object. Do not rush into drawing all the details before getting the proportions right; no amount of beautiful draftsmanship will make a design attractive if the proportions are wrong.

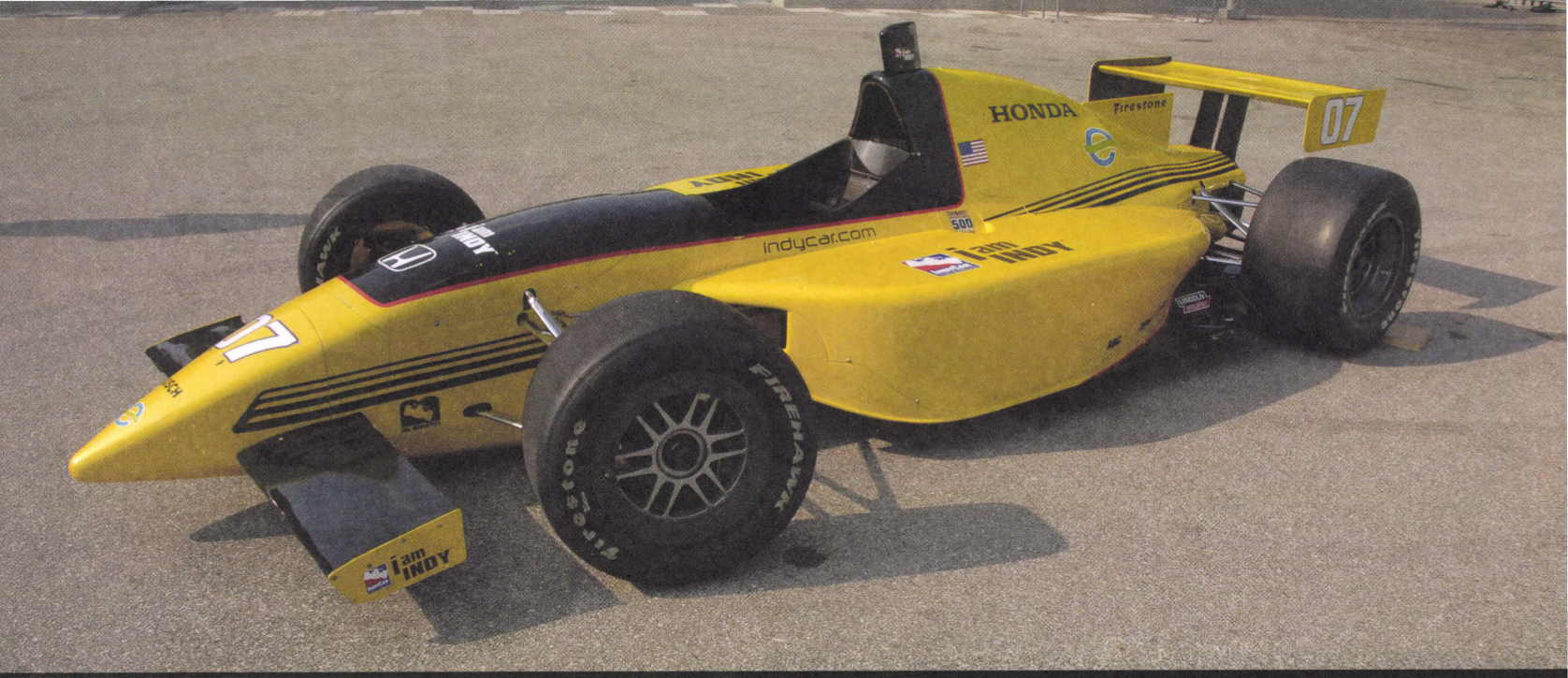
HONDA
Firestone
07
indycar.com
I am INDY
FIREHAWK

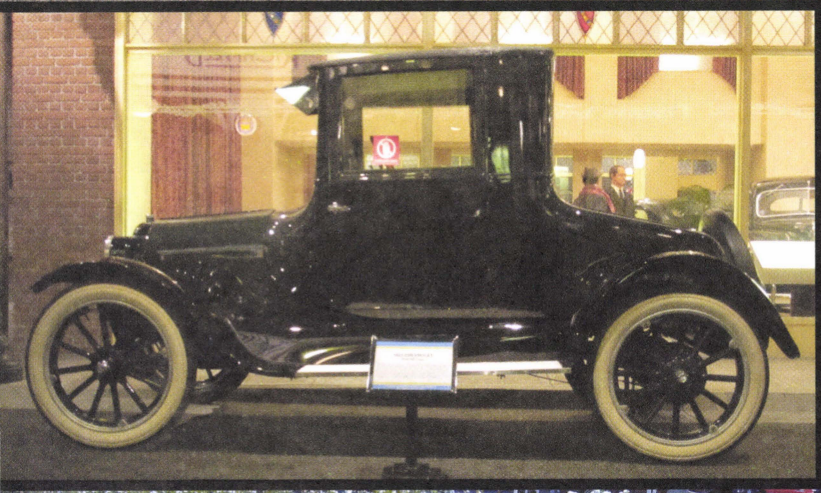

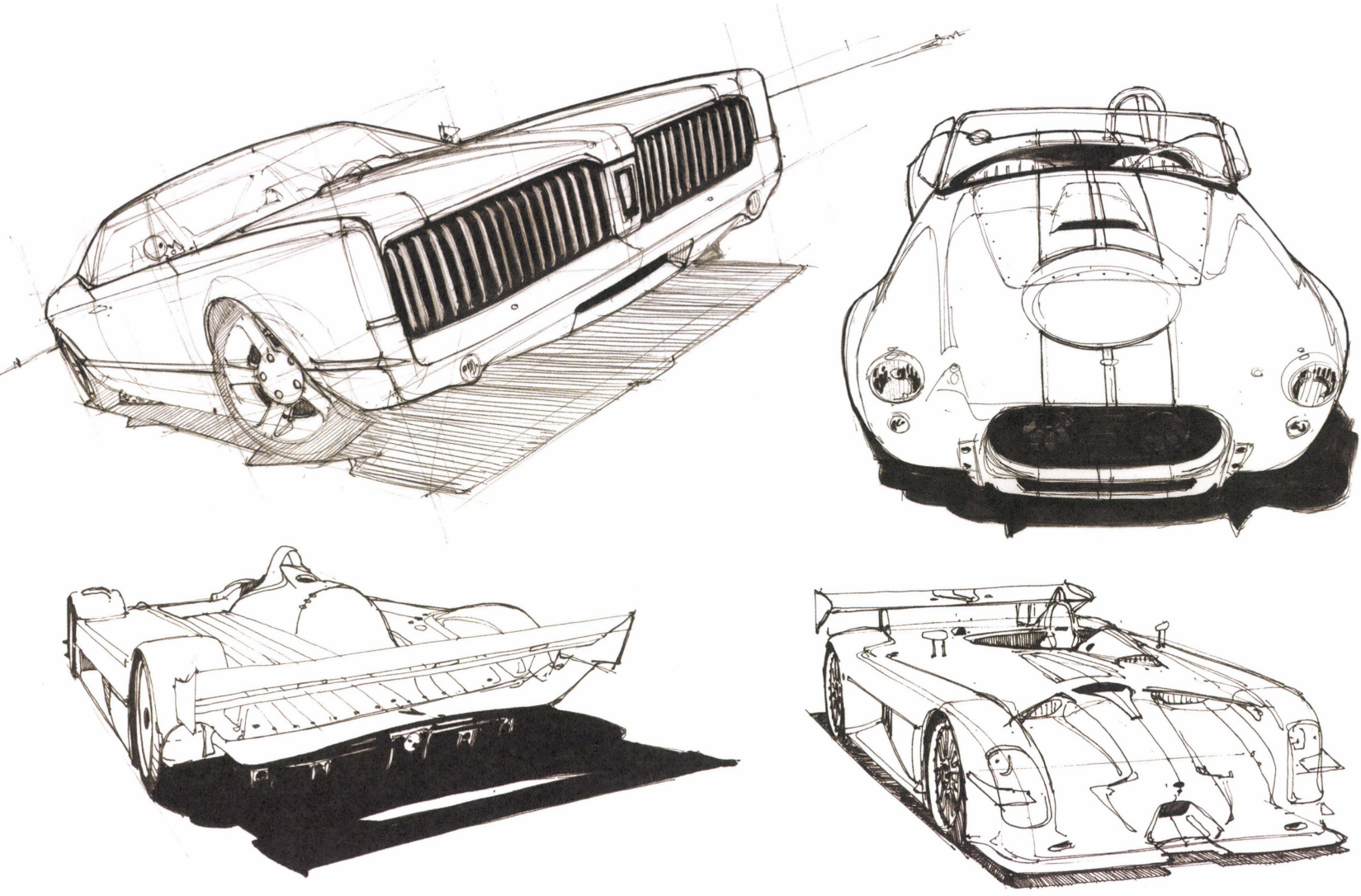

Here are a few examples of sketching cars from observation.

The sketch at the upper-left was done with a ballpoint pen. The intent was to capture the dramatic wide-angle-lens effect of the photograph.

The sketch at the upper-right also has a wide-angle perspective, but a few simple reflection lines were added as a way to communicate some of the form changes without having to add X sections. In this simplified, clean style it is understood that this is a car because it's easily recognized as being a real car, that exists in real life. By placing the stronger graphic elements in the proper places, the basic design can be understood. It would, however, be almost impossible for a model builder to build a model of this car from this drawing, as very few of the surfaces are defined by the lines. Keep this in mind when transitioning from observational drawing to imaginative drawing. The big graphic elements like headlights, windows, grills, and air intakes are great to communicate a simplified graphic aesthetic, but they don't help much to communicate the form of the object.

Which is more important? It depends. If you are designing/drawing a limousine that is going to be painted white, and it has black tinted windows and a black grill, then spending time getting the shape of these graphically high-contrast elements right is going to go a long way toward making the design look correct and attractive. This is because anyone who looks at this type of limo will see these strong, graphic shapes long before looking at the transitional forms of the vehicle. Prioritize these elements and draw them as appropriately as possible giving them extra attention.

We call the organizing of visual elements as a viewer gets closer to an object "proximity-based styling."

HAVE AN IDEA OR A GOAL BEFORE STARTING TO SKETCH

A great way to start is to write down ideas to explore and then set the list nearby so it can be referenced. During the sketching session, refer to the list, not only to see if the sketch is on-target with what is being designed, but also to rework the list if exciting new directions are discovered.

If the design requirements came from someone else as part of a design job, then highlight the items that absolutely cannot be overlooked. It is an easy mistake to fall back on shapes that have been drawn before, that might be favorites, but are not really appropriate for the design brief that was created for the job.

Let's look at a simple design brief and a few of the first sketches exploring the ideas in it.

GOAL:

Design a sci-fi hot rod from another world.

AESTHETICS:

Explore angular, nontraditional graphics and surface transitions while retaining a familiar hot-rod proportion, stance, and silhouette. Strive for a somewhat aggressive and sinister look.

CONSTRUCTION and PERFORMANCE:

Investigate uncommon manufacturing techniques and advanced engineering concepts that might be impractical or cost-prohibitive on Earth. The power source should be an alternative to an internal combustion engine; make it something otherworldly yet familiar enough that someone looking at the design would know that it is a power source. Seating capacity: two.

Creating a simple design brief like this one can be a great way to focus the imagination. This is "positive imaging," the practice of trying to pre-visualize a positive outcome of an event before it happens, or, in this case, before the design and the drawing exist. Try to imagine the entire sketch. Mentally go through all the same steps that would be done on paper, and designs might start to evolve before you even pick up a pen. The following two pages show some of the sketches that were done to explore the sci-fi hot rod design brief.

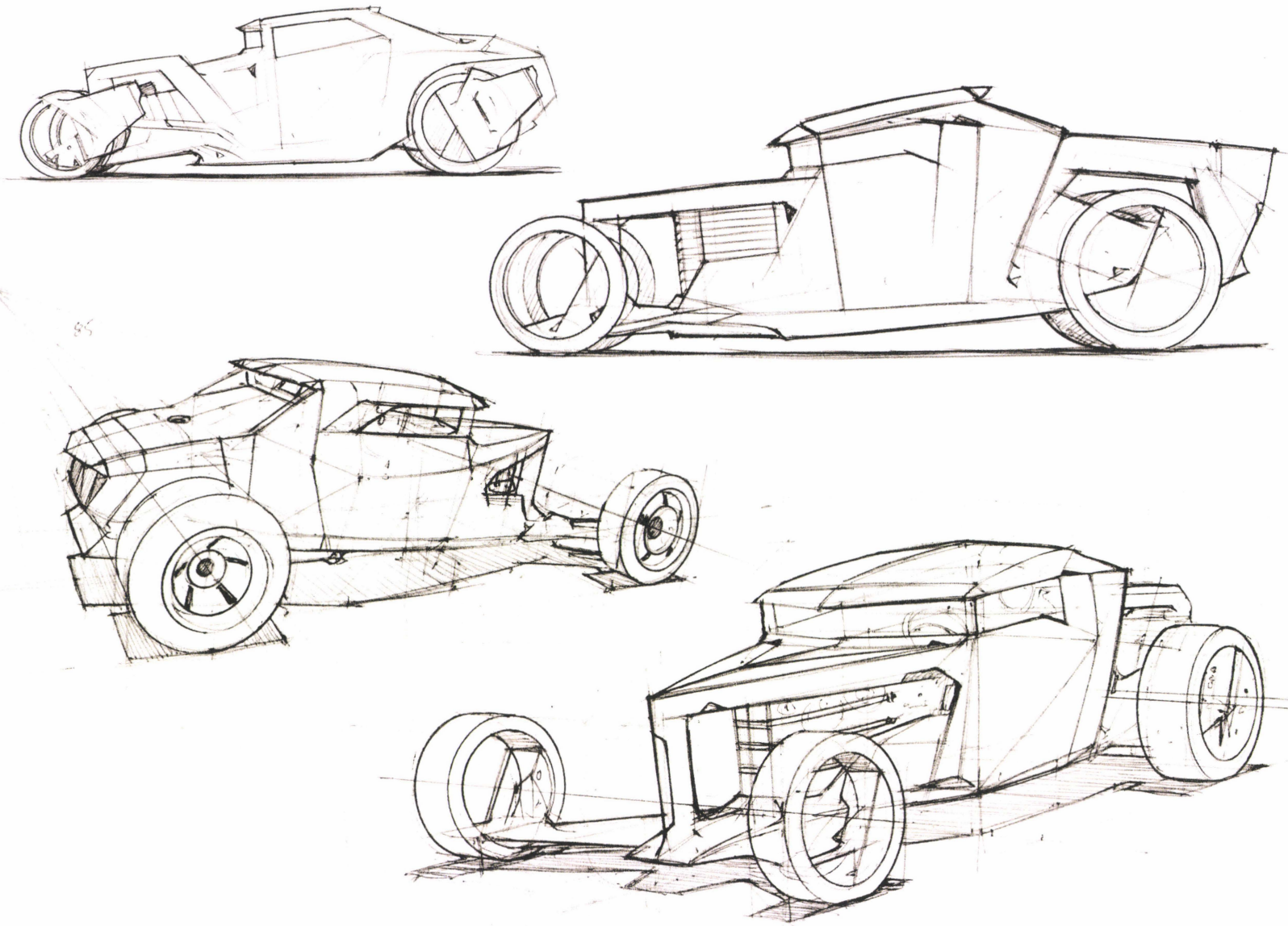

Try to imagine the best way to begin drawing. With this sci-fi hot rod, the simplest view was the side view. The four side views on this page were drawn first. This provided good information to use when drawing the more difficult and time-consuming perspective views. While doing these sketches, the original design goal was always kept in mind. Remember, do not get off track and draw what is loved and familiar instead of what is assigned in the design brief!

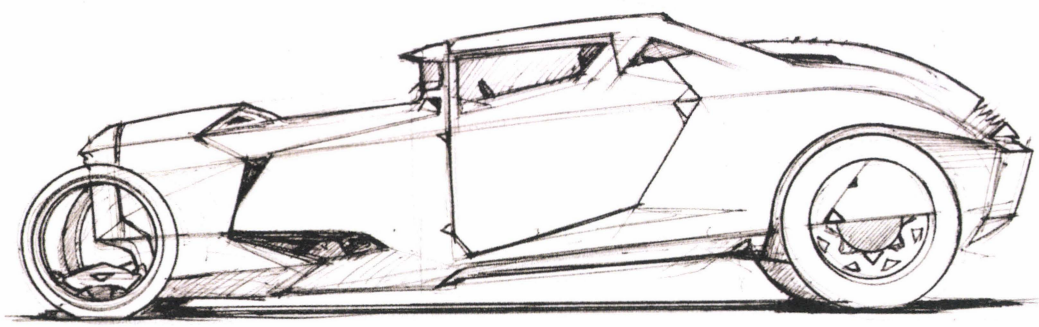

Observe that the facing page involves value and color. It is fun to see how this design concept evolved into these renderings after the line sketches were finished. The top value sketch was done with traditional media, marker, wax pencil, and chalk. The two on the bottom were done using Photoshop.

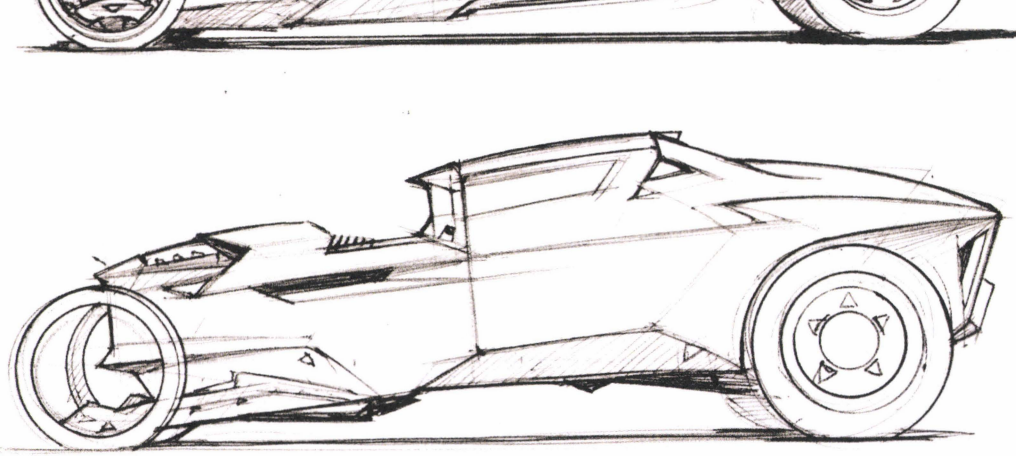

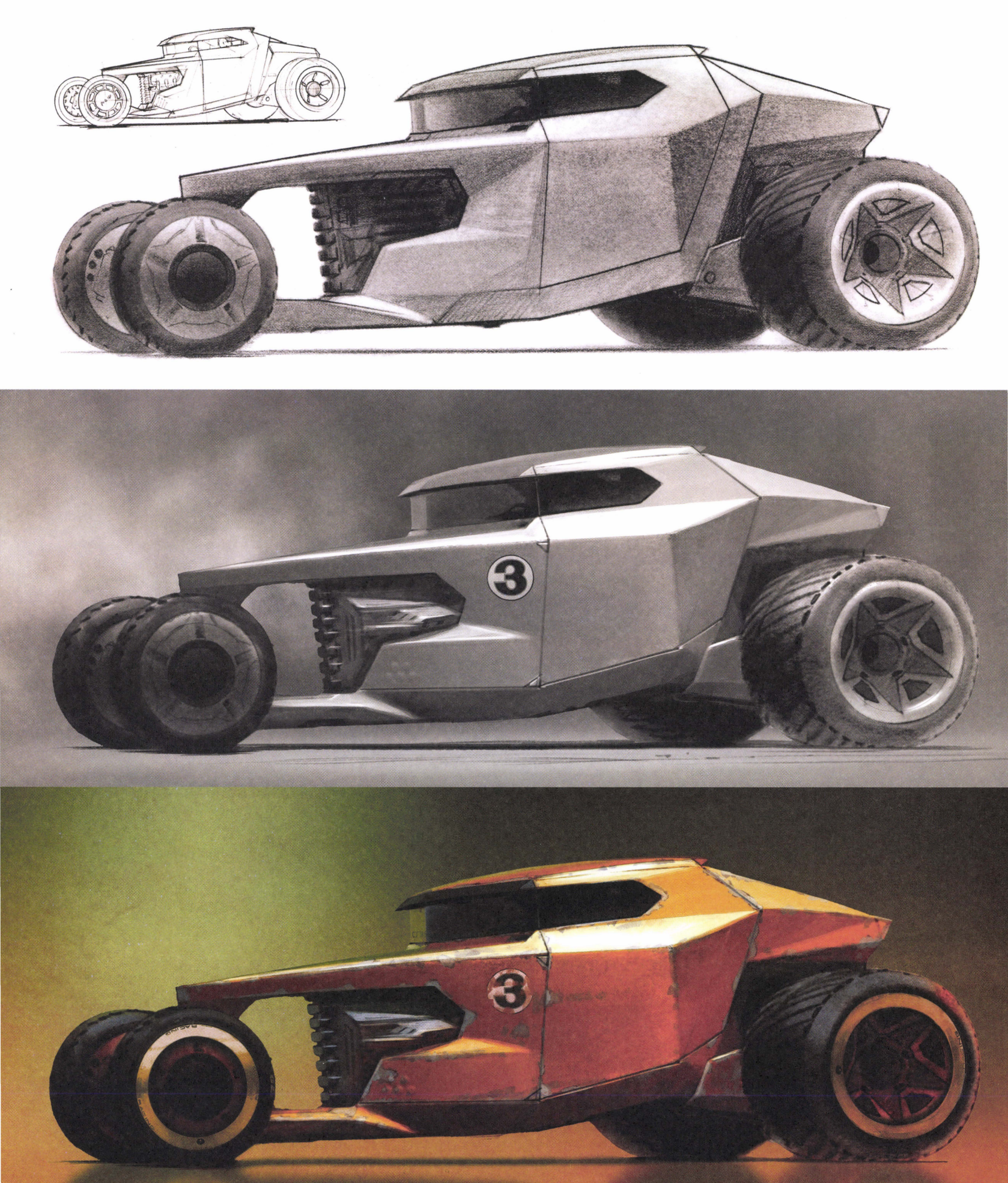
3
3

SOME BASICS ON VEHICLE PACKAGING AND ARCHITECTURE

Anytime a new object is designed, much of its originality and innovation is determined by the arrangement of its component parts. When designing vehicles, this specifically has to do with things like placement of the power source, the cargo and the passengers, or how long the wheelbase is, how tall the vehicle is, and how high off the ground it sits. All of these design decisions can be thought of as "packaging," or the "architecture" of the vehicle. Making design choices at this early stage can be what sets one vehicle apart from others.

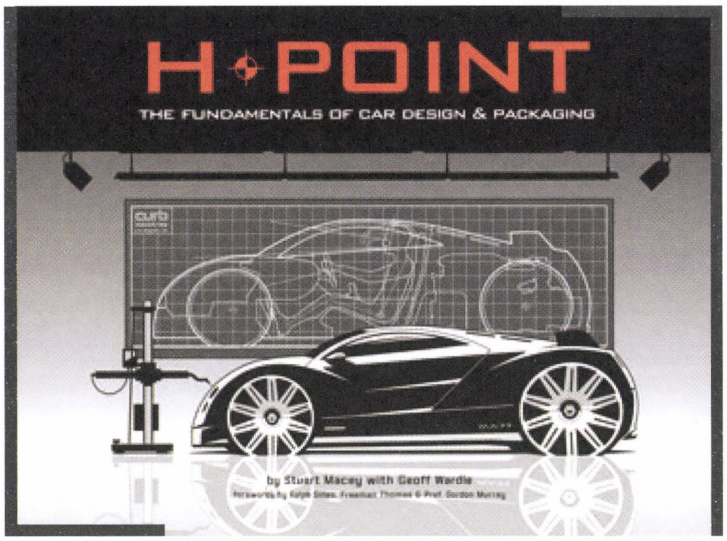

Some objects simply have a package that cannot be manipulated in a way that allows for creation of an aesthetically pleasing skin around all the hard points. "Hard points" is a common term used to describe the areas of the package that cannot be moved under any circumstances. These usually have to do with engineering constraints; if moved, performance and/or safety are sacrificed. Vehicle packaging is an important area to study in order to really improve design ability in conjunction with drawing ability. (Design Studio Press offers an excellent textbook on the subject of automotive packaging, *H-POINT: The Fundamentals of Car Design and Packaging* by Stuart Macey with Geoff Wardle. This book has 224 pages dedicated to the subject.)

Whether designing fantasy spaceships or power tools, packaging is at the core of making designs at least look functional. Moving around the elements of the package is a great way to create variations in an object's look. For instance, a car with a front engine will have a different silhouette and proportions than a car with a mid-engine, due entirely to the difference in the packages. The more thoroughly this topic is understood, the more it leads to innovation, and the skin of the object being sketched will reflect the effort put into this area of the design.

It is no coincidence that technical perspective-drawing techniques all lend themselves to designing and drawing the package of the object before drawing its silhouette. The method of drawing from this book—from the ground plane up and through the object like it has an invisible skin—empowers the artist to better visualize the package and move around its elements to support the desired aesthetic.

air dams
air splitters & supports
brand logos
bumpers
doors
door handles
engine
exhaust pipes
exhaust vents
fender flares
fog lights
gas-tank caps & doors
graphic panels
graphic stripes
headlights
intake scoops
intake grills
interior
license plates
model name
numbers
roof rack
side markers
spoilers
sunroof
taillights
tires
trailer hitch
trim
wheels
windows
wipers

Much like having a simple design brief before beginning to sketch, it is also helpful to write a list of things to design that are specific to the object. This list is easily generated when doing visual research and sketching (from observation or photos) existing vehicles that are similar to those to be created from the imagination. Experienced designers who know the subject very well rely less on the list, but starting out, it can be very helpful.

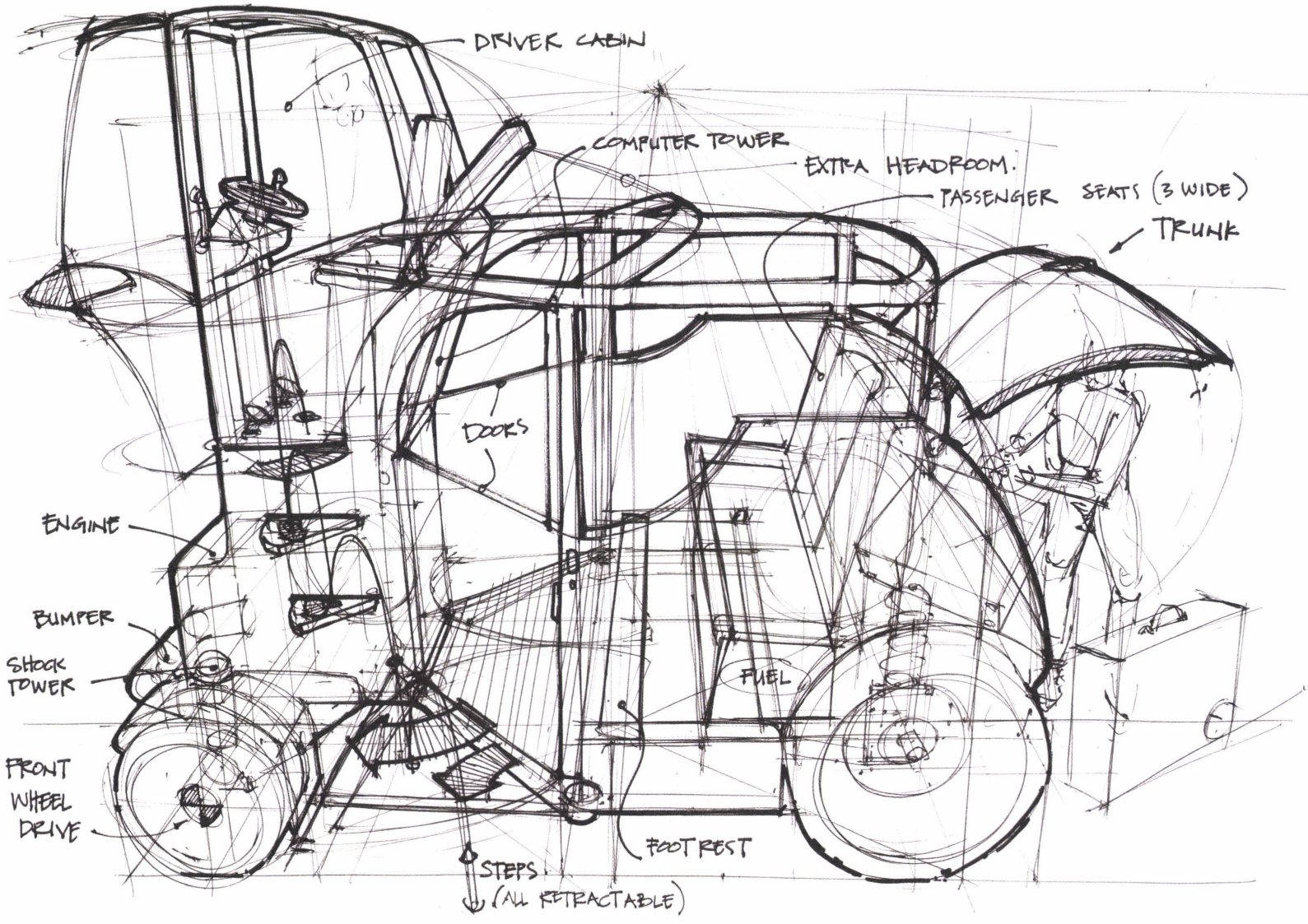

TAXI PACKAGE

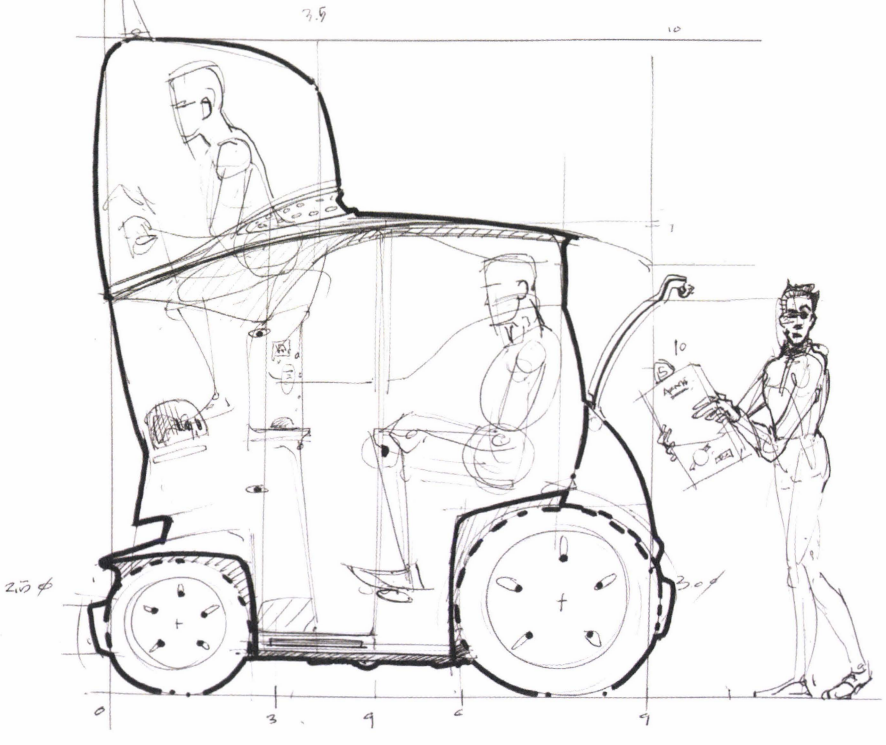

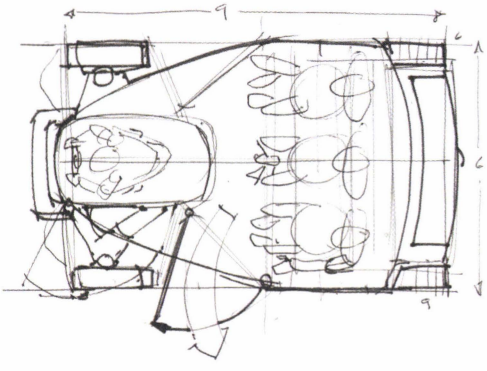

At the top is an illustration of the package for a concept taxi from the book *Start Your Engines*. Even simple package sketches can help to invent new vehicle forms.

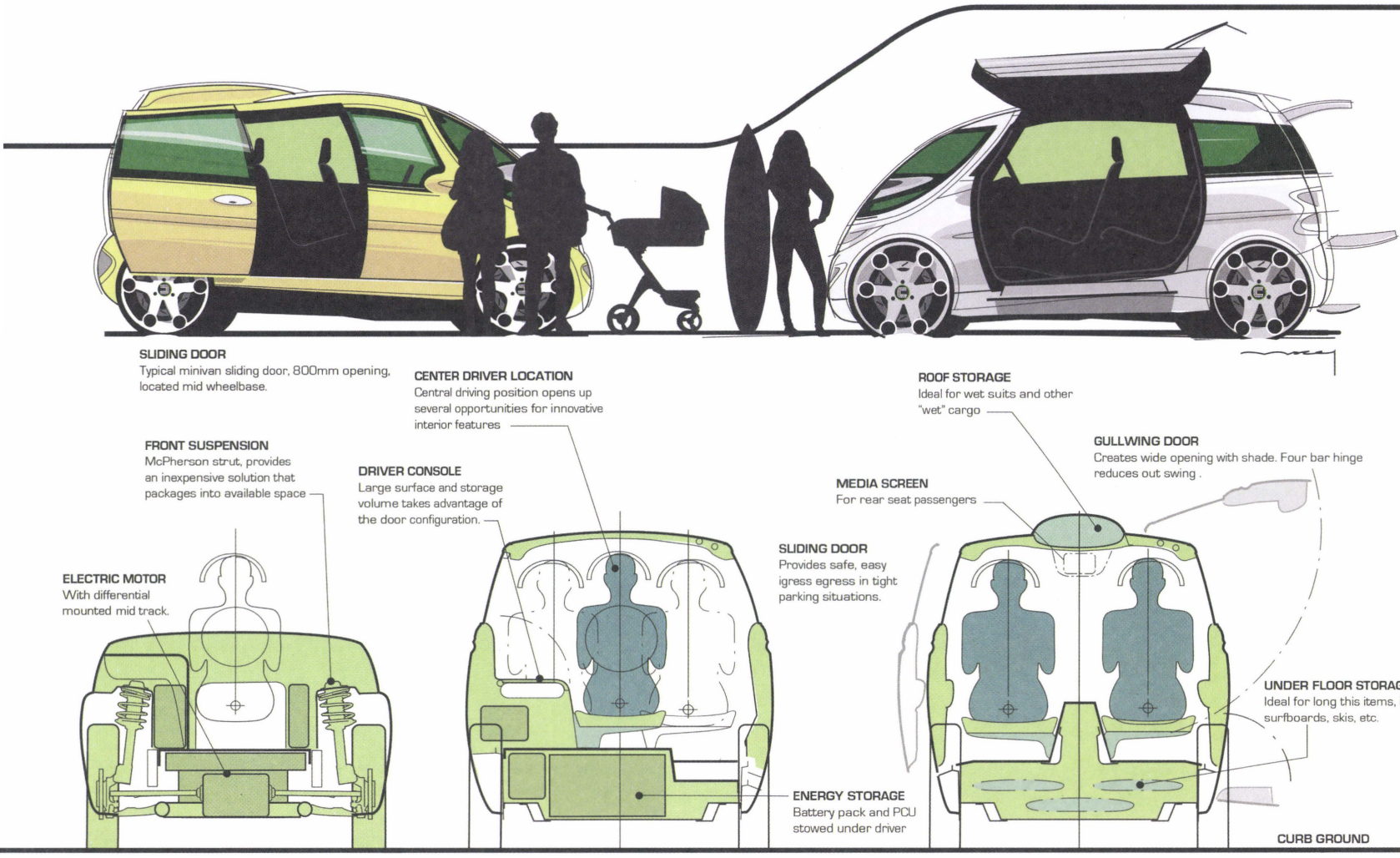

SECTION thru FRONT SPINDLE SECTION thru DRIVER SECTION thru SECOND ROW

EXTERIOR DIMENSIONS

Length	*3690*
Width	*1690*
Height	*1830*
Wheelbase	*2520*
Track	*1515*
Tire OD	*720*
Tire Size	*185 / 60 R20*

INTERIOR DIMENSIONS

Front head room	*1025*
Front H to ground	*800*
Front Seat Height	*230*
Mid head room	*980*
Mid shoulder room	*1380*
Rear head room	*970*
Rear shoulder room	*1360*

TARGET SPECIFICATIONS

Range	*250 miles*
Fuel efficiency	*80 mpg (equiv.)*
Top Speed	*90mph*
Acceleration 0-60	*7 sec*
Weight	*1800 kg*
Cost	*$25 -35 k*
Production Volumes	*75k*

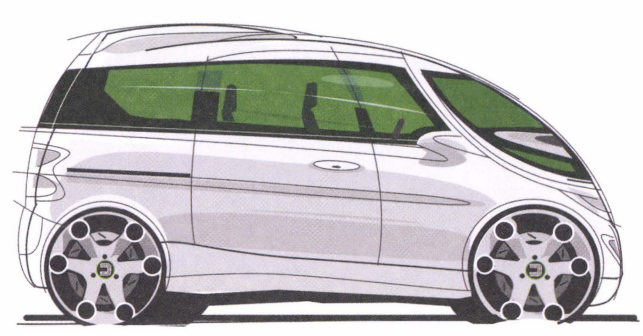

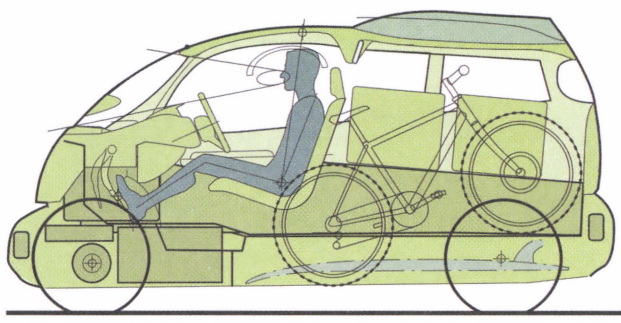

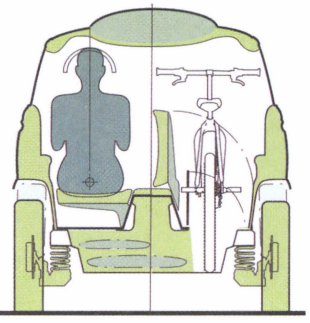

OVERSIZED VERTICAL CARGO STORAGE

CANTILEVERED SEATS
Hinge up to provide access to under floor storage and allow tall objects to package

BODY CONSTRUCTION
Stamped steel unibody

BODY CLOSURES
Asymmetrical side doors provide easy access and create opportunities for unorthodox interior design.

DRIVER SEATING
High H Point provides command of the road seating, low seat height creates sporty posture

SECOND ROW SEATING
Staggered along side driver provides open room seating

ROOF STORAGE
Ideal for wet suits and other "wet" cargo

REAR SUSPENSION
Trailing Arm system optimizes under floor cargo space

Forward Vision
up angle 12°
down angle 113°

VAC System
ackaged along side driver

ree Crush Space
r frontal impact

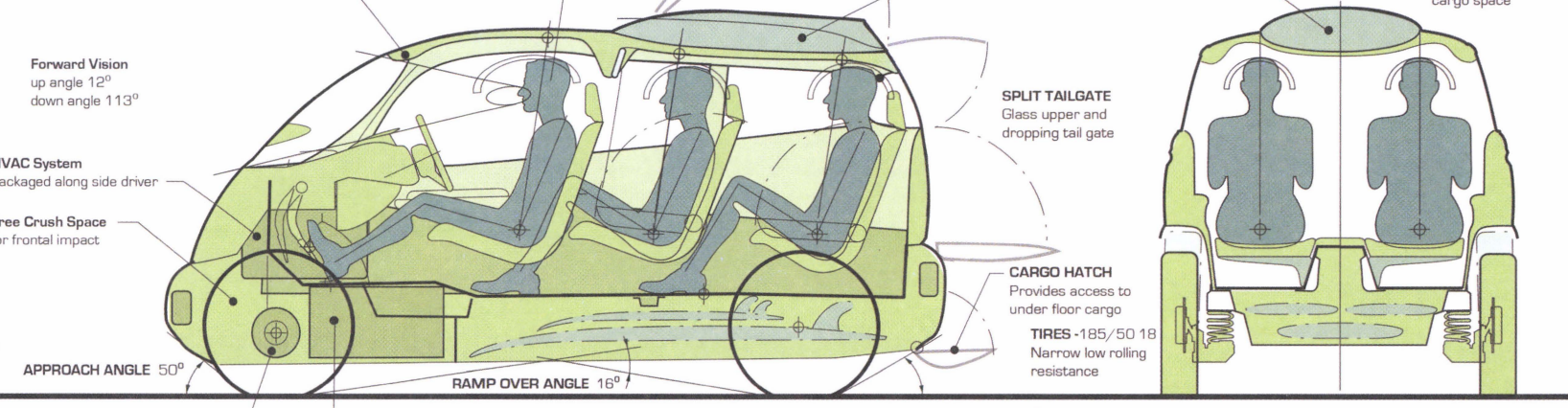

SPLIT TAILGATE
Glass upper and dropping tail gate

CARGO HATCH
Provides access to under floor cargo

TIRES -185/50 18
Narrow low rolling resistance

APPROACH ANGLE 50°

RAMP OVER ANGLE 16°

DEPARTURE ANGLE 50°

ELECTRIC MOTOR
With differential mounted mid track.

ENERGY STORAGE
Under floor battery pack

SECTION thru REAR SPINDLE & REAR OCCUPANTS

A sustainable, small footprint vehicle for a young family with an active, coastal lifestyle

"the beach hut"

curb™

© copyright 2010 - stuart macey

This is a great automotive packaging example by Stuart Macey. Obviously this is more advanced than necessary at the sketching phase of a project, but what is most important to understand is that this is the type of thinking and visualizing of the packaging that needs to inform vehicle sketching. Even though this is a package for an automobile, putting the same thought and research into how to arrange the component parts of any object will help not only in drawing more believable versions of a creation, but also in innovating and pushing the limits of the overall form of the object.

To learn more about Stuart's work and his company Curb go to: curbindustries.com

FLEXING YOUR CREATIVITY

We will again start with some loose sketches to find a design direction and then jump into a more technical step-by-step perspective construction. Any medium can be used—ballpoint pen, pencil, markers, digital tablet—sketch with whatever is comfortable. A tried-and-true technique for starting a sketch is to use a very light marker. Sketch whatever view is most easily visualized. Side views are the simplest to do and are great for quickly dreaming up a variety of designs, as there is no need yet for perspective. Just show a little of the ground plane with a cast shadow from the vehicle and the far side tires to help it feel a bit more solid and dimensional. This phase is all about ideas first and technically accurate drawings second. It is also a good time to practice freehand line quality. What matters is *what* is drawn, not *how* it is drawn.

Most of these sketches were started with a Copic N-0 light gray marker, and then ballpoint pen and ellipse/circle guides were used to finish them.

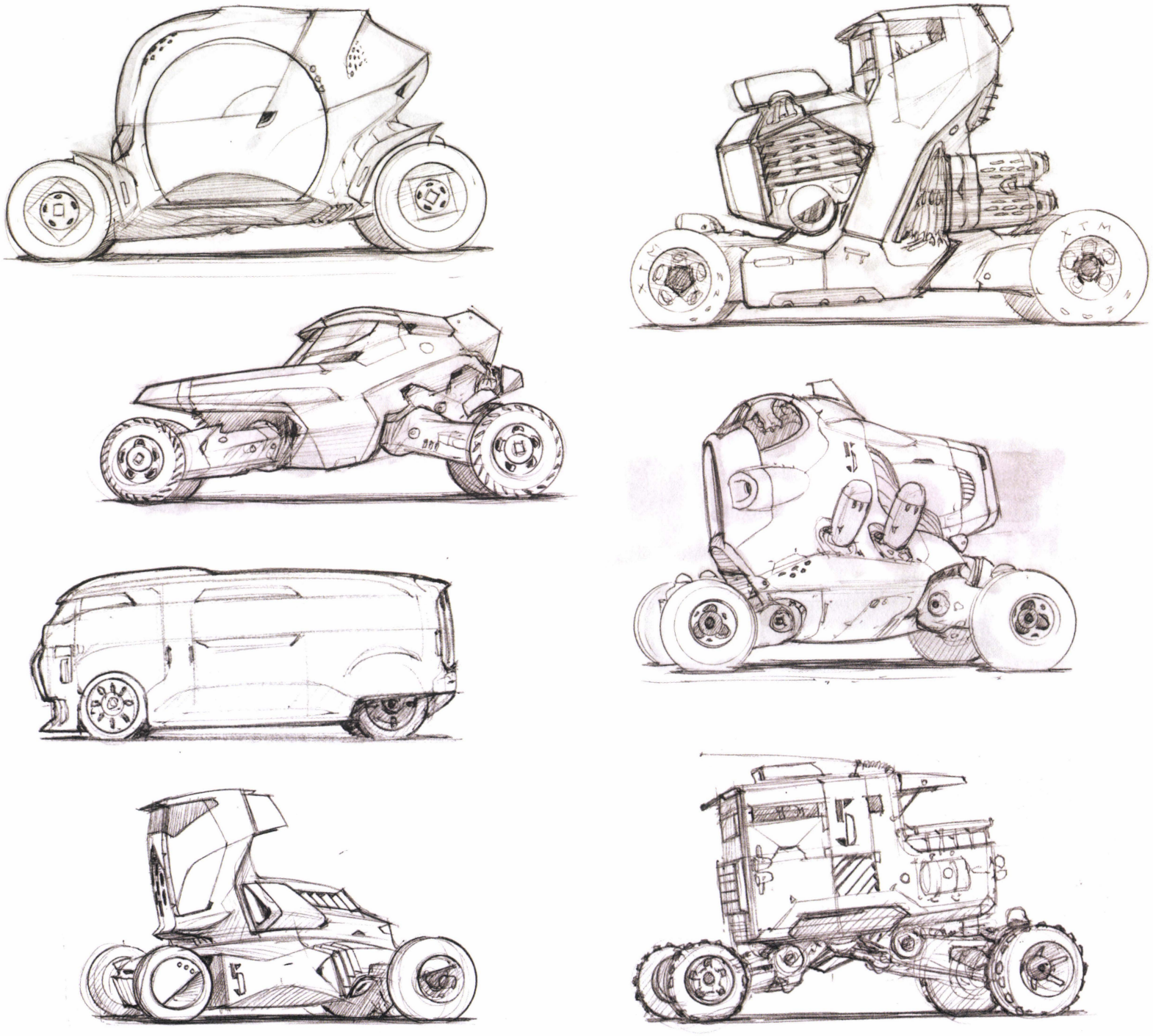

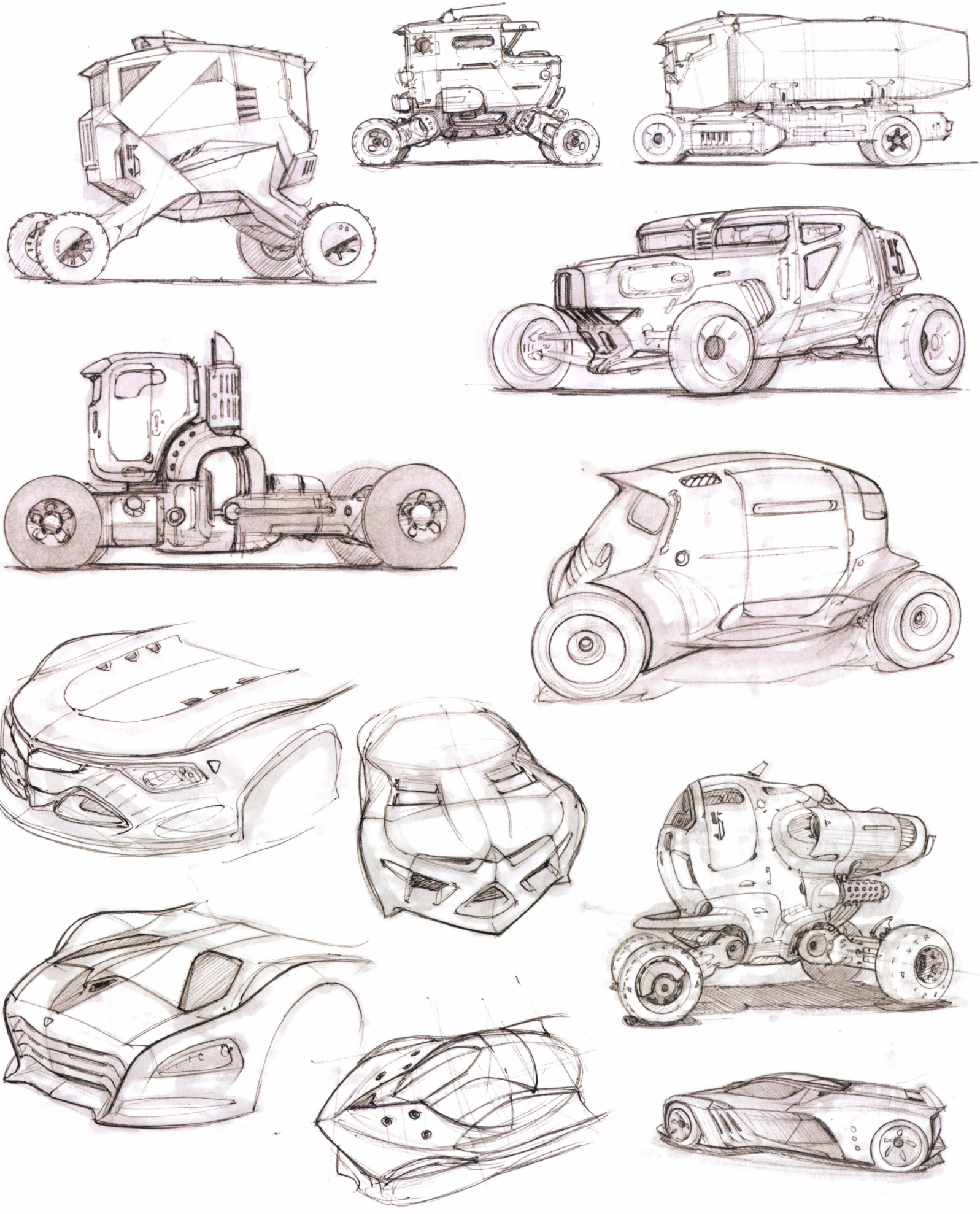

GRIDS, GRIDS, GRIDS!

As previously mentioned, using a good perspective grid is the most accurate way to draw an object in perspective. Here are ways to make grids more vehicle-centric. You can make your own grids by hand or use the ones from this book simply by making photocopies of those pages.

The overall concept, when making perspective grids for vehicles, is to put extra attention on that special relationship between a) the overall length, width, and height of a bounding box that is defined by the dimensions of the vehicle body, and b) the position and size of the wheels as they relate to this bounding box. Getting this right is essential when drawing vehicles. It can make or break the success of the drawing.

Let's get into methods. Below are a few simple grids that establish the view and the camera lens, the top four being wide-angle and the bottom one being a longer lens.

When doing these simple grids, get the wheels set up properly in perspective, establish the wheelbase and the overall width. For the wheelbase, know that many cars have about 3 wheels' worth of space between the front and rear wheels. The overall width across the car is 2.5 to 3 wheel diameters. A roughly 25-inch or 640mm wheel/tire diameter is common for full-size cars. Sensitive scaling of the wheels is one of the best ways to communicate the size of the car.

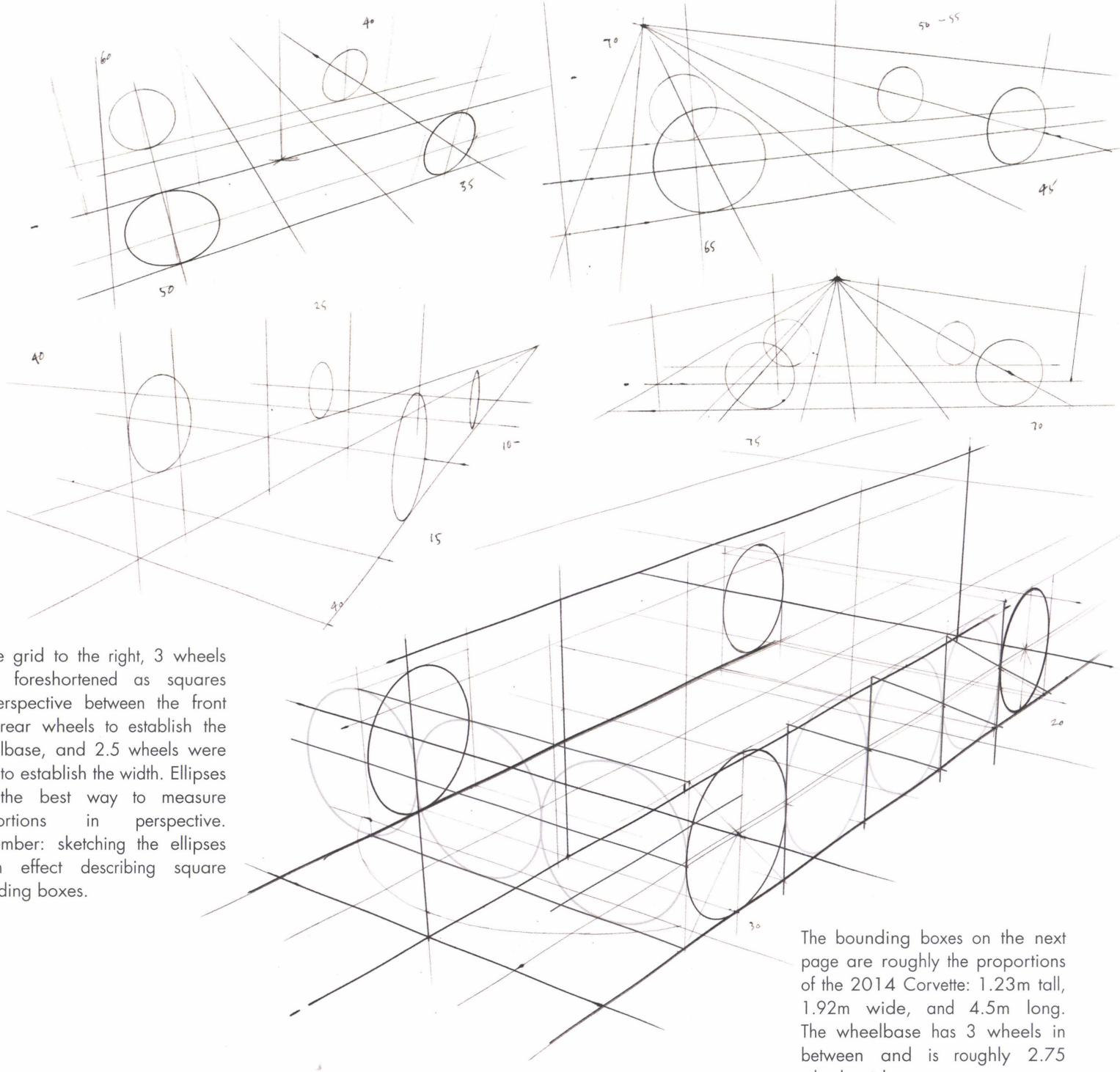

In the grid to the right, 3 wheels were foreshortened as squares in perspective between the front and rear wheels to establish the wheelbase, and 2.5 wheels were used to establish the width. Ellipses are the best way to measure proportions in perspective. Remember: sketching the ellipses is in effect describing square bounding boxes.

The bounding boxes on the next page are roughly the proportions of the 2014 Corvette: 1.23m tall, 1.92m wide, and 4.5m long. The wheelbase has 3 wheels in between and is roughly 2.75 wheels wide.

Below are a few perspective grids that were generated in MODO. (Another program that can lay out basic proportions with a perspective grid, that is relatively inexpensive or even free, is SketchUp). Notice that the wider-angle grids shown at the bottom of the page actually have some curvilinear lens distortion. Inside MODO and other higher-end 3D programs, this lens distortion can be added, but not in the more basic ones like SketchUp.

Look at the grids on this page. The top of each bounding box is positioned on the Horizon Line. This means that the eye level is the same with each camera and only lens length is changing. In this underlay, green grid lines define the ground plane, blue lines define the centerline of both the proportionally correct box and the wheels, orange lines indicate the minor axis of each wheel, and the black lines define the bounding box of the maximum desired dimensions of the car. A good way to set these dimensions is to do a little research and match the dimensions of an existing vehicle that is similar in size to the new design.

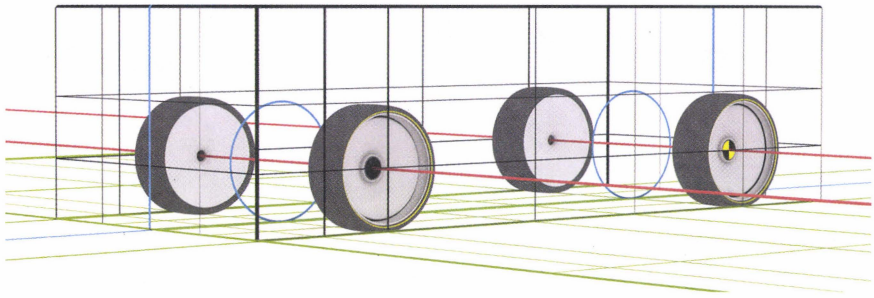

100mm lens

With the longest lens in these examples, a good amount of two of the sides of the bounding-box planes can be seen, but not much of the ground plane. Using this grid as an underlay would be simple, as the convergence left and right is quite slow.

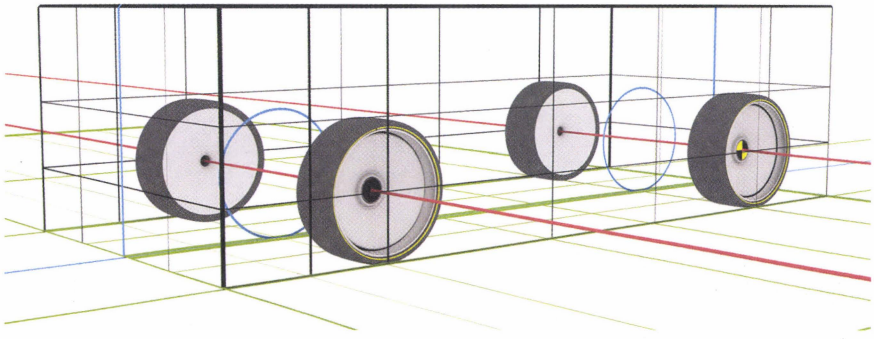

50mm lens

This lens is very close to the lens length of the human eye. It is the simplest grid to use because it feels the most natural.

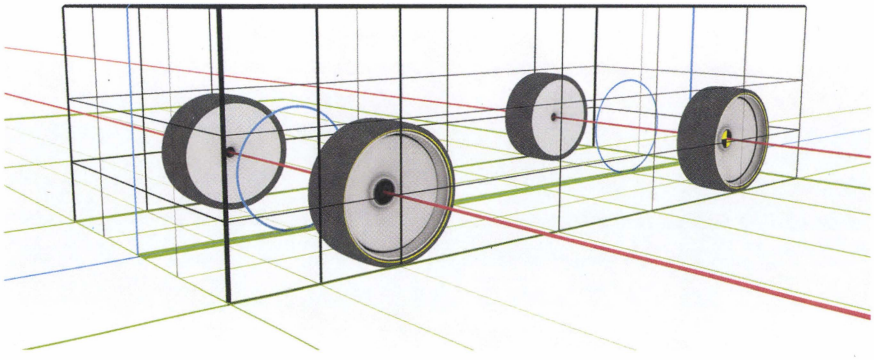

35mm lens

Using this lens feels like the observer just took a step closer to the vehicle and the sides of the box have become even more foreshortened. As the foreshortening increases, it becomes harder to guess at the proper foreshortening, so using the perspective guidelines becomes more important. Also a little lens distortion is showing up for the first time, slightly bending some of the straight lines.

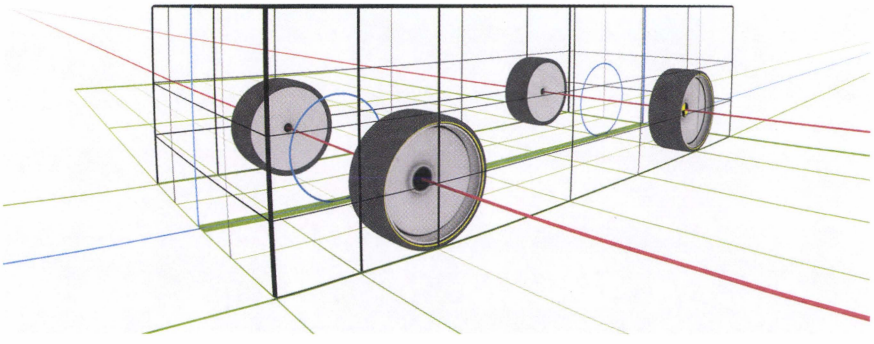

22mm lens

This is a very wide-angle lens with quite a bit of lens distortion. A lot of the ground plane can be seen, but the sides have become very foreshortened. Using this grid requires the most attention to the construction lines because much of the far side of the form is hidden from view.

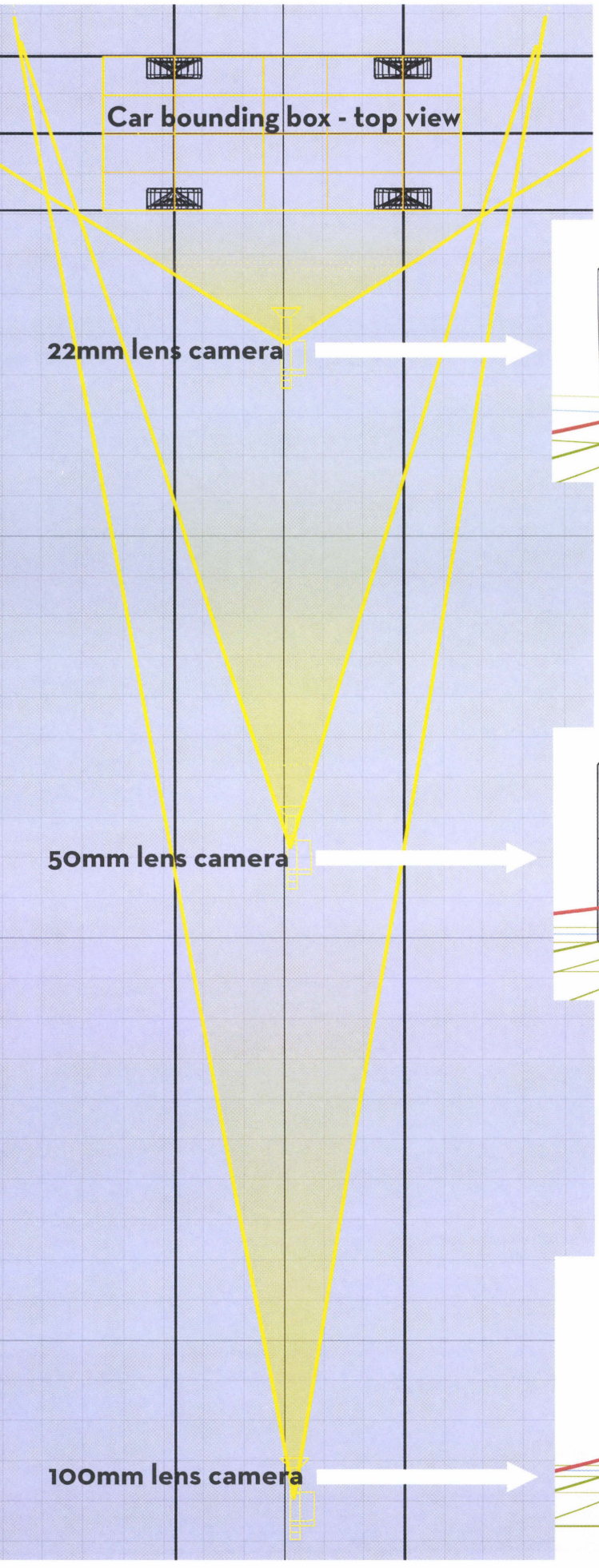

The graphic to the left shows the top view of the bounding box of the vehicle and the position of a camera with a 22mm lens. Below, the side view shows how the wheels are now ellipses and the blue centerline is very hidden by the nearside corners of the bounding box. When sketching a vehicle in a side view while estimating a wide-angle-lens perspective grid, the corners of the car are almost never representative of the true length of the car at its centerline.

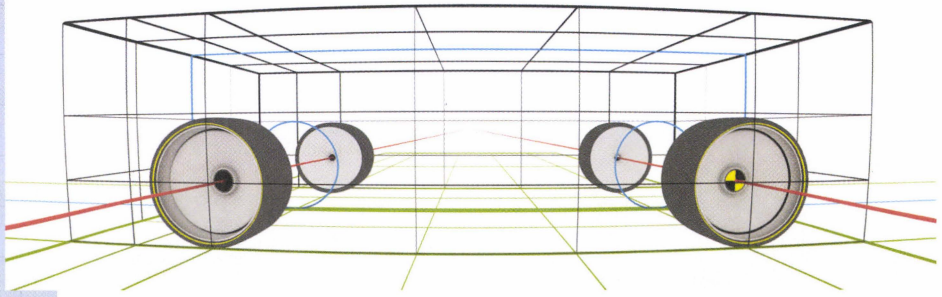

Below is what the perspective grid looks like through a 50mm lens. This one is shown with no lens distortion, unlike the wide-angle image. The blue centerline is getting closer to the corners and the wheels are nearly circles. When sketching with this kind of lens in mind, the Line of Sight might get very close to the true centerline, perhaps along the top of the car.

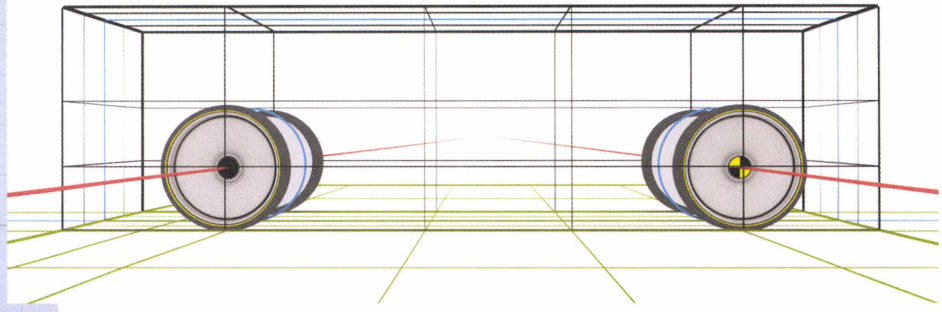

If trying to show as much as possible about the design in side view, then it should be drawn with a long lens and slow convergence or no convergence, thereby making it a true draft view and no longer in perspective. The norm in the automotive and entertainment industries is to work with a common abstraction of this side-view perspective.

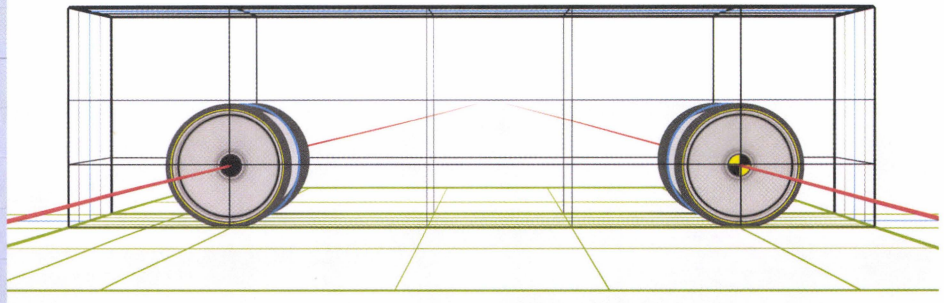

First, sketch a front or rear wheel. Next, draw the ground line and the second wheel, establishing the wheelbase. Third, lightly sketch a few reference guidelines to help get the height and front and rear overhangs correct if they are already known based on prior research. If this is a purely exploratory sketch, these extra guidelines can be skipped.

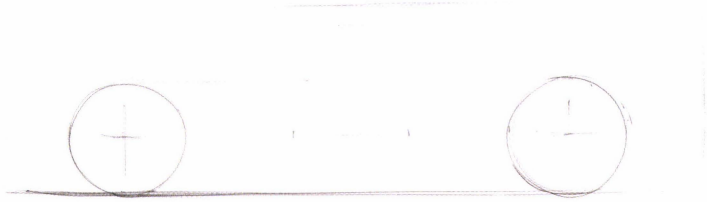

Make a perspective decision: long lens or wide angle. Set the Vanishing Point around the middle of the car and make a lens choice by choosing the width of the bounding box of the car body. Doing this on the ground, like adding a cast shadow, is usually easiest if enough of the ground plane can be seen, which depends on the placement of the Vanishing Point. Use guidelines from the VP to draw the rest of the bounding box and then locate the centerline by drawing an "x" somewhere across the bounding box.

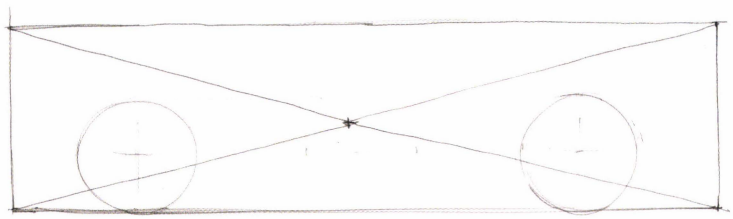

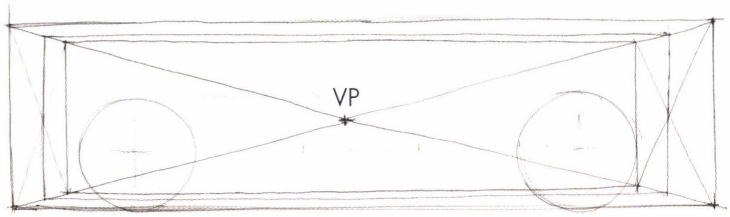

Draw the centerline of the car design and far-side wheels, using the guidelines going to the VP for help. Alternatively, the sides of the car can be drawn first, defining the front and rear corners before drawing the centerline. Just be sure you have all three—both of the sides and the centerline.

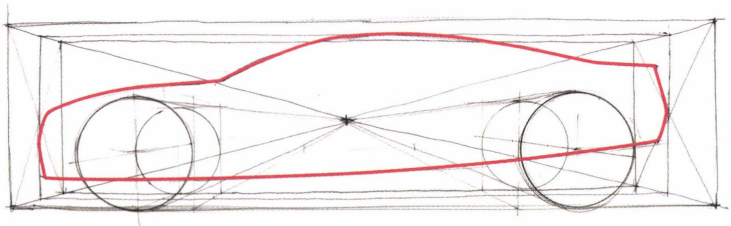

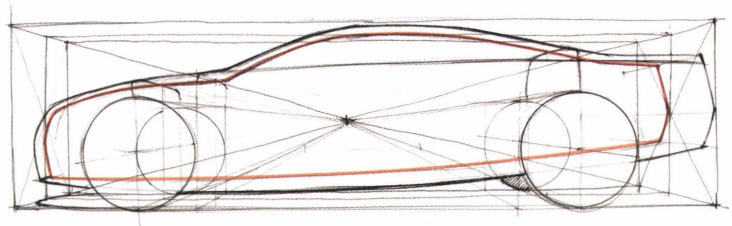

The last step is to detail the drawing by adding character lines to the body, the intakes, exhausts, windows, doors, wheel designs, headlights and taillights (if visible). By adding a few lightly drawn X- and Z-plane sections across the body, it can be determined how much of the top, front, and rear of the body will be seen. As shown on the opposite page, the camera lens chosen greatly effects how much of these planes, in addition to the side of the car, will be seen in this perspective view.

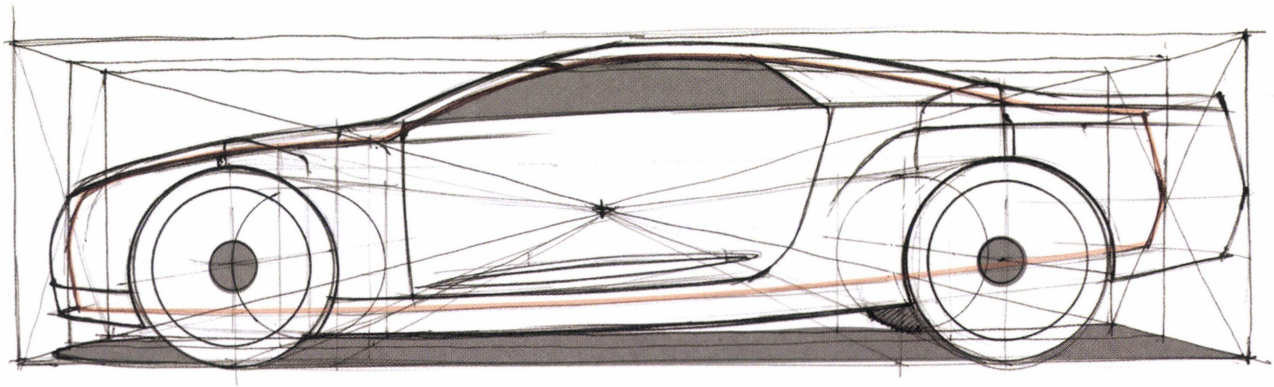

DRAWING A STYLIZED SIDE VIEW IN PERSPECTIVE

To abstract the side view for quick sketching, as commonly seen in the sketches by professional automotive designers, simply draw the body of the car as if using a long lens but then show more of the far-side wheels and ground-plane depth as if drawn with a wider-angle lens. This is a hybrid of what a car looks like in perspective and in a true draft view. Designers use this abstraction or stylization to give the sketch a bit of dynamism and depth. By showing more of the far-side wheels and casting a shadow on the ground plane, the drawing is anchored and has a bit of dimension. When drawing this stylized hybrid of the real perspective of an object, keep in mind that this is not a camera-lens effect; the only way the object will ever be seen like this is in an illustration. It is important to understand this concept when making the choice to stylize perspective sketches in this way.

- Silhouette sketched as a draft view conflicts with the perspective of the wheels and the shadow.

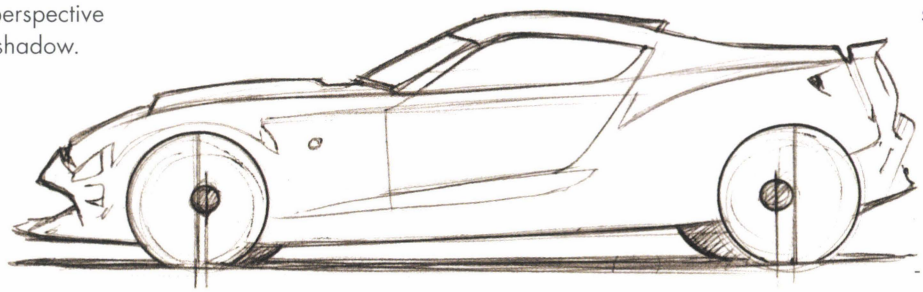

- No influence of the perspective X section visible.

- Wheel rims drawn as true circles and not ellipses indicate a true draft view.

- The thin ground-plane shadow indicates a low POV or a long lens. The far-side wheels and offset wheel centers indicate a wide-angle lens.

Another reason many professional automotive designers do not sketch technically accurate side views is because it takes more time. This hybrid sketch is a car designer's shorthand version of a more accurate side view. Professional designers know that side views like this are just a stylization and that they can never be built in real life. However, they have more visual appeal for the amount of time invested than the more technically correct ones. Again, it is a choice to decide what shortcuts and style to incorporate into the work. These types of sketches are fun to do, as they are quick, loose, and bring a lot of life to an object because they are caricatures of reality. On the opposite page, see four examples of the same car in side view rendered in MODO with 28mm, 50mm, 100mm lenses, and an orthographic view. The two stylized sketches below are like taking the wheels and ground shadow from the top rendering on page 171, and cutting and pasting them on the orthographic rendering at the bottom.

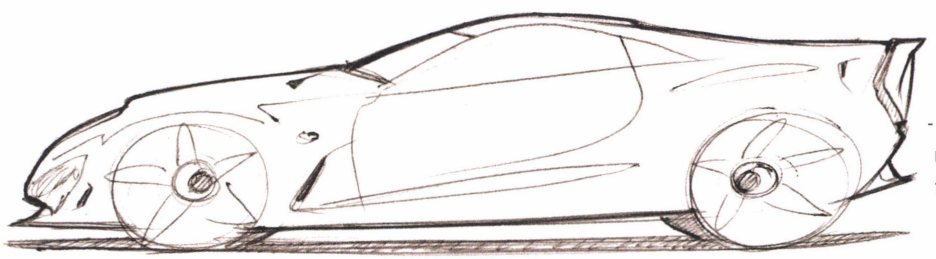

- Both of these sketches are so stylized that the wheels are not only not circles, but improperly aligned ellipses with the minor axis rotated 90 degrees.

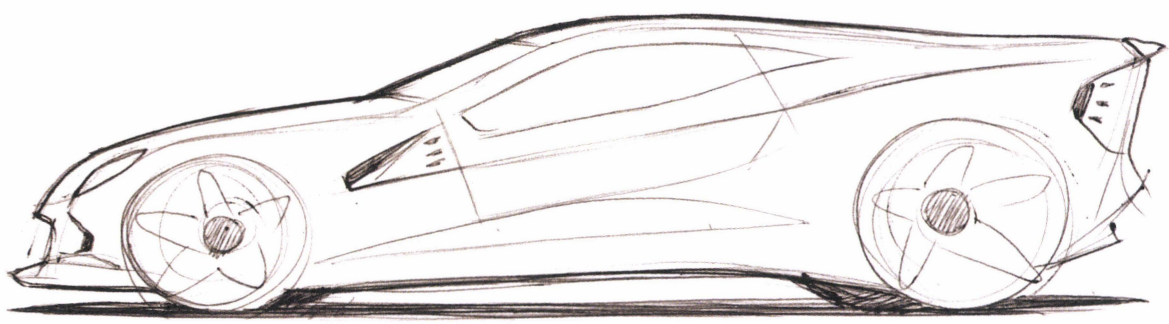

- The silhouettes are sketched as they would be seen with a very long lens, and the wheels and shadows are sketched with the look of a wide-angle lens.

28mm lens
50mm lens
100mm lens
Orthographic

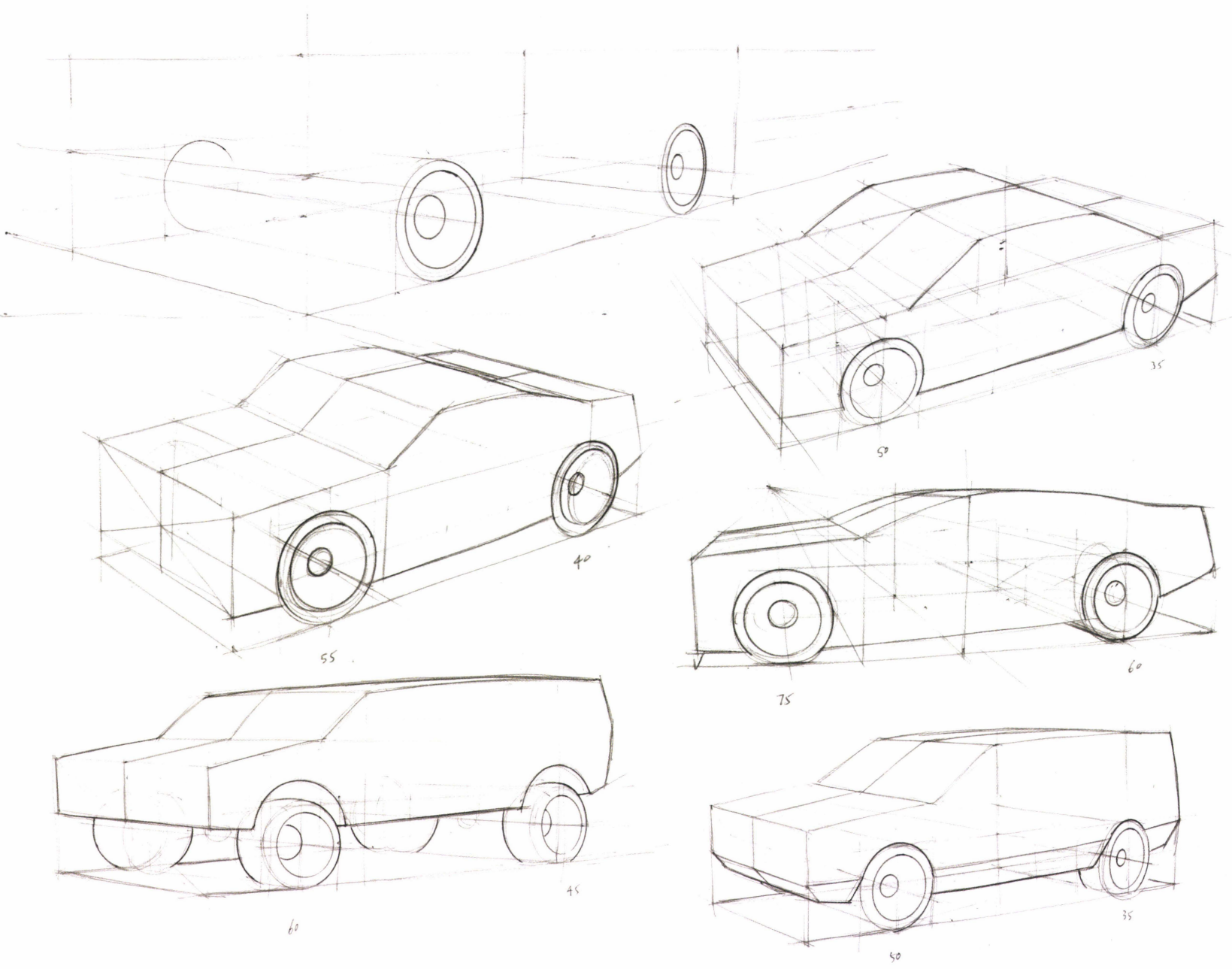

Now let's draw some vehicles. Of course, this means starting with the basics. At the very top of this page is the most important thing to practice at this point: wheels set in the proper perspective, and the relationship of the wheelbase to the width, along with a few guidelines to describe the view of the vehicle. Use an underlay or just go for it freehand-style with a little cleanup via ellipse guides, as was done for the sketches on both of these pages.

Start with some basic, boxy vehicle volumes and do not add any side, front, rear, or top surface sculpting yet. Simply focus on establishing the POV and drawing the ellipses along the correct minor axes in the proper degree. The numbers on the sketches refer to the degrees of the ellipse guides used to clean them up. Try all sorts of views and all kinds of side-views in perspective connected with straight sections across the front, top, and rear. If drawing a specific type of vehicle is the goal, try to get the overall proportions just right by referencing an existing example of that vehicle.

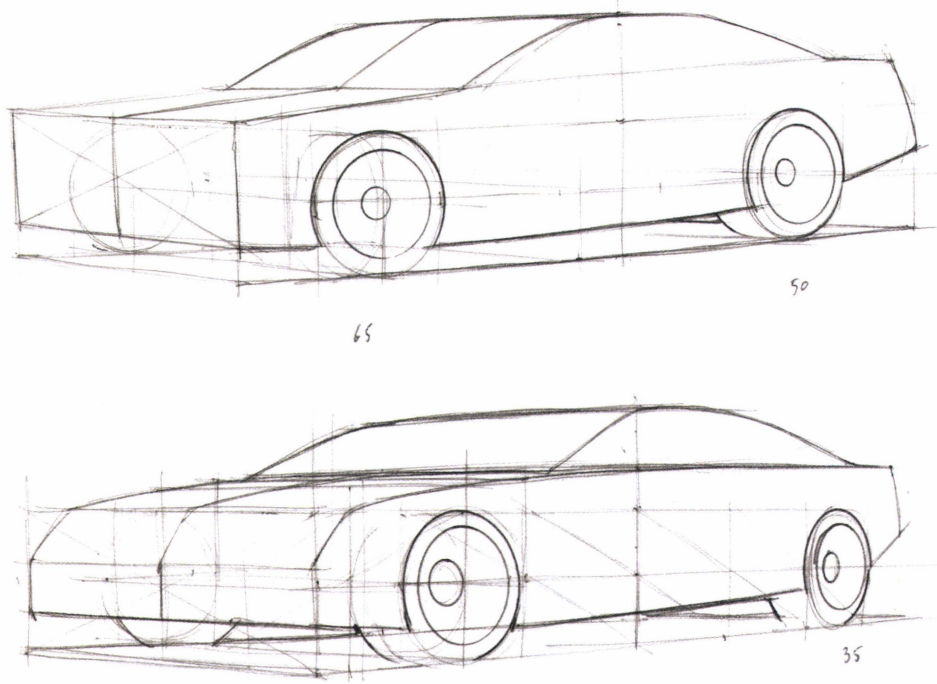

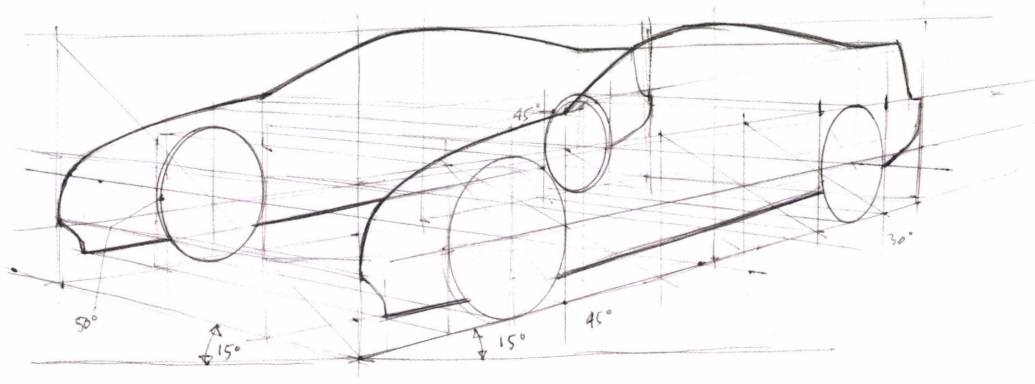

Pay special attention to the foreshortening of the centerline of the vehicle. A good way to do this is similar to translating the side view of an airplane onto a perspective plane. Draw a few reference lines as guides—using the wheels is a great way to do this. Pick a point relative to the front wheel that the A-pillar (a structural pillar at the front that defines the sides of the windshield and the front edge of the side window) points toward, for instance. This can be a good way to help draw the side view in perspective. Getting the overall height right along with the correct angle of the windshield as the view becomes more foreshortened is an important thing to practice before even worrying about adding the width across the top surfaces.

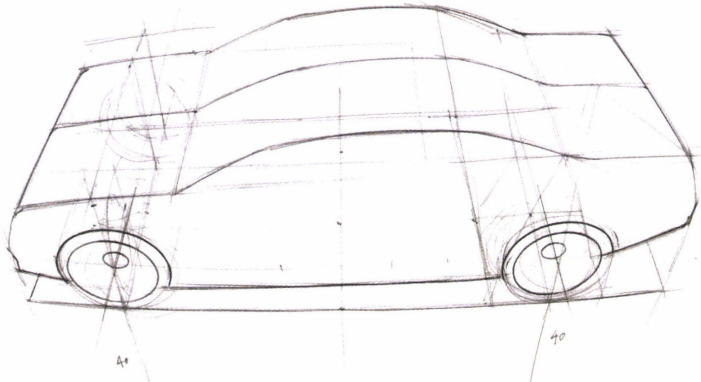

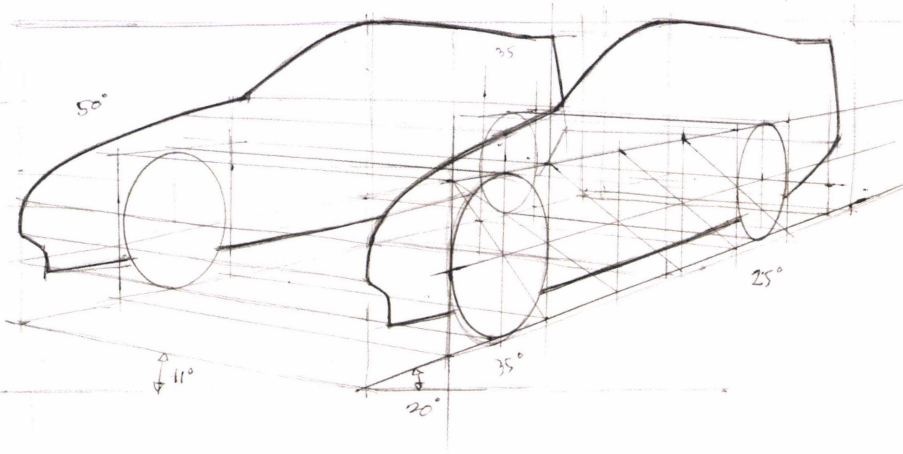

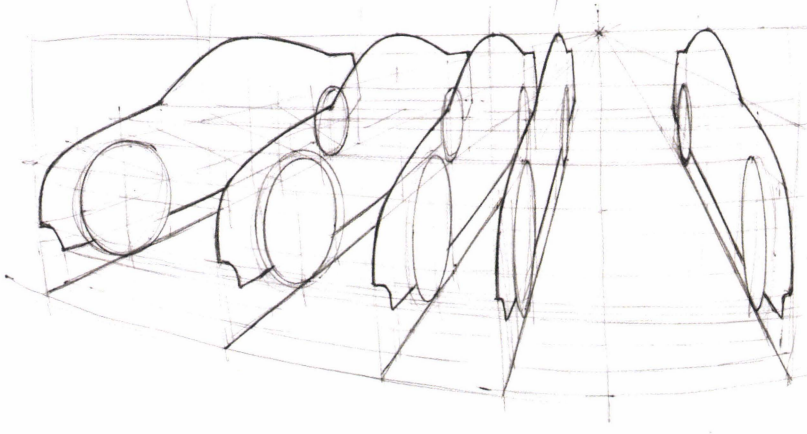

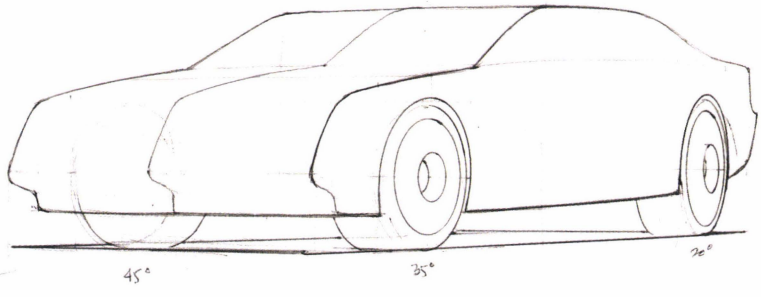

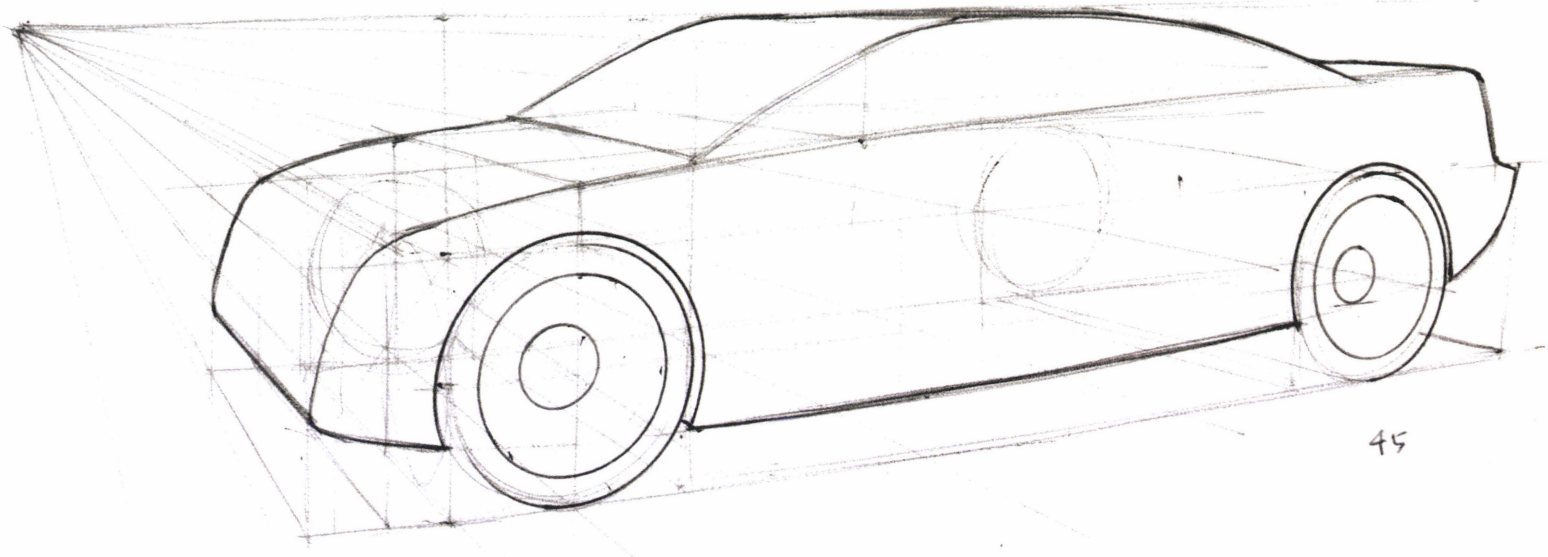

BASIC BODY SCULPTING

Sketches A, B and C all started just like the sketches on the previous two pages. After drawing foreshortened side views in perspective and connecting them straight across, one of the simplest ways to start to give a vehicle form is to adjust the centerline and make the X and Z sections between the sides of the vehicle something other than straight. Look closely at the sketches below, those first lines inside the more rounded forms can still be seen. After adjusting the centerline, the X and Z sections need to be crowned to go through it; resulting in more convex surfaces.

Drawing the greenhouse (windows and roof) is done basically the same way except for the tumblehome. Tumblehome is the angle at which the side windows of a car lean inward at the roof toward the center of the car. The side-view roof lines can be leaned inward to the desired width and resulting tumblehome angle. This will make the width between the A-pillars narrower at the top than at the base of the windows.

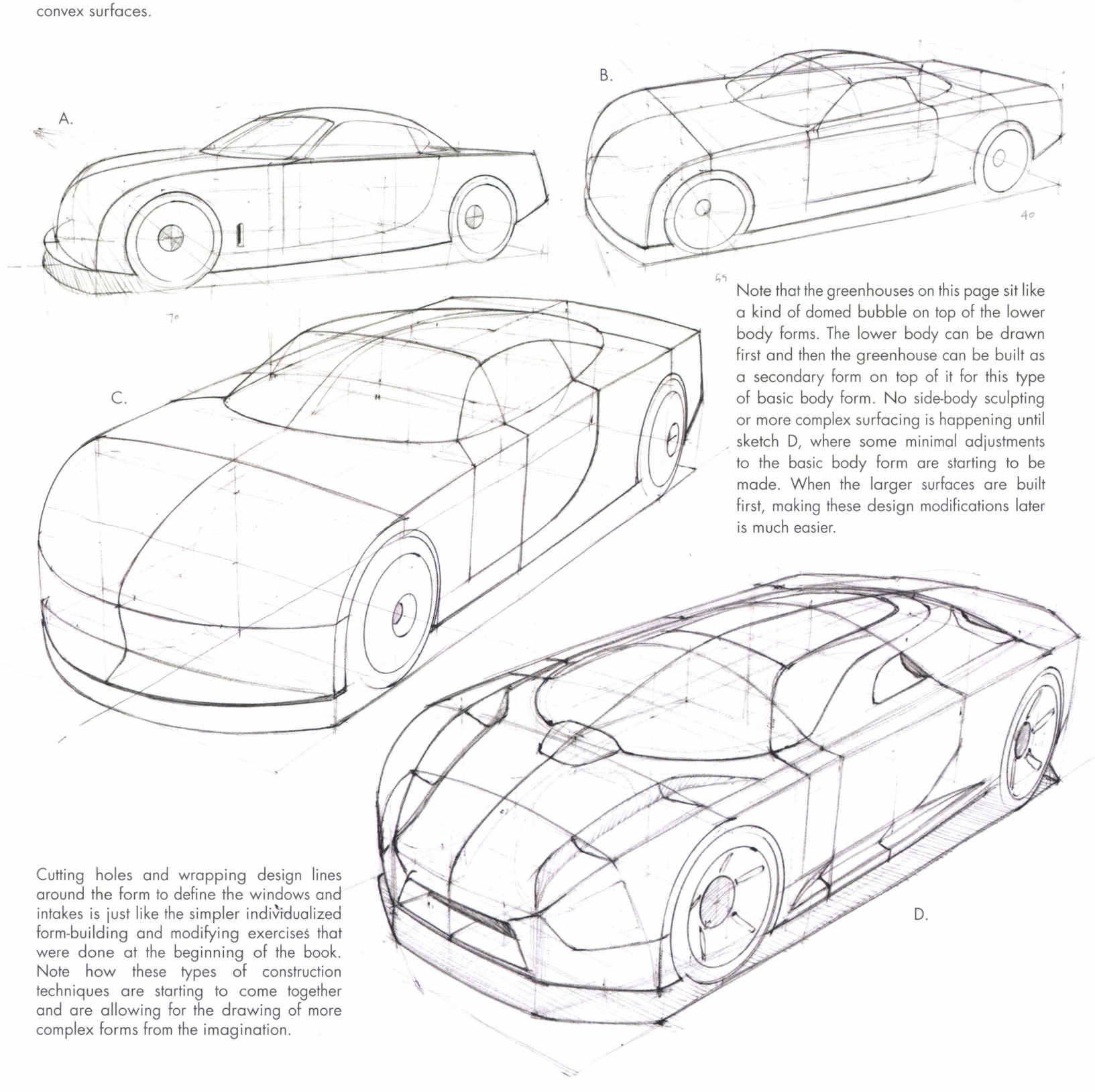

Note that the greenhouses on this page sit like a kind of domed bubble on top of the lower body forms. The lower body can be drawn first and then the greenhouse can be built as a secondary form on top of it for this type of basic body form. No side-body sculpting or more complex surfacing is happening until sketch D, where some minimal adjustments to the basic body form are starting to be made. When the larger surfaces are built first, making these design modifications later is much easier.

Cutting holes and wrapping design lines around the form to define the windows and intakes is just like the simpler individualized form-building and modifying exercises that were done at the beginning of the book. Note how these types of construction techniques are starting to come together and are allowing for the drawing of more complex forms from the imagination.

DRAWING THE WINDSHIELD AND GREENHOUSE

There are two simple ways to approach the perspective construction of the windshield and the rest of the greenhouse. Either work from the outside in, leaning in the vertical sides of the greenhouse and adding the tumblehome, or work from the inside out, drawing the centerline and then adding a few X sections to define the tumblehome angle.

On the image of the light blue car, three lines have been highlighted in yellow, orange, and red. These three lines are very common on passenger cars; learning to balance them and draw them accurately will go a long way toward making cars look real. The yellow line is often called the roof line; it starts by running up the A-pillar and then continues to define the edges of the roof and transitions down into the trunk, where, in this case, it keeps on going to the rear of the car. The orange line is called the belt line; this is the intersection of the greenhouse forms and the body of the car. The red line shows the shoulder or fender line.

The white car shows a more modern interpretation of these three lines, where the roof and belt lines extend over the entire length of the car and the A-pillar has been heavily blended into the hood sections. These types of lines on a vehicle are commonly called character lines.

For the silver car, notice the tumblehome angle defined by the yellow lines. Usually the sportier a car is, the greater the tumblehome its greenhouse has. Also, look at the red line defining the belt line of this car's greenhouse. A good way to construct it would be to draw this belt line on top of the body form and then add a couple of X sections and a Y-section centerline, which would determine the the silhouette. Then wrap the window shapes on the resulting surface.

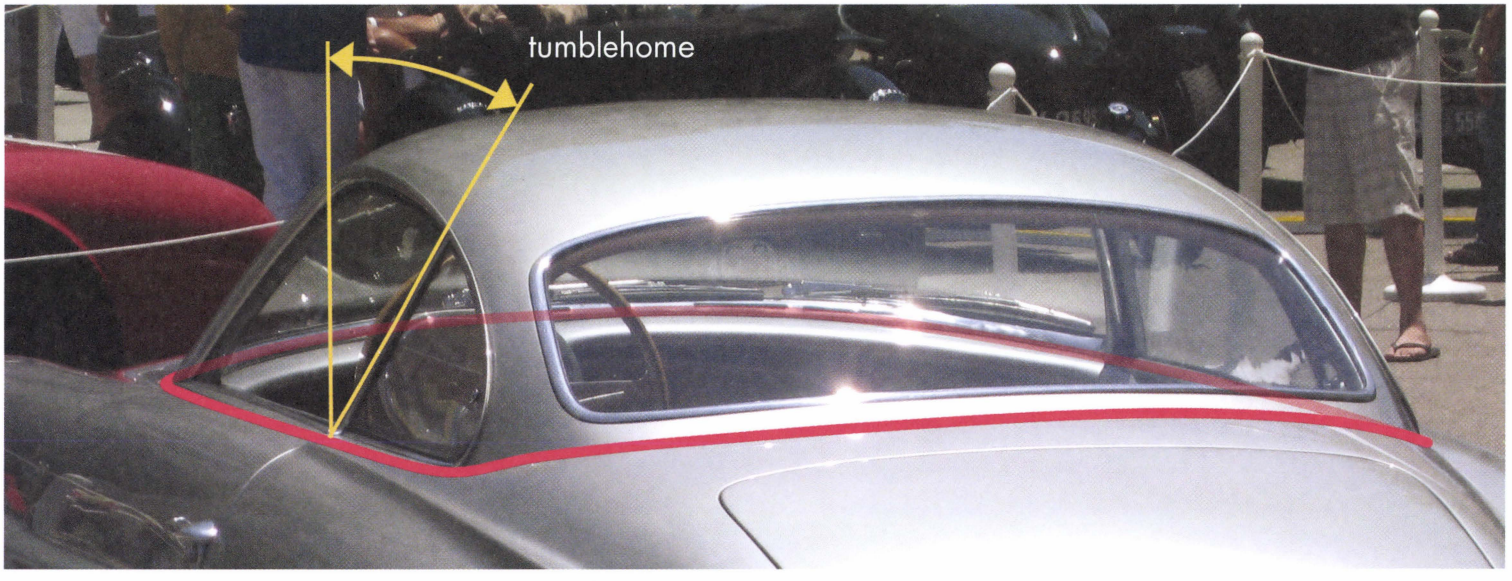

WHEEL WELLS, WHEELS AND TIRES IN PERSPECTIVE

To make a vehicle look real, give the wheels room to move. On most cars, the rear wheels only swing up and down without turning, so the wheel wells around the rear tires can be a bit lower than the front ones.Front wheels require more vertical space because they go up and down in addition to turning. This movement of the wheels due to the suspension is called jounce. High-performance road vehicles like sports cars have stiffer suspension settings, so the wheel wells can be closer to the tires. The opposite is true for off-road vehicles, where the suspension allows for a much greater range of vertical wheel travel.

The hardest thing about drawing proper wheel-well openings is predicting how the side-body sections influence the forms of the wheel-well openings when they intersect. The easiest way to do this is to imagine an extruded horizontal cylinder (or whatever the wheel-well shape looks like from the side view of the car), extending outward from a starting position just inside the inner plane defined by the tire itself. Intersect a few well-placed section lines of the vehicle side body with a few section lines on the extruded wheel-well form. The intersection of these two forms will result in the wheel-well opening on the vehicle side body. Practicing this construction will lead to better guessing at sketching a proper side body/wheel-well opening.

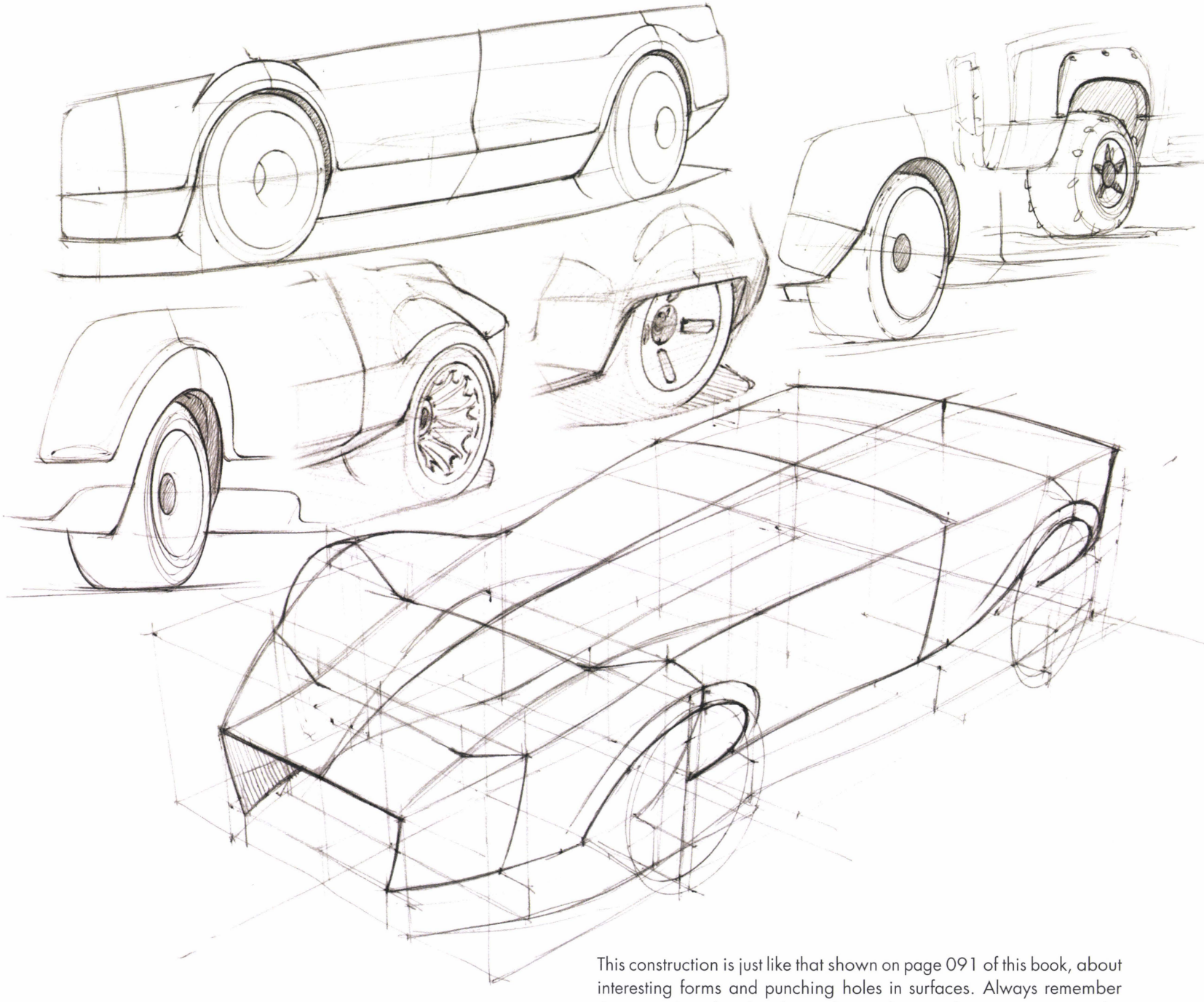

This construction is just like that shown on page 091 of this book, about interesting forms and punching holes in surfaces. Always remember that even though only a line is being drawn, what it represents is the intersection of two surfaces.

COMMON AUTOMOTIVE LINES

Do some observational sketches of modern passenger vehicles in order to learn just how many character lines are actually on a car's surface and how so many of them enhance each other with harmony and proportional sensitivity. Becoming accustomed to drawing these is necessary if the goal is to design unique, modern-looking vehicles. Below is an example of the 2-curve combo (red lines) that was explained on page 089. These two lines are common to many of today's cars, and even many cars throughout history. They start on the front of the car, become design lines on the hood, curve to define the lines of the A-pillars and the sides of the roof before continuing down the side of the C-pillars onto the trunk. (Pillars hold up the roof of a car and are referred to in order by letters, A, B, C, etc. with A being the first one at the windshield, B the second and so on). In the past, these two lines would most likely not have blended into becoming the pillars and the roof, but would have stayed lower, defining the belt line. These lines coming out of the hood and trunk, up the pillars, and onto the roof reflect a more modern interpretation of how a designer can make subtle refinements to the common lines that make up an automotive body, in order to achieve the style variations the market demands. Sketching modern, real-world styling variations that are unique creations will require practice and developing a sensitivity to the balance and harmony of all of these lines that define the form of the modern car body. This can be achieved by understanding and practicing perspective-drawing skills and then, as those improve, by drawing more and more complex forms.

Most car bodies are big boxes that have been manipulated over years and years to present a volume of surfaces that extend the brand appeal of the manufacturer. The designer of these very refined skins must consider all of the automotive engineering constraints (of which there are many) while exploring the silhouette, proportion, stance, graphics, details, transitional forms, materials, colors and textures of a new design. That is a lot to think about while doing a single drawing! More realistically, think of the sketches as working drawings that can be endlessly modified and refined with overlays until the styling starts to fit the design brief (or narrative, in the case of video games or movies).

With every overlay and design study drawn, the same basic perspective skills learned in this book will be employed. As those perspective skills improve, the brain will have more space to think about design rather than perspective constructions, and the initial sketches of the objects being designed will start to look more attractive.

One line with many bends

The yellow line echoing the dark roof line is calling attention to how this roof line starts on the front of the car, moves onto the hood, then up the A-pillar onto the roof, down the C-pillar and onto the trunk before wrapping down the rear of the car. When drawing this type of line, imagine it as one awesome 2-curve combo and mirror it to the other side.

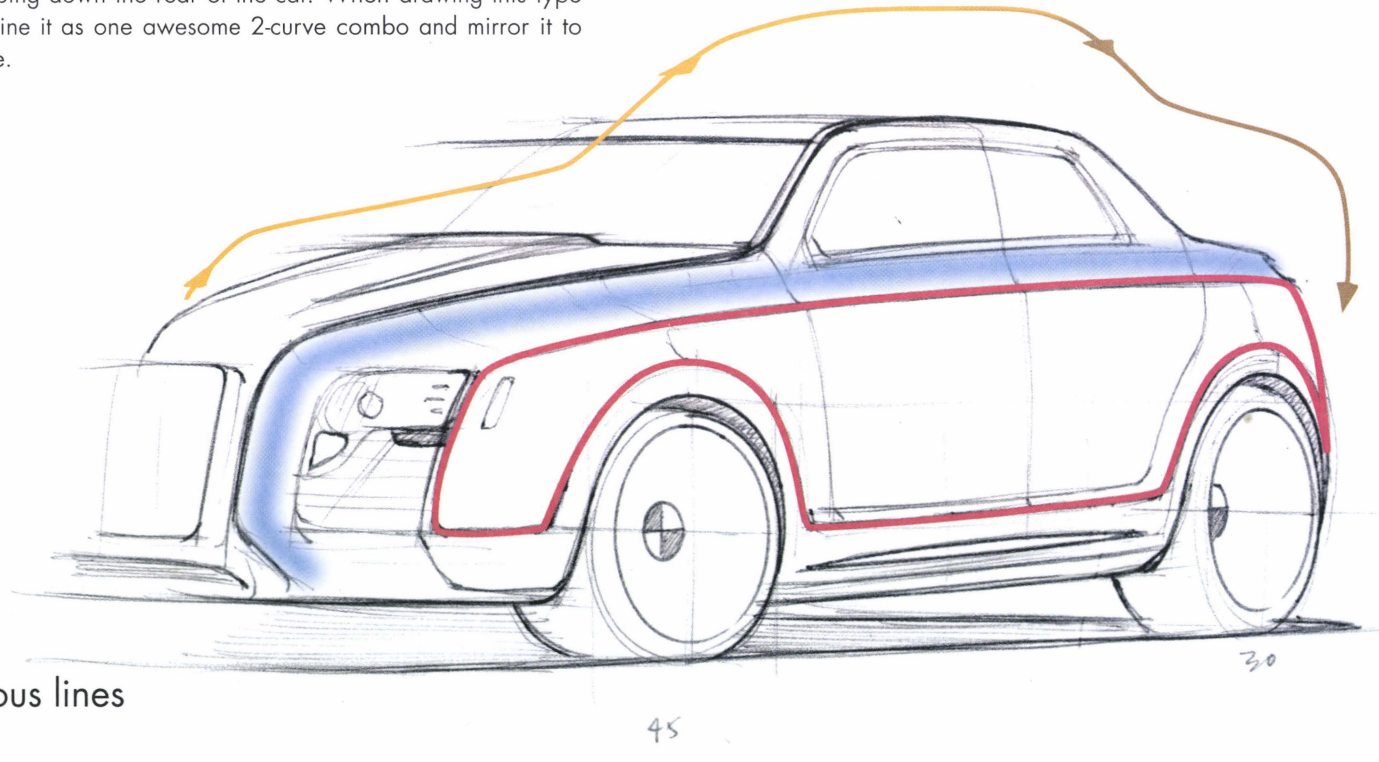

Continuous lines

Observe the three major lines that define the largest volumes in this car sketch: the dark roof line echoed by the floating yellow line, the soft blue belt line that blends the form of the greenhouse into the side body, and the side-body line in red that defines the shoulder, corners, wheel-well arches, and the lower part of the body (also known as the rocker area). These continuous lines that wrap all over the skin of the car in very controlled ways can be seen on a lot of German cars, especially on something like the 2014 Volkswagen Jetta. Even if the car has softer transitional radii and fillets with no hard-edged visible lines, the lines are still virtually there. What this means is that before you ever add a radius to a surface, be sure that the surfaces being blended together are as true as can be. If they are defined with hard edges first, evaluate the lines created by those intersecting surfaces and then add the fillets or radii off the edges with more confidence. This type of perspective drawing is very much like making a physical model, whether the volume is built out of clay or cut out of a block of wood on a band saw. Start by perfecting one draft view at time and add the transitional forms last.

CAR DRAWING CONSTRUCTION, STEP-BY-STEP GRID

First, create an accurate perspective grid. Using a 3D modeling program like MODO, create a bounding box with the proportions of 1.92 wide x 1.23 tall x 4.5 long. Position a 50mm camera at a POV where the top of the box lines up with the Horizon Line. Next, place a protractor on the computer screen and move around the view of the box a bit until simple alignments are found that can be easily recreated by hand in the following steps.

1.

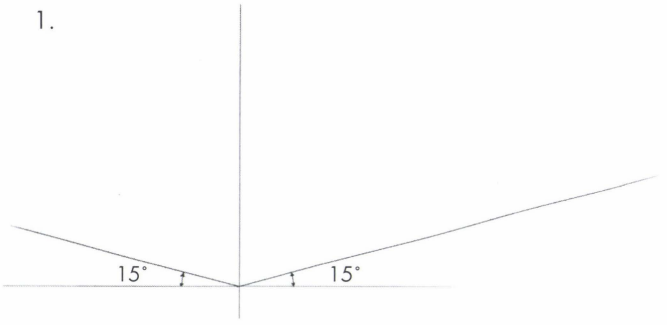

1. Draw a vertical and a horizontal line. At the intersection of these lines, draw two lines at 15° from the horizontal line, creating the bottom-front corner of the bounding box.

2.

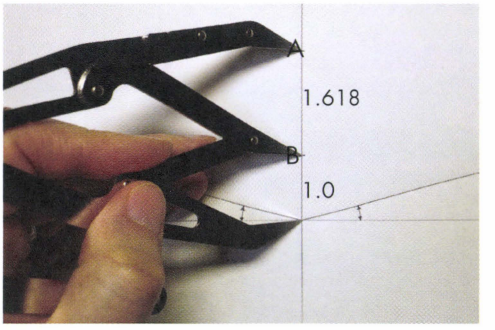

2. Divide the vertical line by the proportion of 1:1.618, the "Golden Ratio." Dividers with this ratio can be purchased or simply made if you find yourself wanting to divide distances often at this ratio.

3.

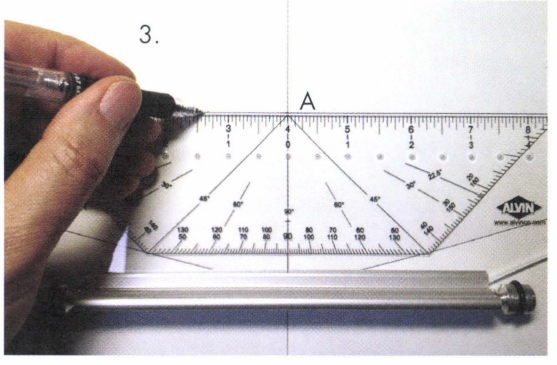

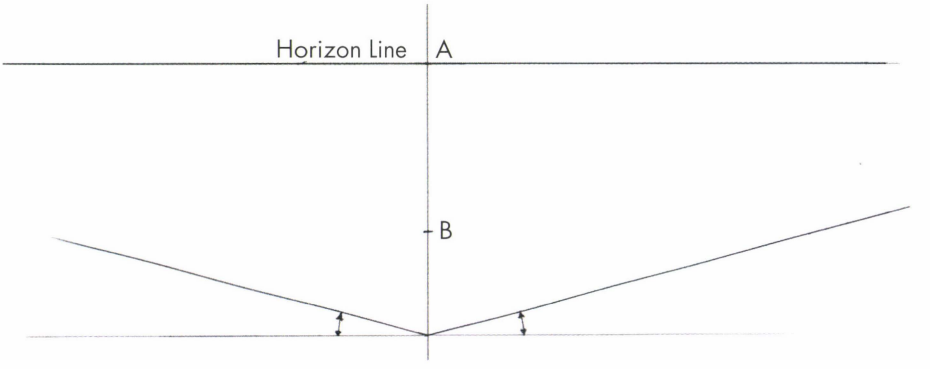

3. Place a Horizon Line at the top point (A).

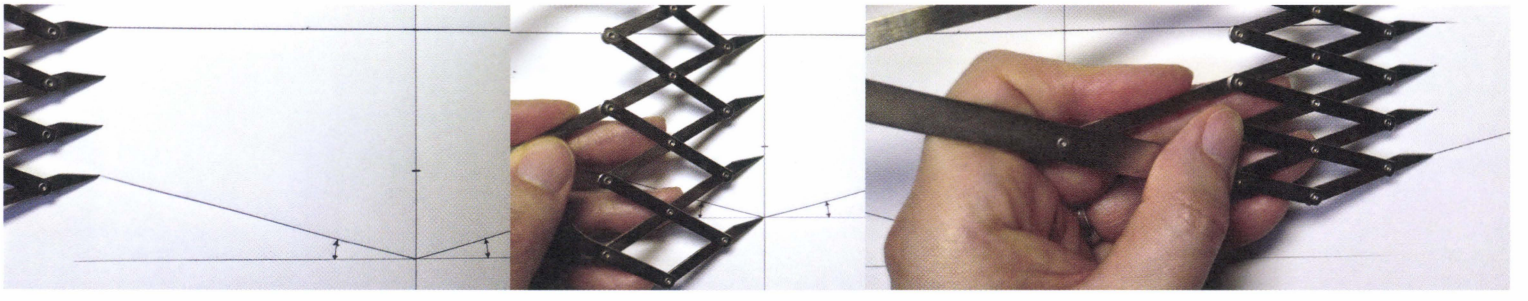

Equal Spacing Divider

To add more perspective guidelines to this grid, equally divide the vertical height lines using an equal spacing divider, as shown above. This tool makes it easy to divide equally the vertical distance between the Horizon Line and the lines converging to the LVP and the RVP. Mark the division points at the far left of the sketch, on the vertical line near the center that defines the front corner, and at the far right. Once each of these distances is divided equally, new converging guidelines can be added.

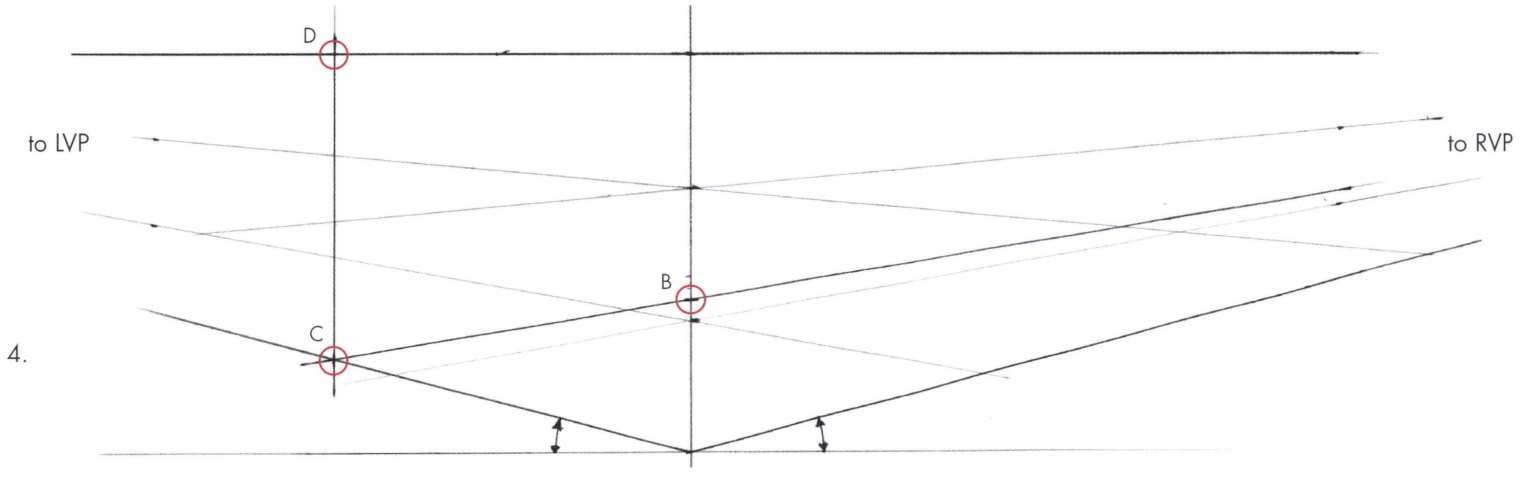

4.

4. Use the new guidelines for reference and draw a new perspective line from the RVP through point B, which was the lower point in the Golden Ratio dividing step. By extending this line, point C is created at the intersection of the bottom line going to the LVP. Draw a vertical line from point C to create the far side of the front of the bounding box with the proportions of 1 tall x 1.56 wide.

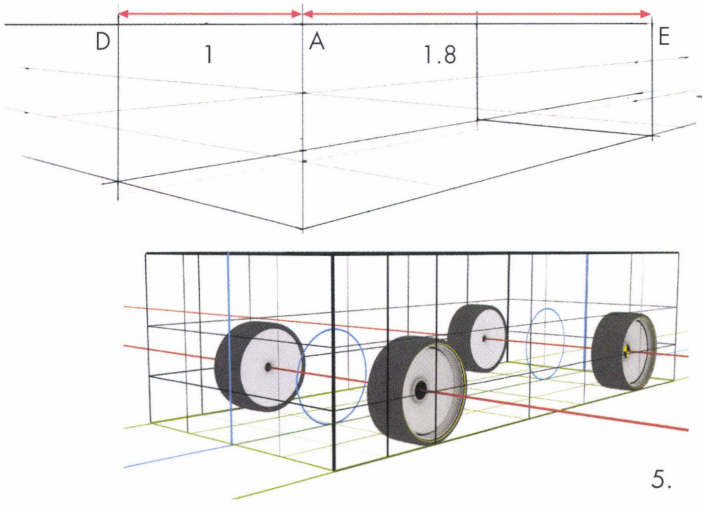

5.

5. To find the length of the bounding box place a point (E) on the Horizon Line that is 1.8 times the actual measured width from the front corner (A) to point D, (see above). Draw through the bounding box and use the guidelines to find the back corner.

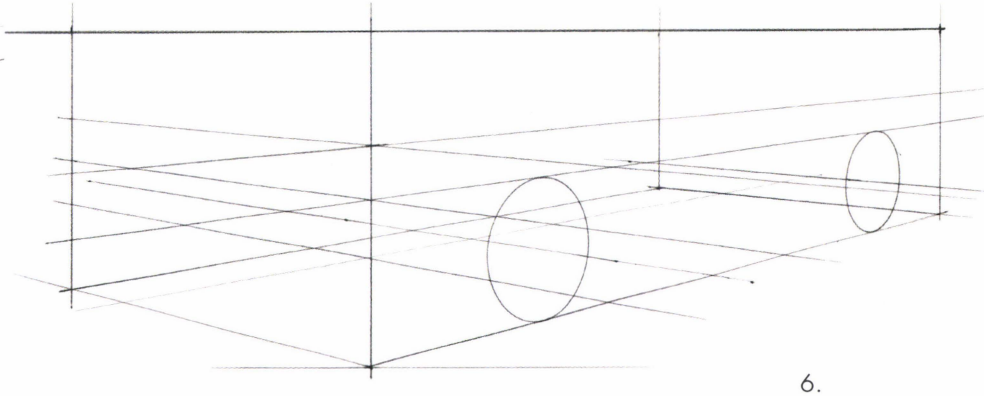

6.

6. Add wheels to the longer near side of the bounding box. Notice this bounding box is in 2-point perspective, compared to the 3-point computer-generated grid that it came from. This simplification was done to make the construction of the grid easier by taking out the convergence of the vertical lines. By the way, this bounding box is about the proportion of the 2014 Corvette.

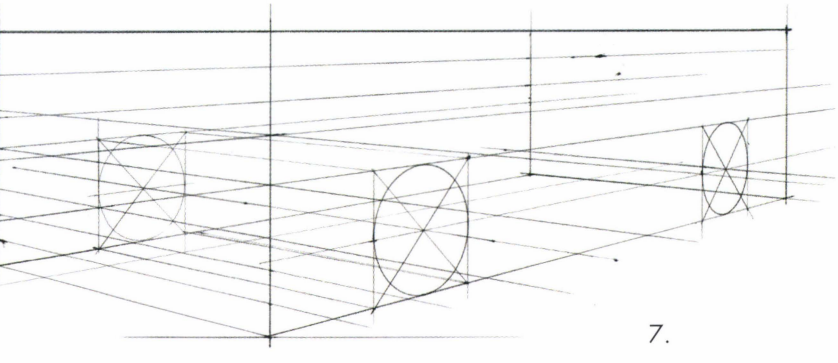

7.

7. Draw perspective boxes around the nearside wheels to double-check that the degrees of the ellipses are correct. Then, transfer these nearside perspective squares to the far side of the bounding box. The newly created perspective squares are automatically the proper degree of the ellipses.

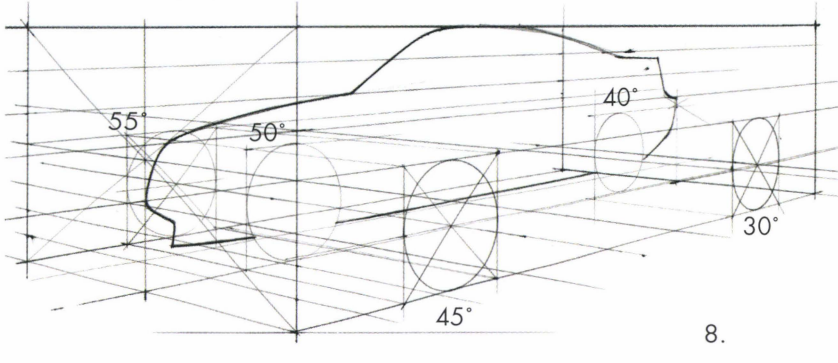

8.

8. Use the nearside perspective squares to find the size and degree of the ellipses located on the centerline of the car. After placing the wheels on the centerline plane, use these wheels to help draw the centerline of the car. Now is the right time to make adjustments to the overall proportions of the car, to the centerline and to the placement of the wheels, before more sections are added making changes more difficult.

9.

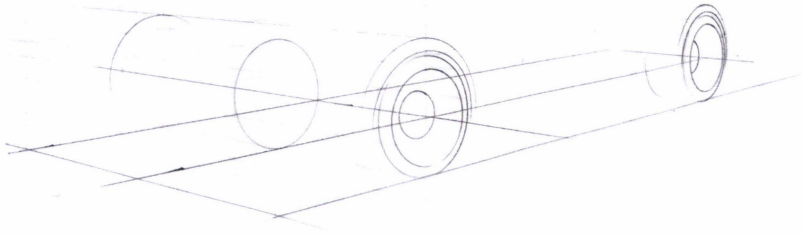

10.

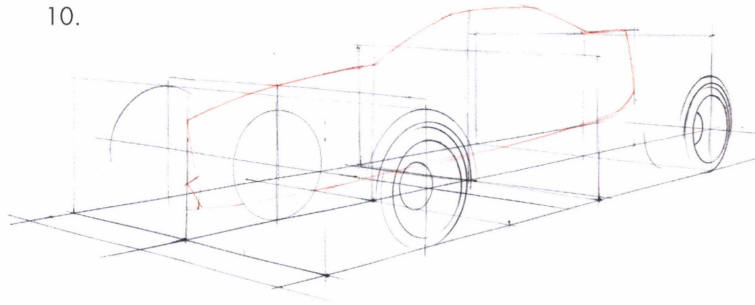

9. Use the grid from the previous page as an underlay to build up a car form as accurately as possible. Start with the wheels, since so much of the car's body is sensitive to the proportions established by them. Here, not only were the tires and the wheels sketched in during this step, but also the wheel wells and even the start of a design line, mirroring the wheel wells.

10. Like step 8, lightly sketch a front wheel on the centerline plane to use as reference when sketching in the centerline of the car (red line).

11.

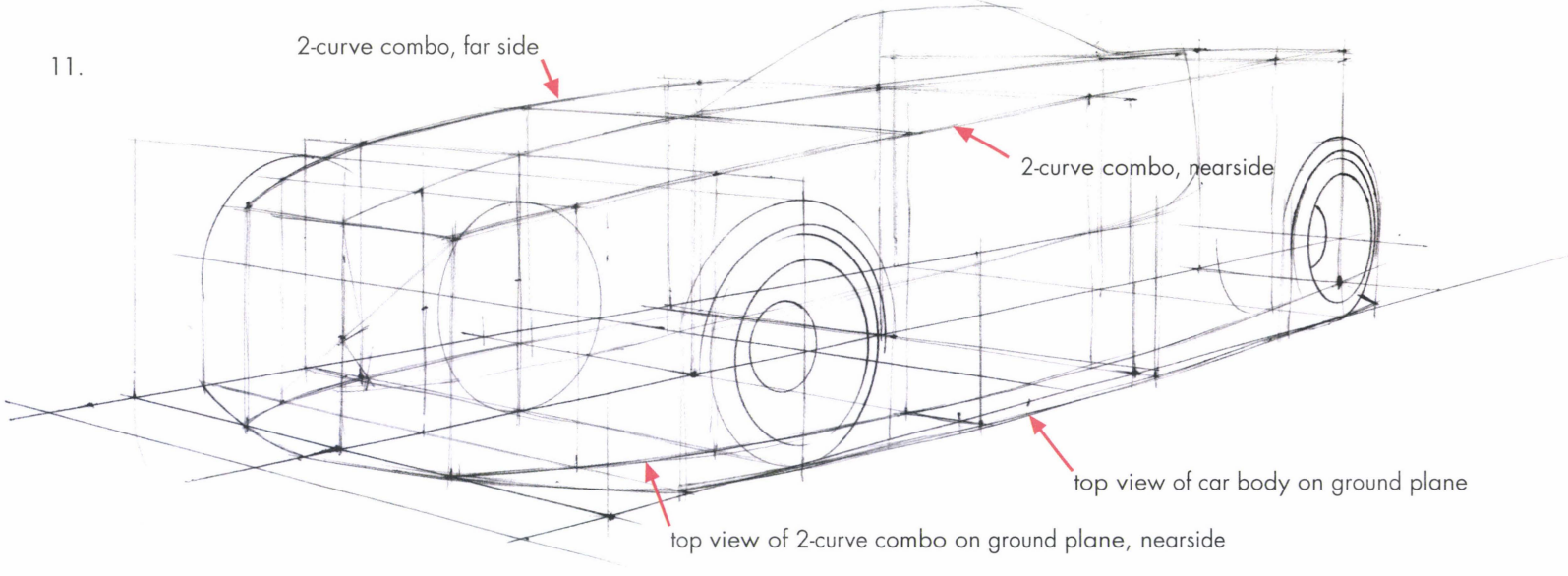

11. The construction of the car body for this demo happens to be an inside-out, section-drawing exercise, (instead of drawing the sides first and then extruding them across). Above is a basic 2-curve combo construction, introduced earlier in the X-Y-Z section drawing chapter on page 089. There is a visible top view of the 2 curves on the ground plane, and the perspective lines are a projected combination of those lines and the side view from step 2. There is also a top-view curve on the ground plane that represents the widest part of the nearside top view. Note that this top view encompasses the top view of the tires as well. This sketch is the 1:1 scale at which it was drawn. This scale is fine for basic constructions, but to add details like the headlights, the grill and the wheels, it is a good idea to enlarge those areas of the drawing via a copy machine and then do an overlay. At this size, those types of detailed areas of the car are too small to construct accurately. Keep in mind, these perspective constructions are working design drawings and are expected to be worked over as many times as it takes to refine the design into one that satisfies the design goals.

12.

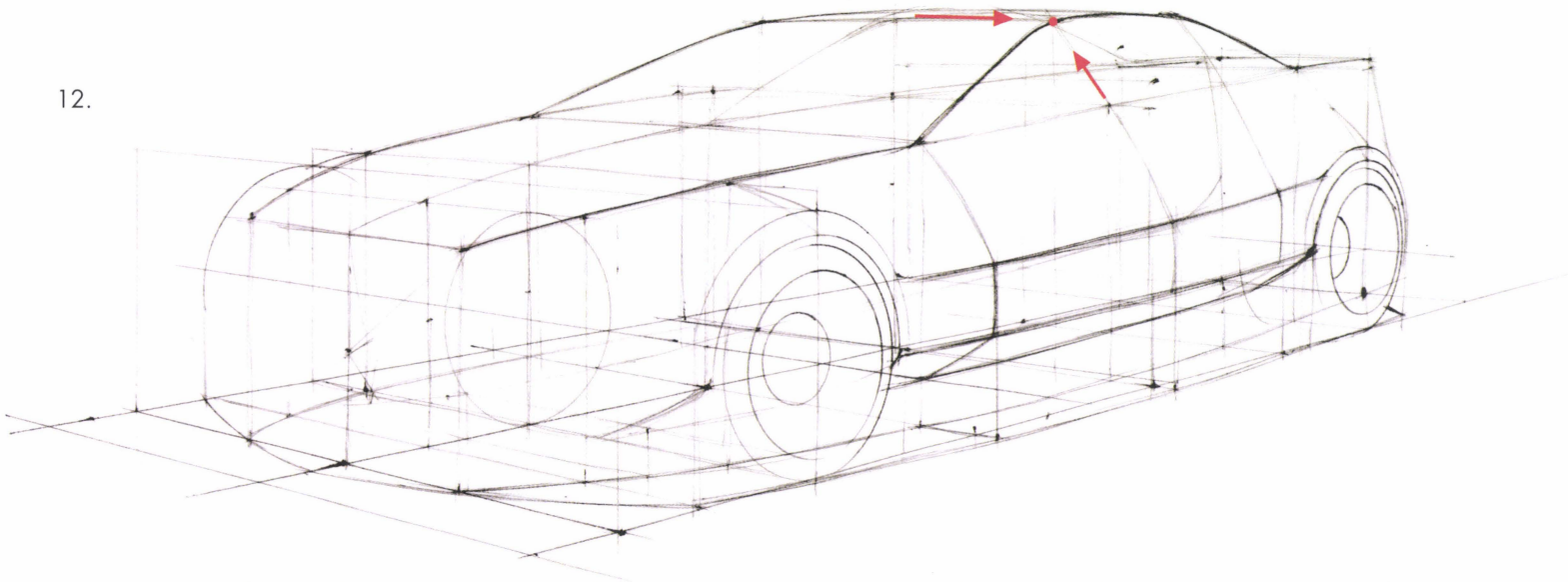

12. Draw the roof line and the A, B and C-pillars by drawing the X sections of the side body of the car and then extending them up until they intersect the centerline projected outward, indicated by the red arrows. The projected centerline defines the side view. The X sections define the tumblehome, which is the angle of the side glass as the surface leans in toward the centerline. Having the X sections define the width at the base of the windshield and at the top makes getting the taper of the windshield much easier. Incorrectly drawing this taper due to the tumblehome's influence is a very common mistake, so just use an X section placed at the top of the windshield and one at the base to figure this out. Mirroring the X sections to the far side can be done in any way at this stage: diagonals, boxes, guessing, etc. Also note that the X sections are intersecting and influencing the shapes of the wheel-well cutouts.

13.

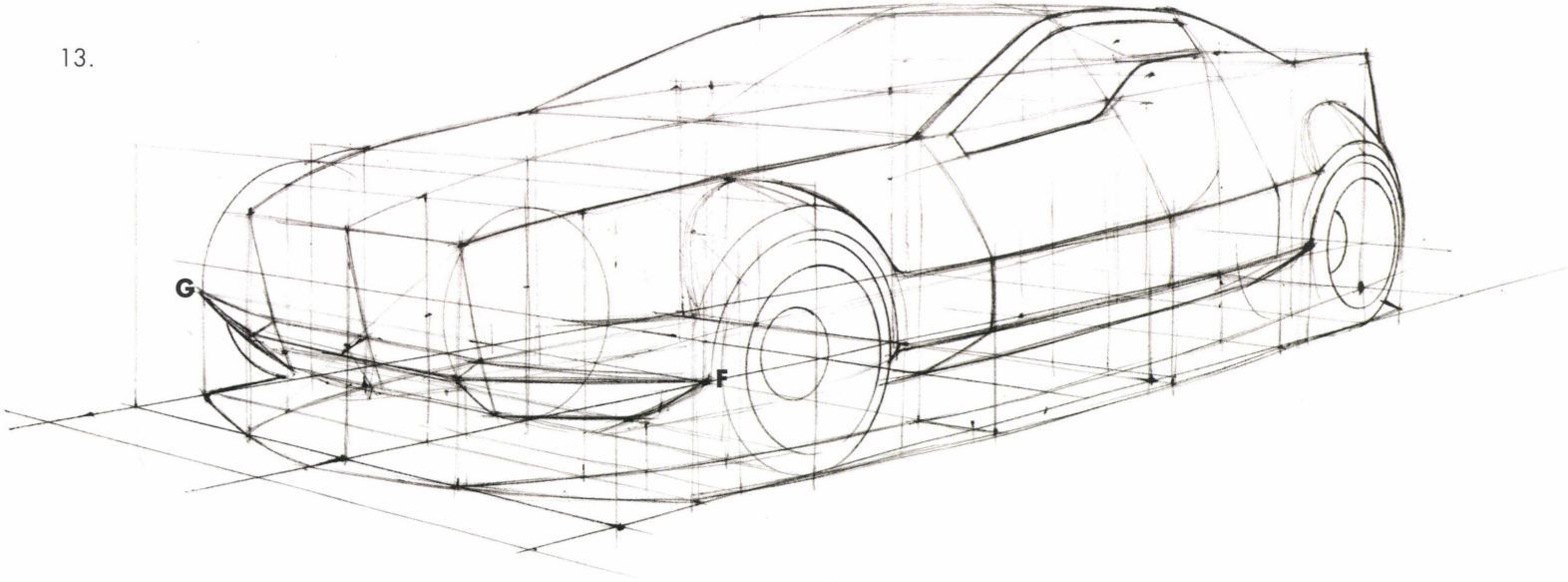

13. Add the first Z-plane section across the full width of the car at the front. The construction starts with a straight perspective guideline going from wheel well to wheel well to the LVP, (F to G). Then add the top-view sections of the Z plane to extend that small ledge that is starting to show up. Once the front of the 2-curve combos have been defined, the volumes from there to the front of the wheel wells can be added. This car body's side sections, if extended into the top half of the wheel wells, would cut them toward the centerline at the top of the wheel-well arch. To stop this from happening the wheel-well arches need a new surface that connects and blends them with the side body sections. Constructing these new surfaces to hide the tops of the tires is just like the projection of any curve onto a surface, except this time it's not a straight projection but more about projecting the curve of the wheel-well lip up at an angle into the side body and then blending the two forms with a fillet. The side window shape was also added. Notice how it echoes the A-pillar and roof line before dropping down the side body to define the lower line of the window graphic. Think about the internal structures of the vehicle when adding windows and door cuts, where they might be, and how thick they need to be in order to be strong enough. Adding these small gaps and thickness to the drawing makes a vehicle start to appear more realistic.

14.

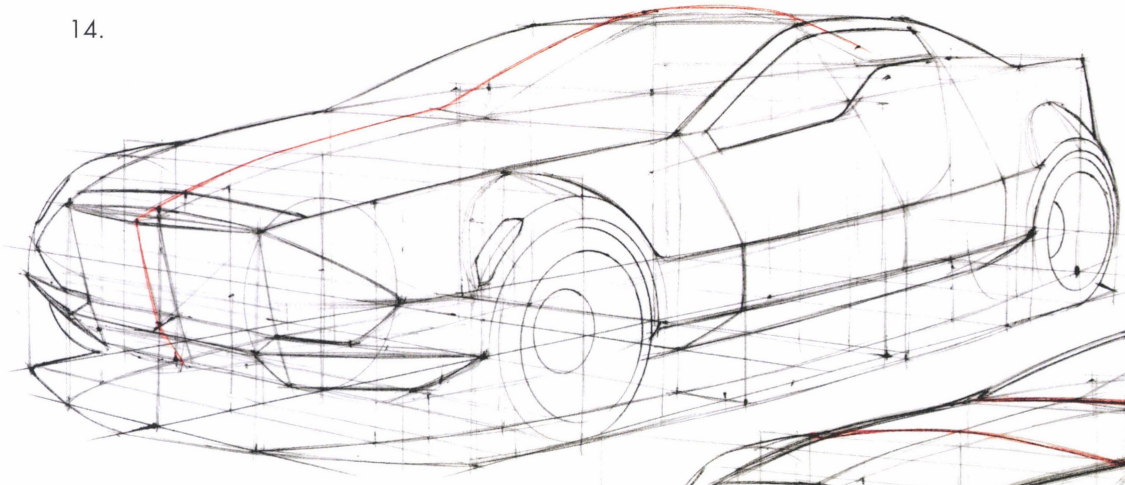

15.

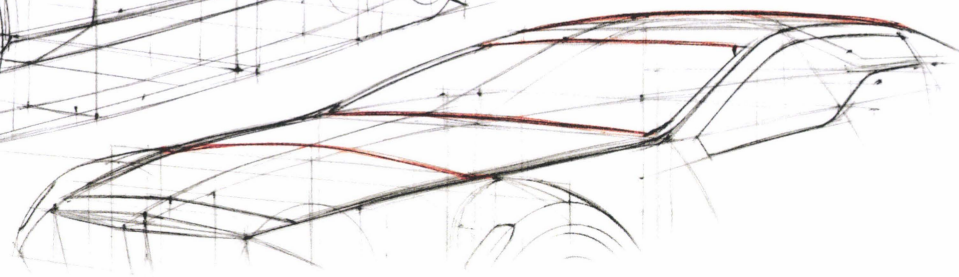

14. Modify the centerline to add more volume to the X sections that run across the top of the car and to the Z sections that run across the front of the car. Of special note is how the base of the windshield, where it connects to the hood, becomes an intersection line and not a section line normal to either the X or Z plane. Now go ahead and block-in a first pass at the headlight shapes, along with a couple of turn signals that sit on the front of the elevated surfaces of the wheel-well arches.

15. Redefine the X and Z sections (red lines) to match up with the new centerline. At this stage the basic body surfaces are all defined and ready for more detailing. Adjust the silhouette of the roof to the final line now that the X sections have been added.

16.

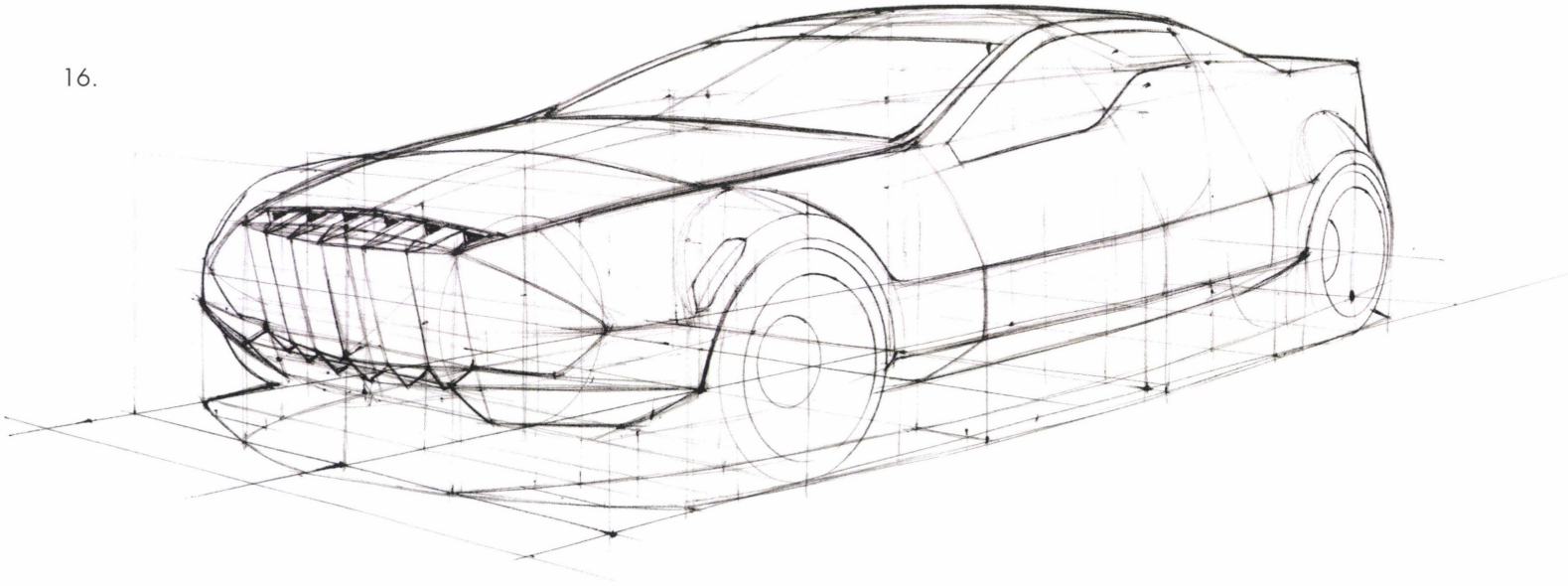

16. The narrative for this particular design calls for a somewhat retro-looking car with a slightly odd-feeling automotive flair. Let's try to make that happen with the details that are added next. Add an overly heavy, vertically bladed grill to the front to help achieve the desired awkwardness. To draw it, first divide the grill area on each side of the centerline into three roughly equal segments, which locates the vertical leading edge of each blade. When drawing something like these big grill fins, just think of each one as a new volume and start by drawing its own centerline and then add the volume of the fin by sketching in a few X sections. It's actually the exact same type of form building as the car body itself, just on a smaller scale.

17.

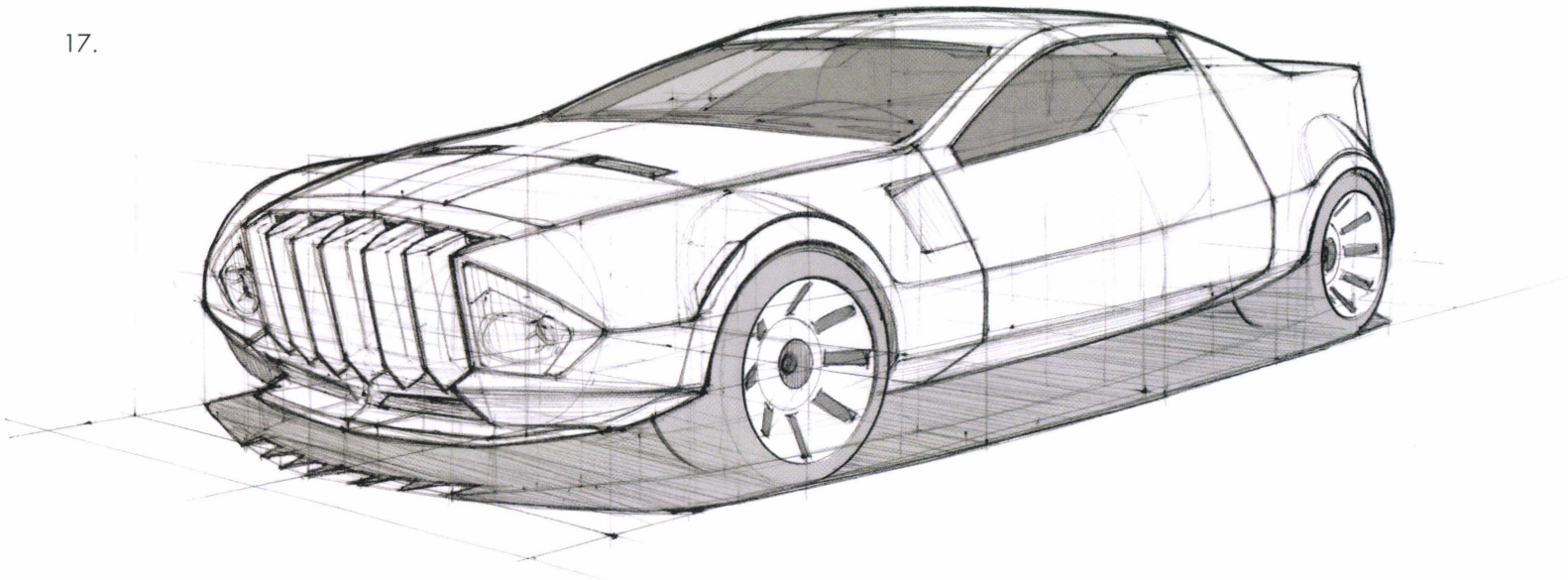

17. Decide if an overlay is needed to create a cleaner-looking drawing for presentation (as was done for the airplane on page 151) or if this working drawing can be used as-is. In this example, the line work was made stronger to emphasize the overlapping forms. A little flat value was added to the interior, windows, tires and cast shadow. This shadow shape helps the viewer understand a little more about the top view of the object even though it's a fairly low POV perspective. In addition to the line work, a few more details were added such as the front air dam, headlights, wheel detailing, hood vents, and a side vent just behind the front wheel well. This drawing now accurately represents a car volume in perspective and it can be rendered easily or reworked with an overlay to explore more styling variations.

18.

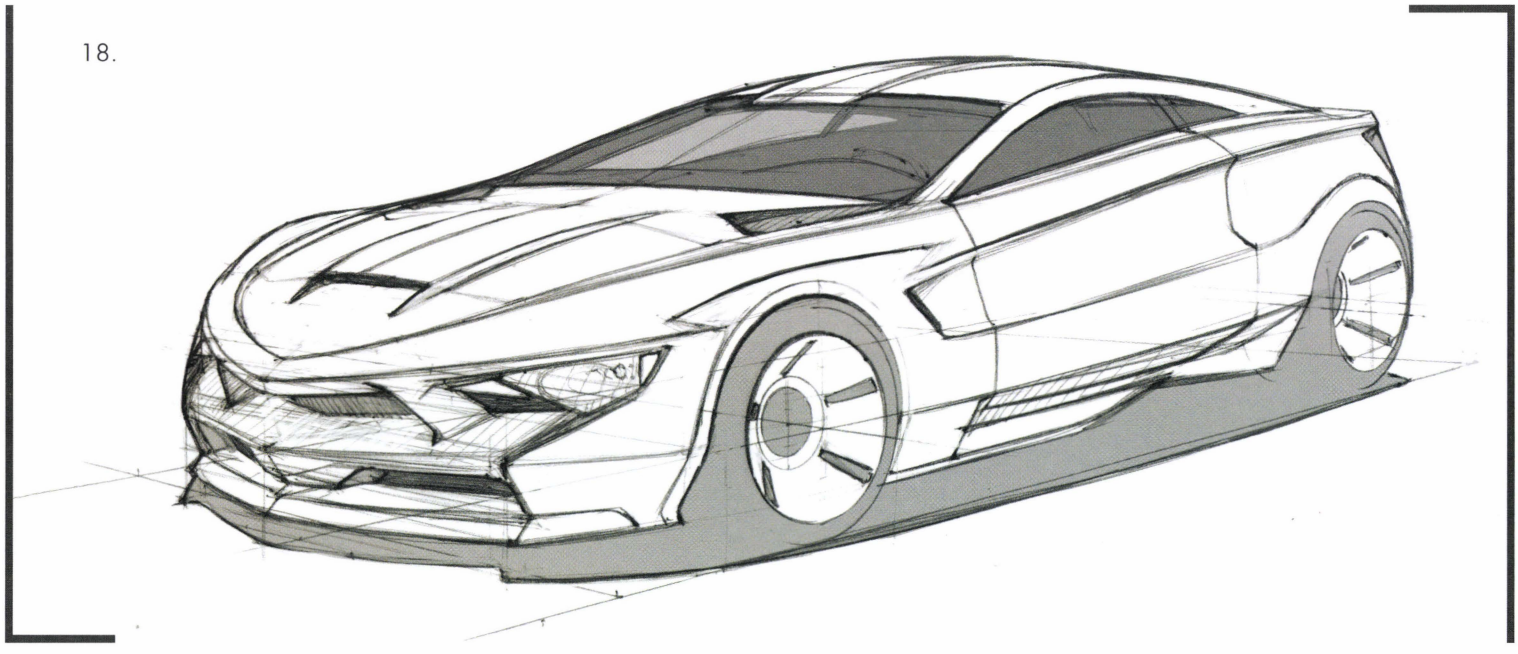

18. Let's say the design brief changes and now requires a sportier car. No problem! All the basic perspective has been worked out in the previous steps, so just slip the old design drawing under a piece of transparent paper and do an overlay, changing the styling while using all of the same perspective guidelines. It's best to work inside a pad of paper so there is some cushion under both pages while sketching. The binding of the pad will help hold the underlay in position so it doesn't move around while working. None of the perspective drawing steps change when doing the overlay, only the shapes. In the example above, the nose became a bit longer and lower and the rear wheel is a little larger than the front wheel, but beyond that, almost all of the overall packaging remains the same. If the goal is to improve your perspective drawing skills to communicate and develop your designs, then using overlays is a very efficient way to quickly create many styling variations.

VEHICLE SKETCHING WITH A WIDE-ANGLE LENS

Using a wide-angle-lens perspective grid is a very common practice with vehicle designers. This has a lot to do with how cars are visually presented to the world through advertising and photography. A wide-angle camera lens makes the vehicle feel more dramatic by warping the perspective grid into an extremely curvilinear space that cannot be seen with the naked eye. This makes the images intriguing to the brain. Since we only see this effect in wide-angle photography, sketching this way conveys the same emotions as those photographs. There are some subtle differences between sketching vehicles with a curvilinear grid and a linear one (see page 062 for a refresher). This mainly has to do with how the grid is set up and what part of the grid to use for the sketch. The easiest and most common way to create one of these grids for vehicle sketching is to place the camera lens at the center of the image frame.

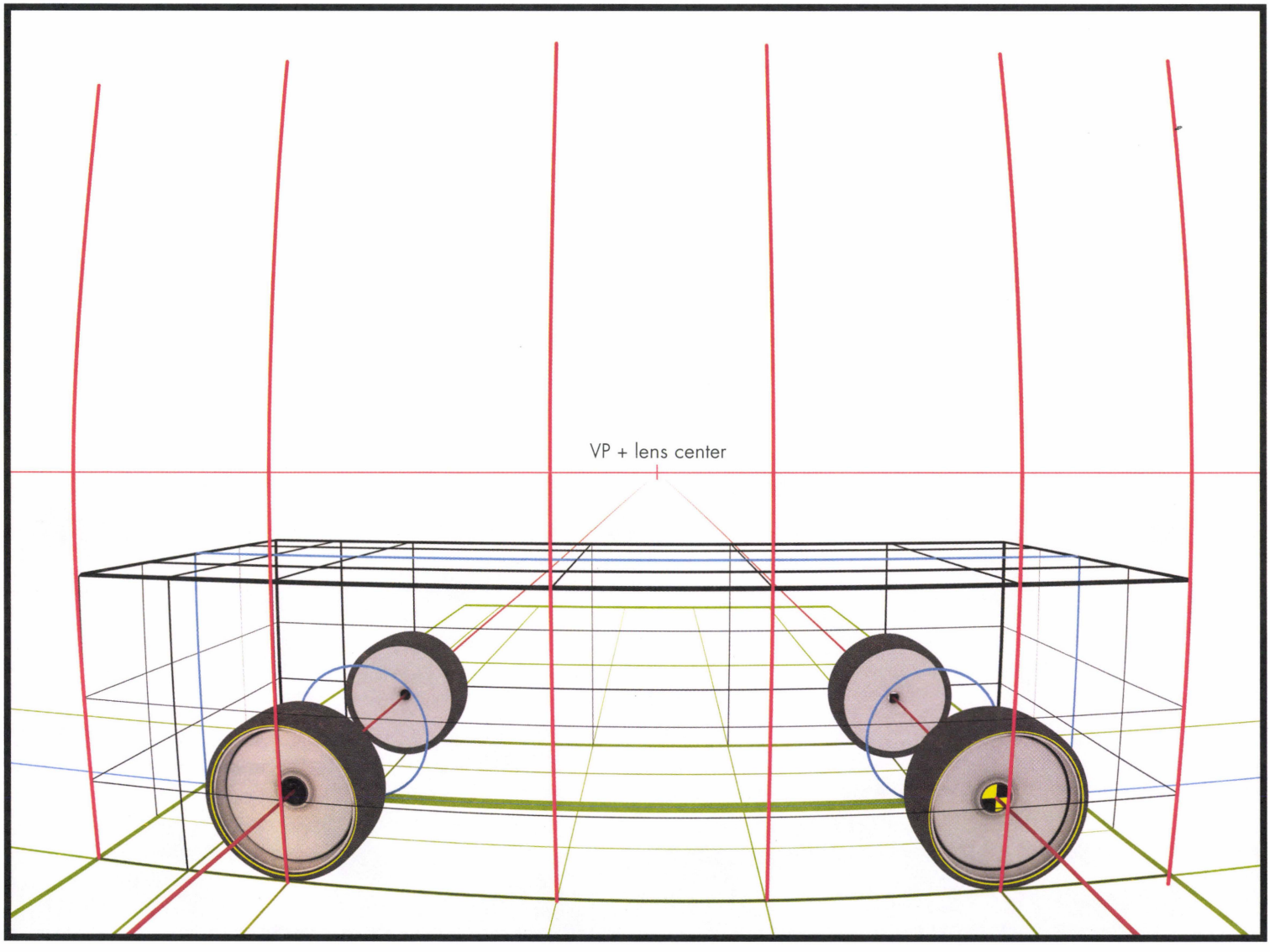

By placing the Horizon Line and the Vanishing Point at the center, any lines that radiate from the VP will not be warped. This makes sketching and mirroring the sections much easier. Vertical and horizontal lines in the perspective grid will bend like they are wrapping around a sphere. The amount of the bend will increase as the lens length shortens and as the lines get further from the center of the image. This kind of grid has five Vanishing Points to think about: left, right, above, below and dead center. Observe this convergence and the influence of the five Vanishing Points on the grid above. The most subtle thing to understand, and something that will make the sketched object appear a bit more warped than what feels natural, is that still photographs and sketches can be cropped so that only a small portion of a much larger curvilinear grid is seen, resulting in an image that might feel strange. So if you want the the wide-angle-lens grids to feel more natural, try to keep the object centered in the frame, add a few background elements to reinforce the lens effect, and do not crop the grid. Sometimes, however, this unnatural/warped perspective is deliberately chosen for creative reasons, as shown in the examples on the facing page.

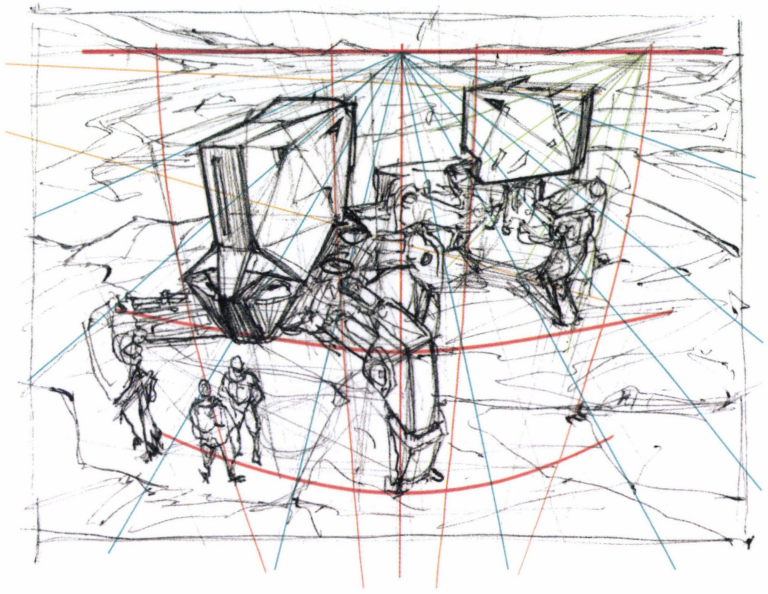

The grid used to sketch the racecar (above) is a proper curvilinear grid, but only the lower half of the left side is being used. The only way to ever see something like this in a photograph is to crop it after the picture is taken.

The same is true of the bottom sketch. If this were a full-frame shot with a wide-angle lens, the Horizon Line would be bending because it is a long way from the center of the image. Since it is not bending, this must be a cropped, wide-angle-lens curvilinear grid. Look at the mech walker that is farthest away and see that it has two more Vanishing Points. Technically these guidelines should also be bending but for short distances, just draw them fairly straight. Looking at the bent vertical guidelines, notice that the sketched mechs, people and environment follow this grid. This cropping of a wide-angle-lens still image is an important concept to understand as it adds stylization to your images. All of the perspective-drawing constructions are the same, they just use an extremely curvilinear grid.

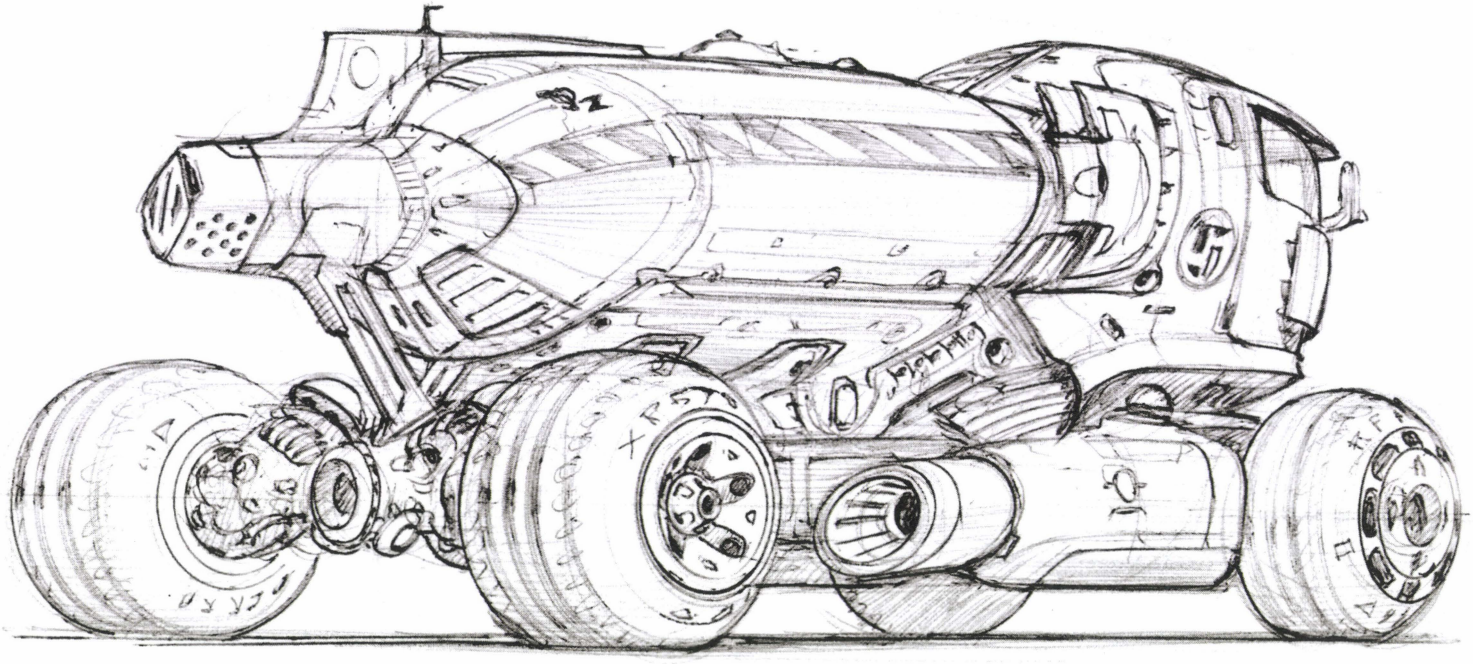

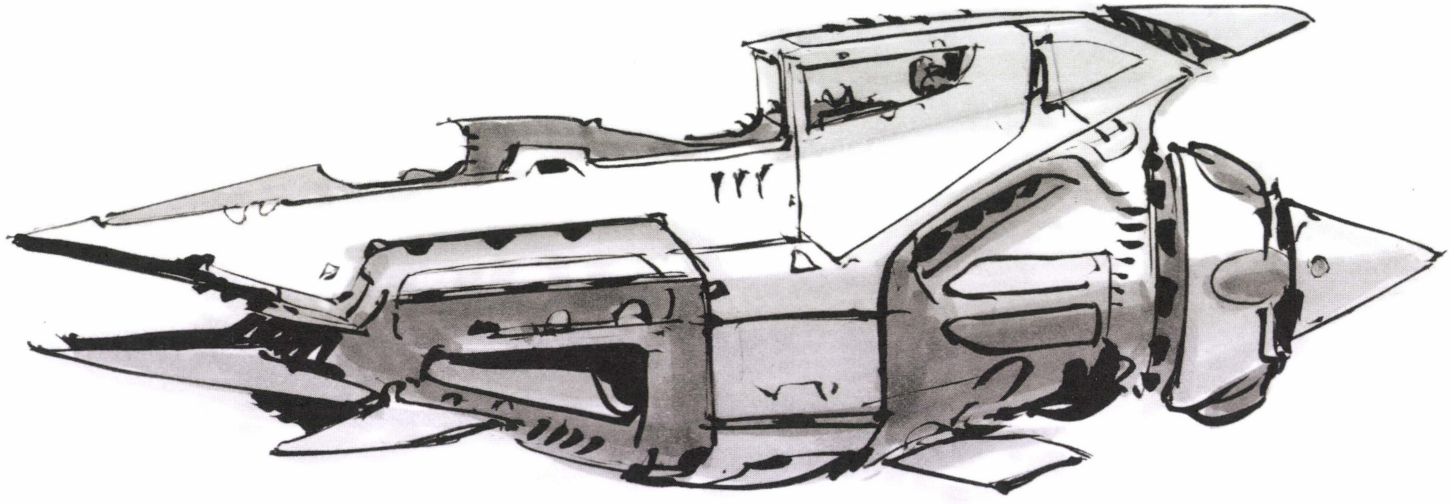

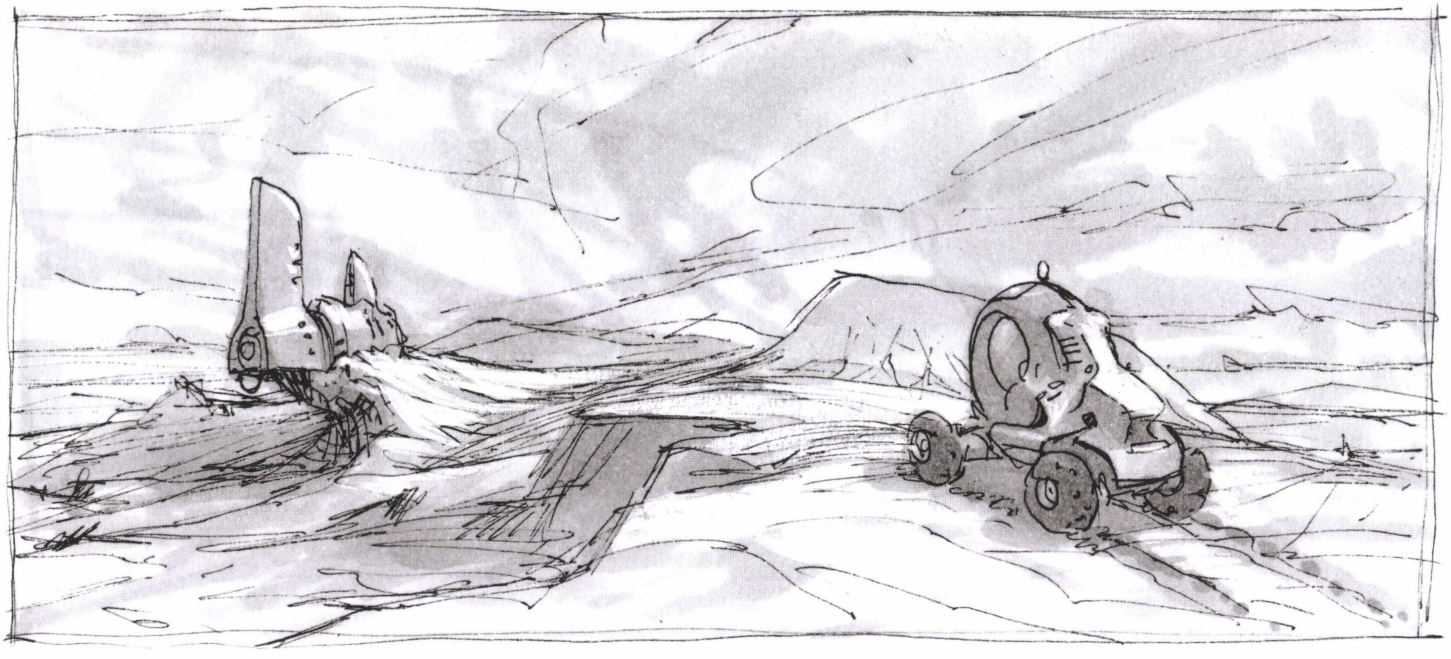

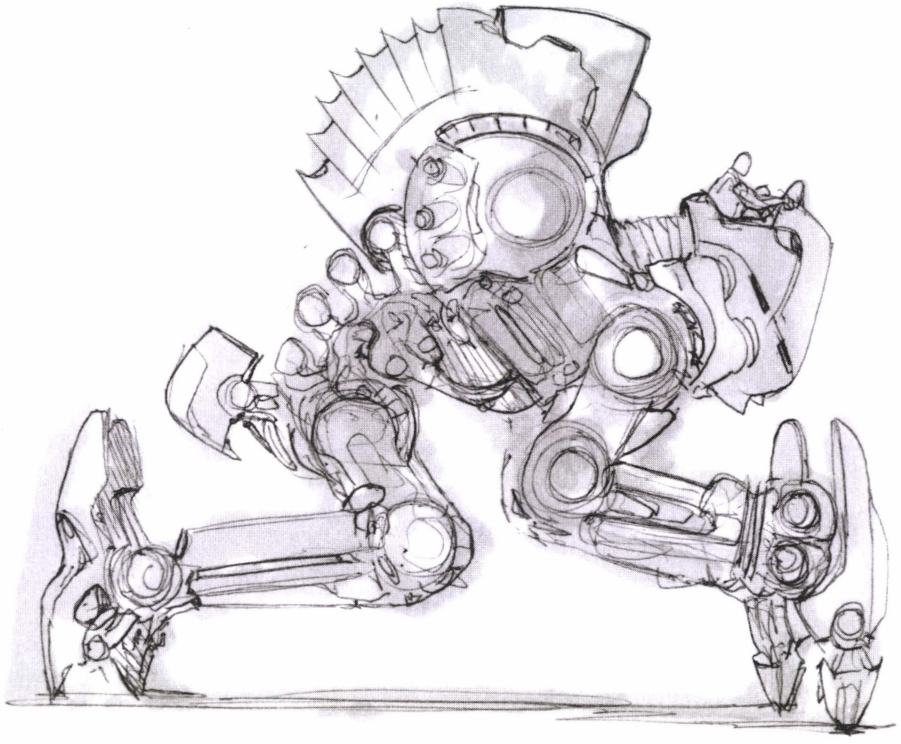

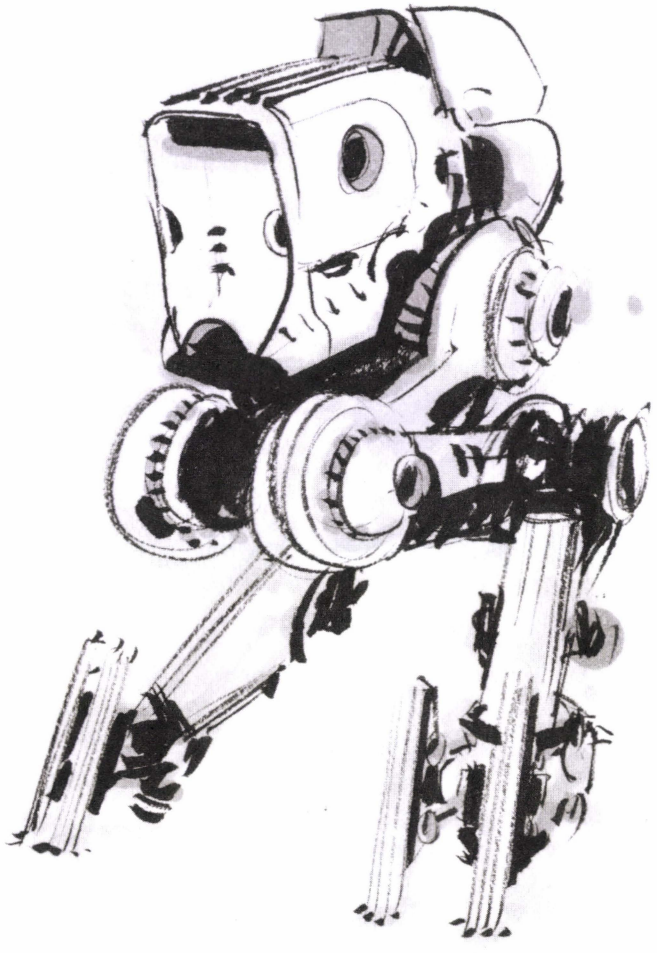

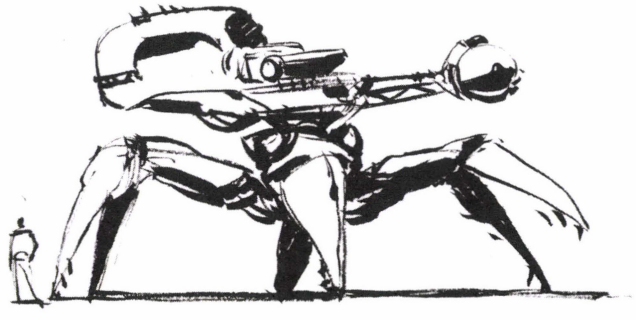

CHAPTER 10

SKETCHING STYLES AND MEDIUMS

Experimenting with various mediums is part of the joy of drawing. It can seem like a never-ending quest for just the right pen or just the right sketchbook, in which the paper accepts the ink in the perfect manner. So it has been for us over the last two decades; an always enjoyable, always evolving test of tools and papers. This chapter shares some of our favorite mediums and the sketching styles those mediums help to create. Try to adapt a style that maximizes what each medium is best at doing. For example, graphite pencil smudges, so gradations are easy to do; erasing graphite pencil is easy too. Those characteristics should be seen as opportunities and can be incorporated into the style of the sketch.

Unlike most of this book, the sketches in this chapter have a lot of rendered value and are not strictly line drawings. They are presented here not as rendering exercises but as sketches with perspective drawing and design-thinking woven in. The value application on these sketches is there to demonstrate the ability to explore the design direction before committing to the stronger line work. All of them have strong perspective drawing skill at the root of their appeal, without which no amount of rendering with value or color would improve them.

The specifics of adding value and step-by-step examples of using the different mediums will be covered in the second book in this series, *How to Render.* A complete list of preferred mediums with links to where they can be purchased can be found online at: **www.scottrobertsonworkshops.com**.

Discovering great art supplies is like a treasure hunt. When you find supplies you love, buy some extra inventory for the future because when these products are discontinued—as they sometimes are—it can be a very sad day indeed.

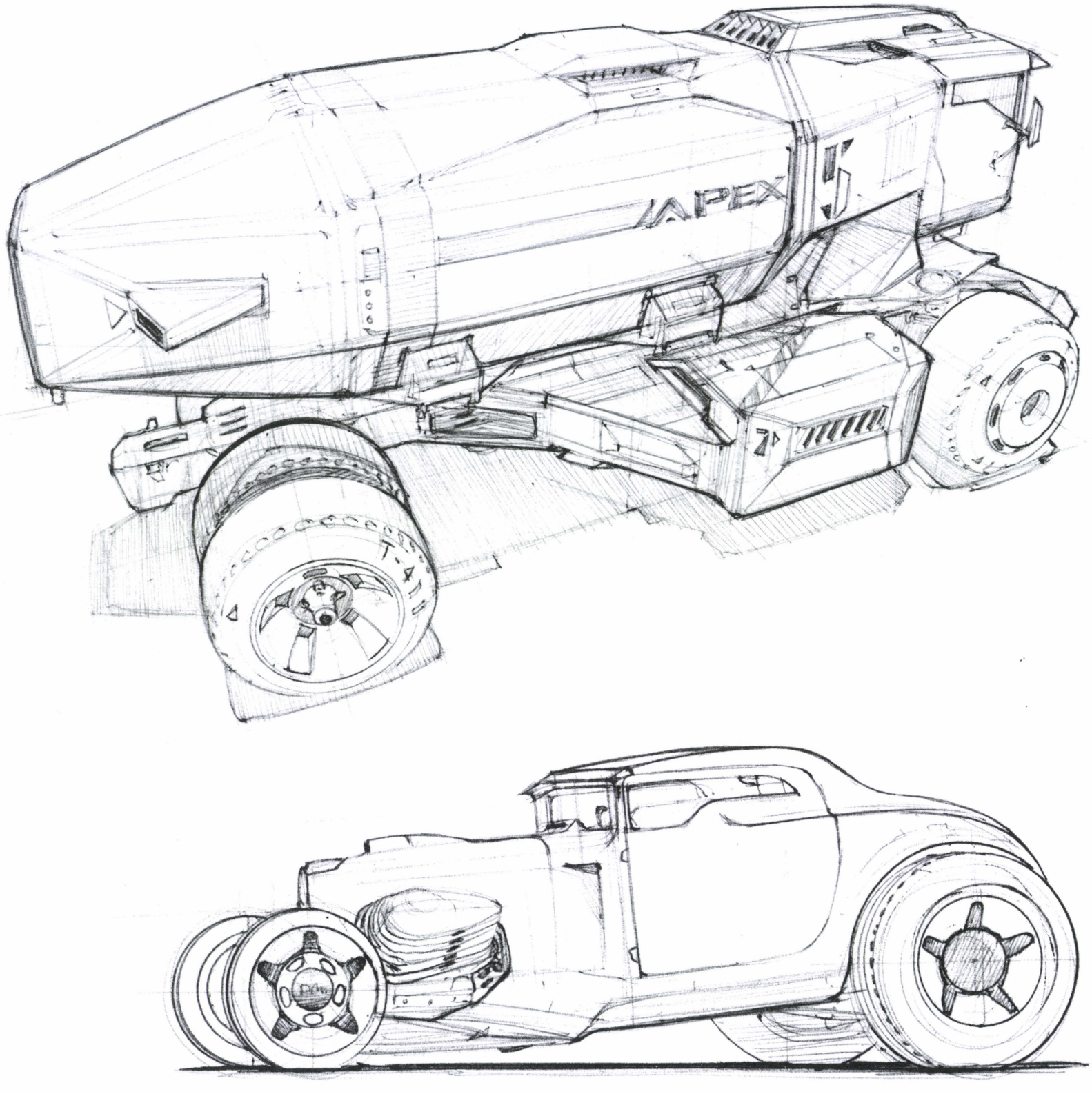

BALLPOINT PEN

Ballpoint pens are for much more than signing checks and writing to do lists. When used on paper that is not too smooth, like in a Strathmore sketchbook, or on any paper with a somewhat rough surface to it, the ballpoint pen really comes to life. With a soft enough touch it delivers very light lines. Be sure to dab the pen tip on a paper towel or old rag placed next to the sketchbook while thinking about the next line you are going to add. This good habit will keep the ink from balling up on the end of the pen and dropping big splotches on a masterpiece in the making.

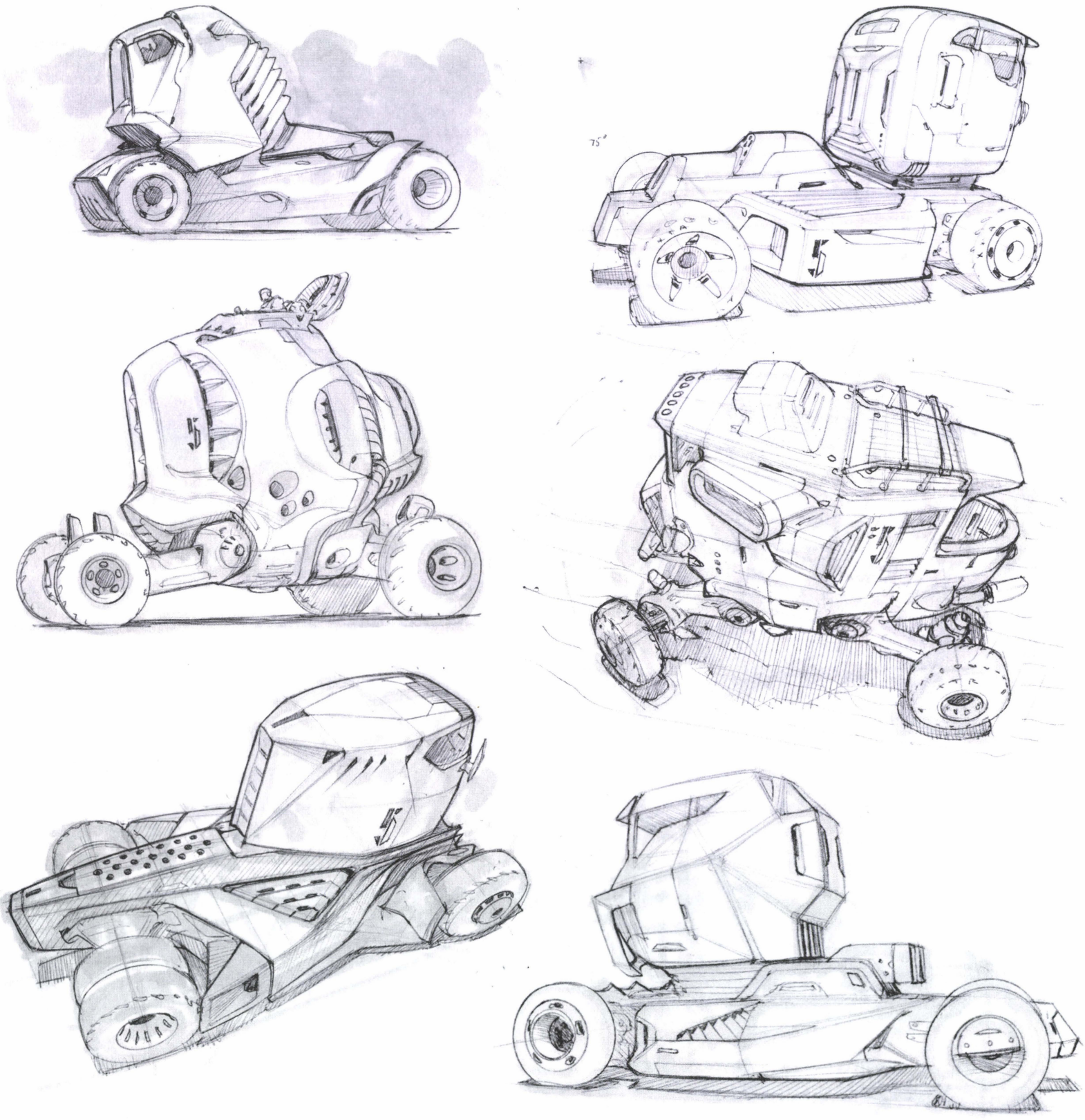

COPIC MARKER + BALLPOINT PEN

This technique has been used repeatedly in this book: start with a light gray Copic marker like a C-0, N-0, or T-0, and loosely sketch the forms. Block out big silhouettes or add guidelines before laying down the finished line work with a ballpoint pen. Be careful about doing more marker work after having added the ballpoint pen, as it will smear easily and turn most ballpoint pen lines purple. To render the object, it's best to do it on a photocopy or scan and render it on a computer.

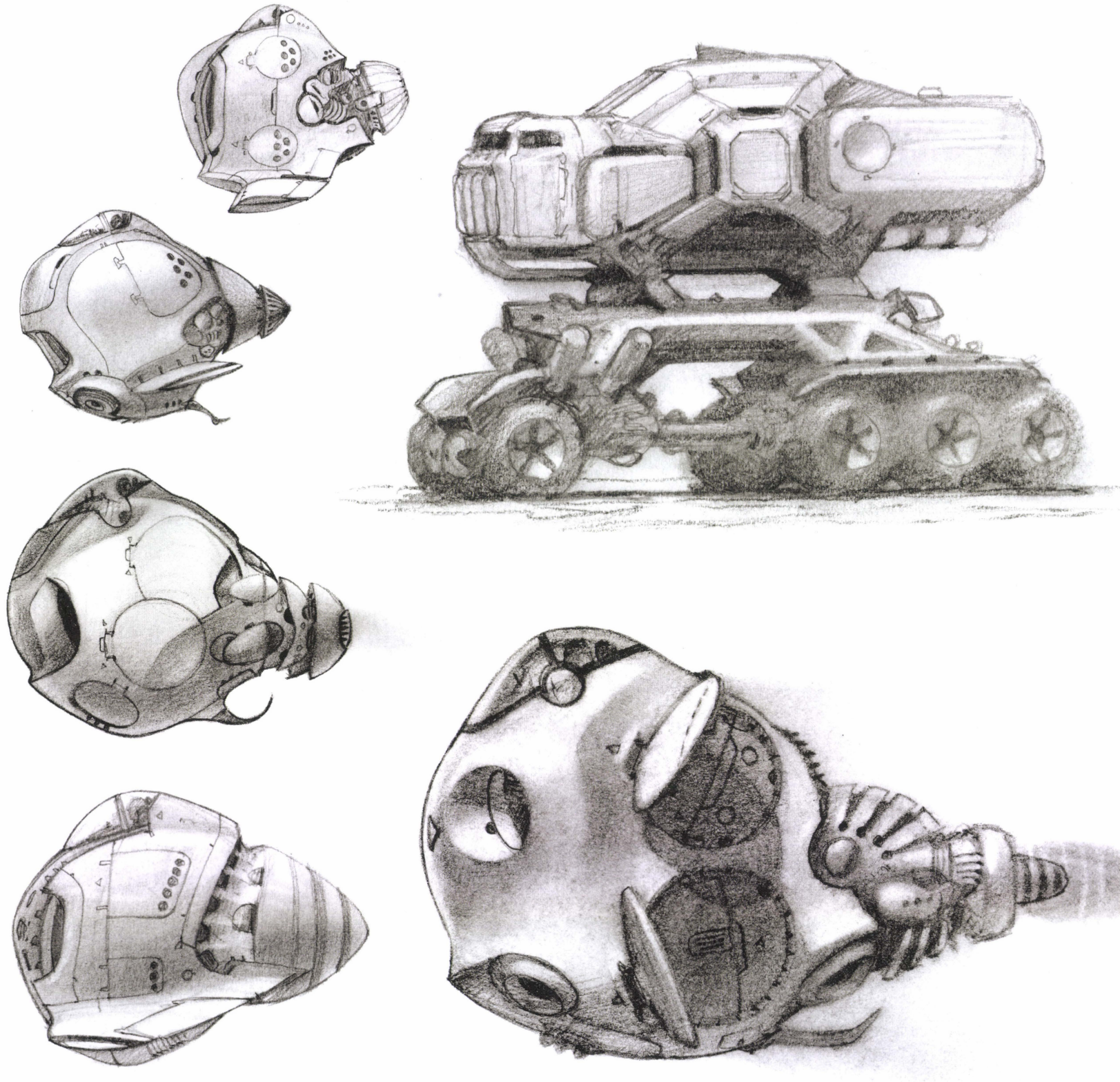

GRAPHITE PENCIL

Graphite is a wonderfully flexible medium and it feels so pleasant to use, in its familiarity. Since it is so easy to smear the graphite while drawing, use this as an advantage—smudge it with a Webril pad or a smudging stub and sketch with the value. The human brain is conditioned to understand value changes as form changes, so just play with the value changes and discover forms within the shifting values. After the forms materialize, go in and refine them with line work. Should a good sketch be created using graphite, be sure to spray it with a bit of Krylon fixative when it's done to keep it from smearing. Remember that after it has been sprayed, it will be difficult to erase any of it.

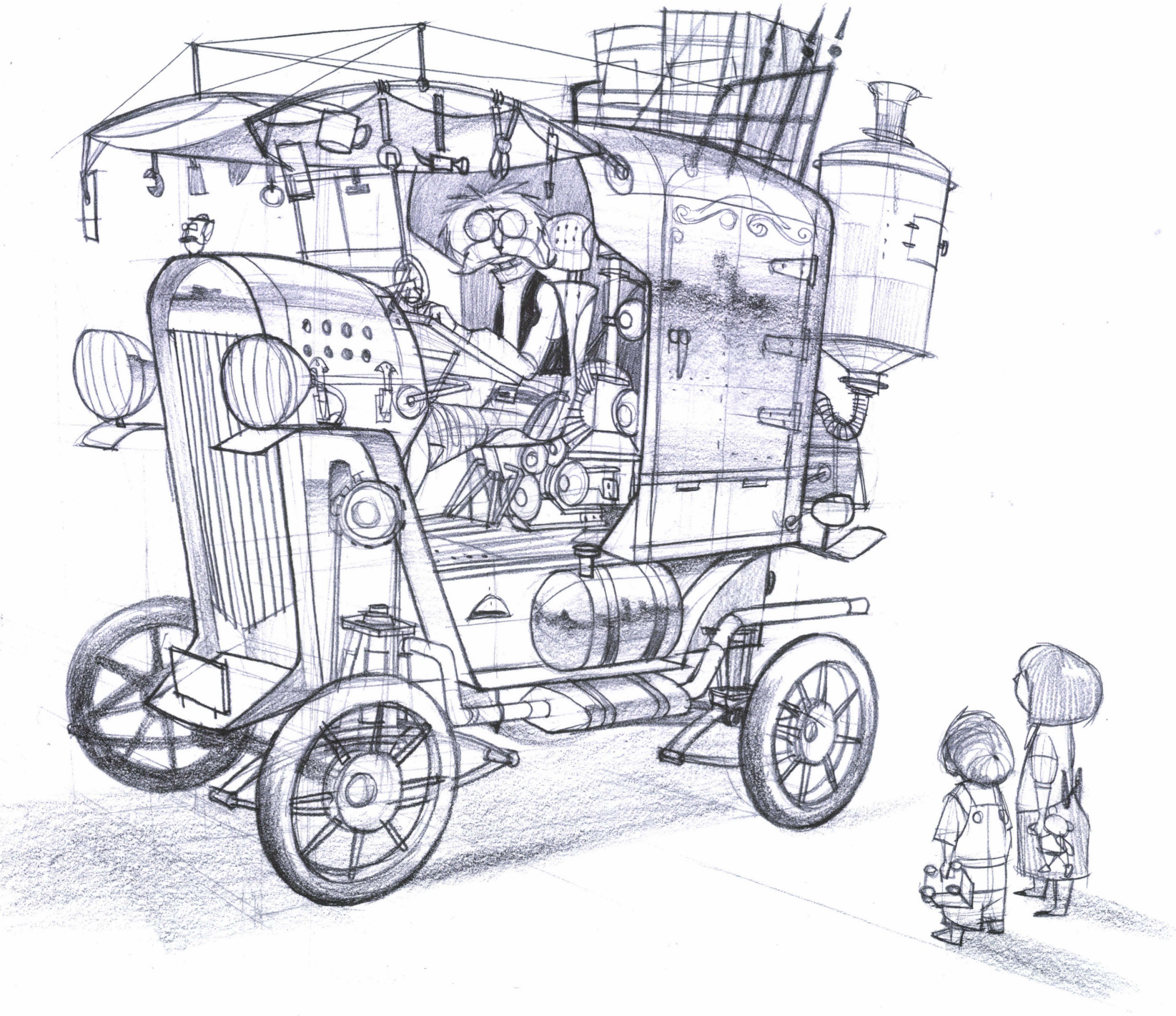

sketch by Roy Santua

COLORED PENCIL

If you like the feel of drawing with a pencil, but it's not dark enough, try using a colored pencil. These pencils, the best being the butter-smooth Polychromos made by Faber-Castell, do not erase easily so a light touch is required. Like graphite pencils they can smudge, so using the side of the pencil is an easy way to lay down gradations. A colored pencil is one of the most flexible drawing tools there is.

Colored pencils are wax-based, so it's best not to use markers over them because the alcohol in the marker ink dissolves the wax and clogs the nibs, ruining the expensive markers. Wonderful results can be achieved with the two if all of the marker work is first, followed by the colored pencils.

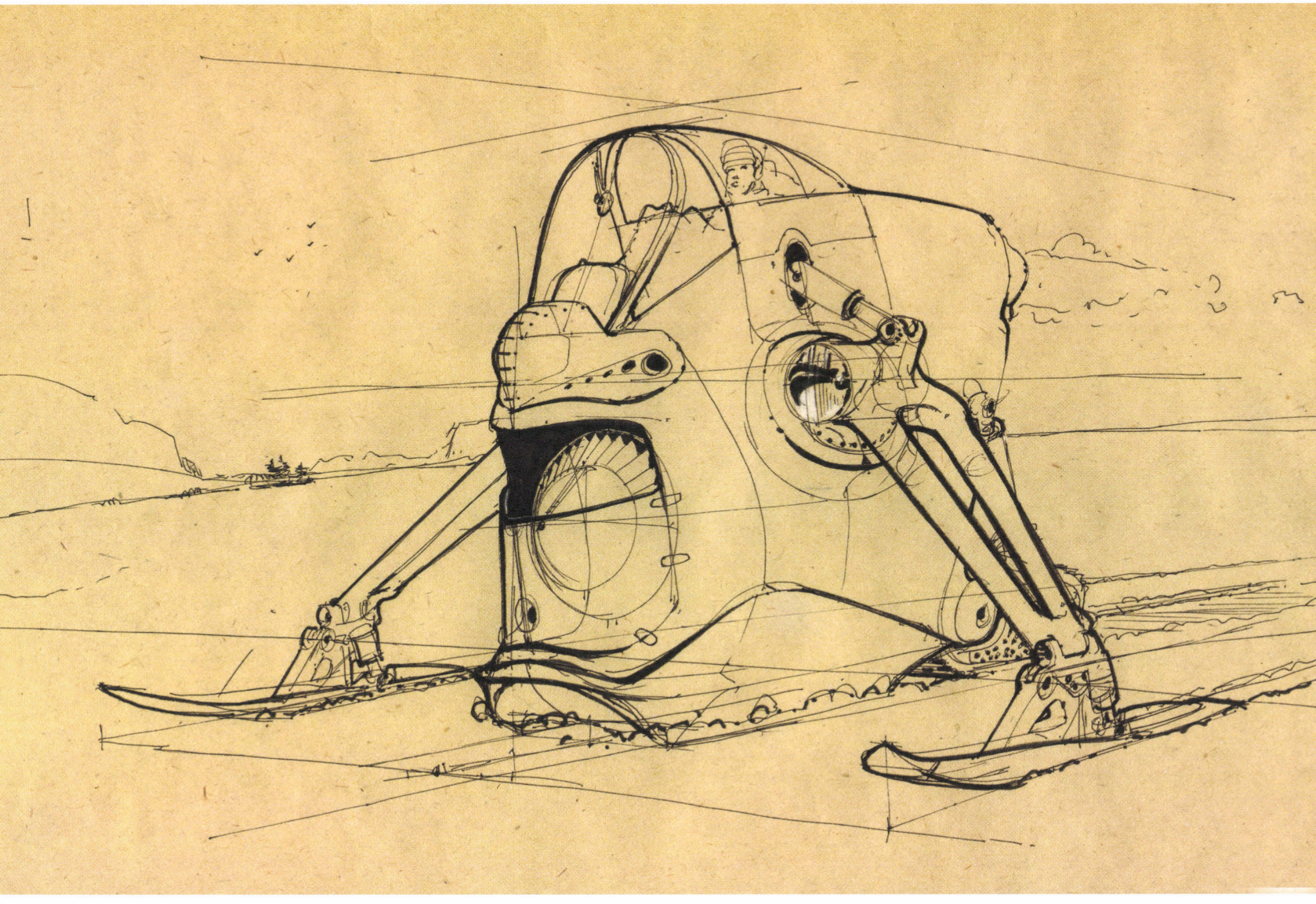

PILOT HI-TEC PEN ON NEWSPRINT

The Pilot HI-TEC is an excellent pen for several reasons. Markers can be used over the top of it when it is dry, the nibs are steel and do not bend or degrade the line quality as they get worn out, it comes in a variety of line weights and colors—and lastly, it provides a solid, constant line width. Try using one on paper that is nice and absorbent, like newsprint or bond paper with a decent amount of tooth (roughness). If the paper is too smooth, like vellum or tracing paper, the ink will take too long to dry, increasing the likelihood of accidental smears while sketching. Be aware that newsprint is not very archival and fades quickly, but it feels great to sketch on. The thickest lines of this sketch were done with a felt-tip pen.

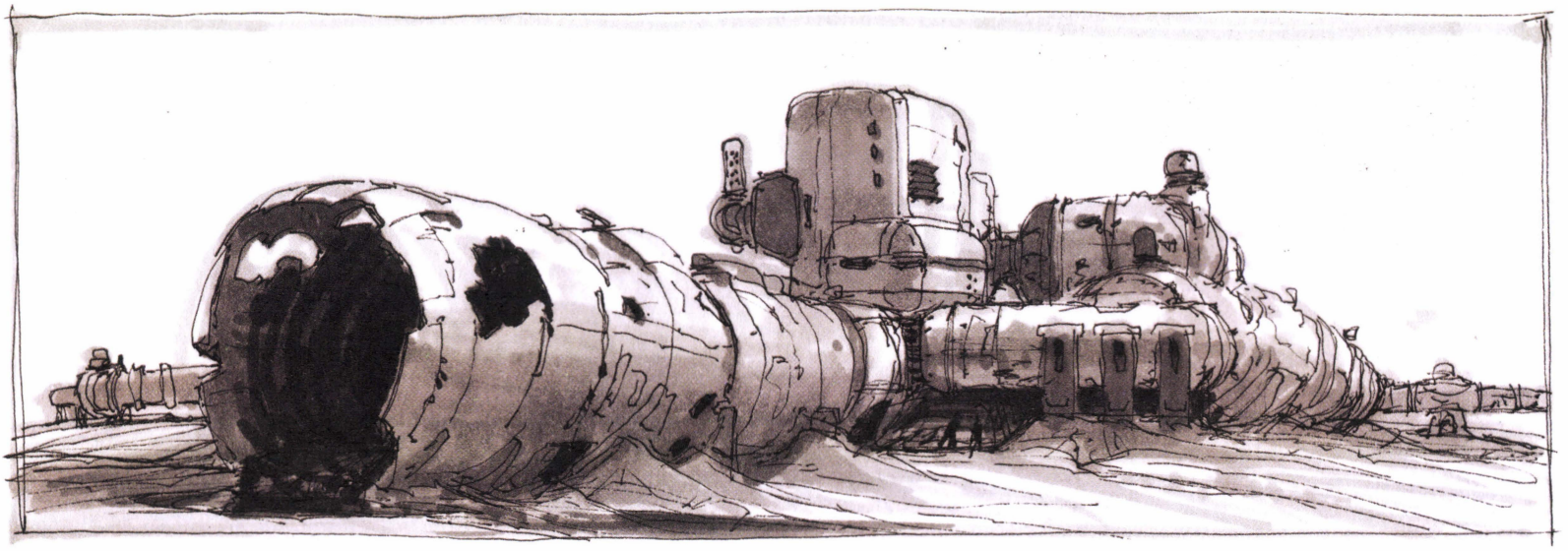

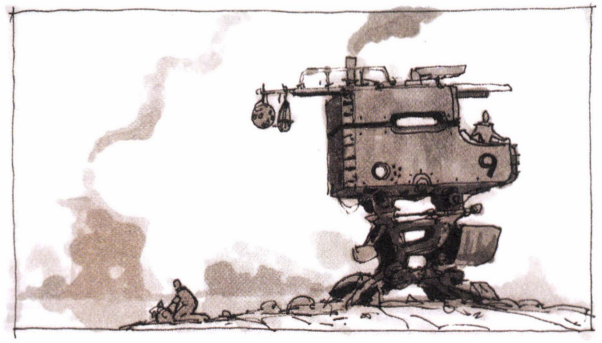

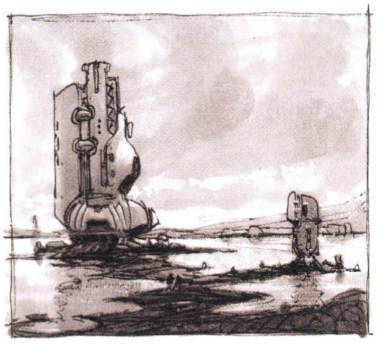

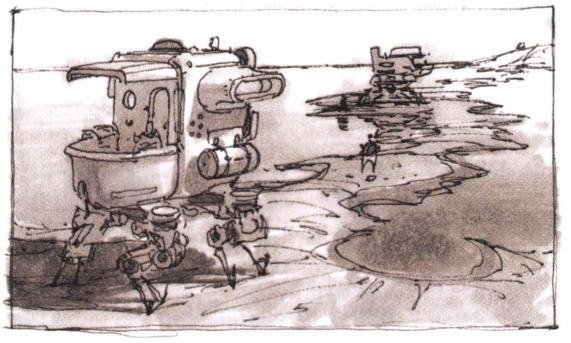

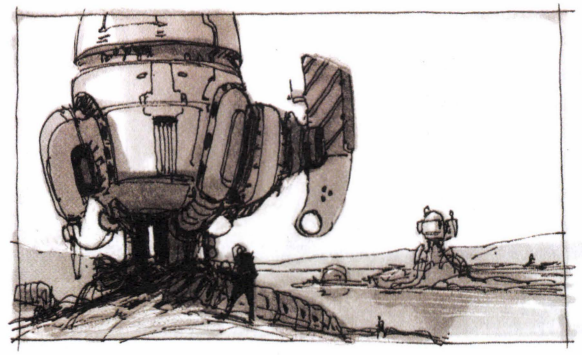

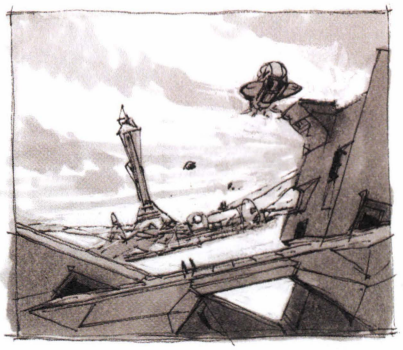

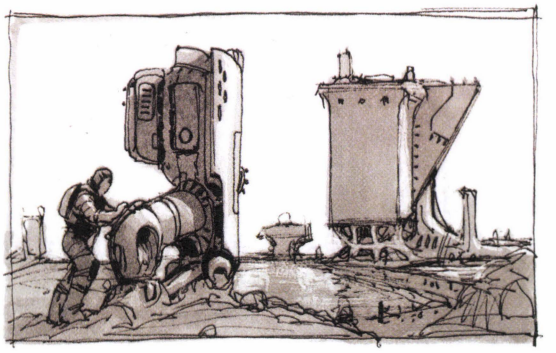

COPIC MARKER + PILOT HI-TEC PEN

Here are some examples using Copic markers with a black Pilot HI-TEC pen. There was also a touch of Winsor & Newton Permanent White gouache used to clean up some of the white areas after the sketches were done. These are more full-value sketches than the marker-and-ballpoint-pen examples on page 191 because adding marker over this pen will not smear it, so it's a good idea to take advantage of the opportunity.

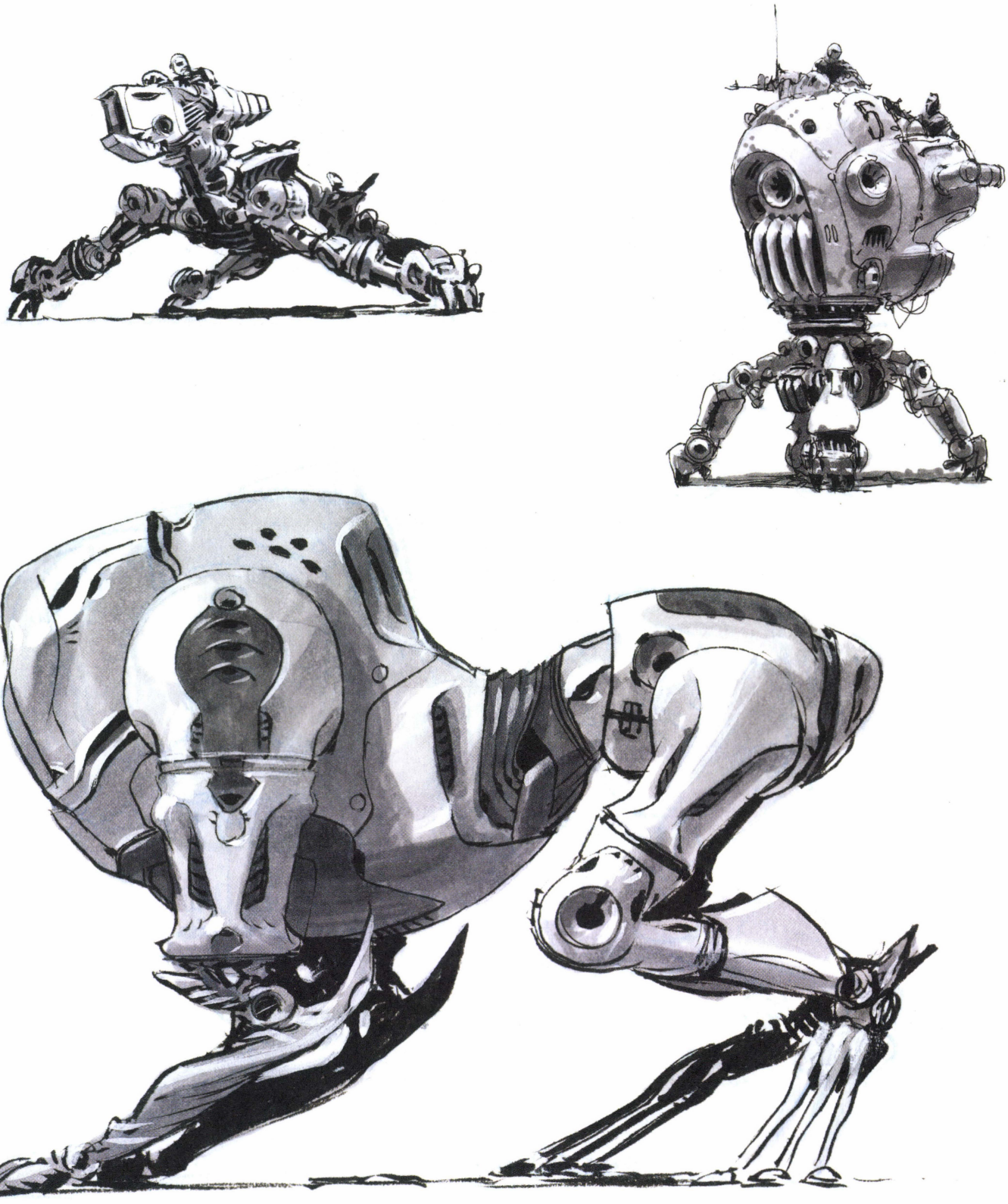

NON-PHOTO BLUE COLORED PENCIL + MARKER + BRUSH PEN

An animator's classic technique for laying in loose, sketchy guidelines is to use a non-photo blue colored pencil, then ink the drawing with black and photograph or make a copy of it so that the non-photo blue lines disappear. The examples here were color-scanned so the blue pencil guidelines can still be seen. The order is important: first non-photo blue pencil sketch, then marker, then ink lines, and then more marker if the ink pen used will not smear. If the non-photo blue pencil sketch is light enough, marker can be added over the top of it, but ruining the nibs will still be a problem.

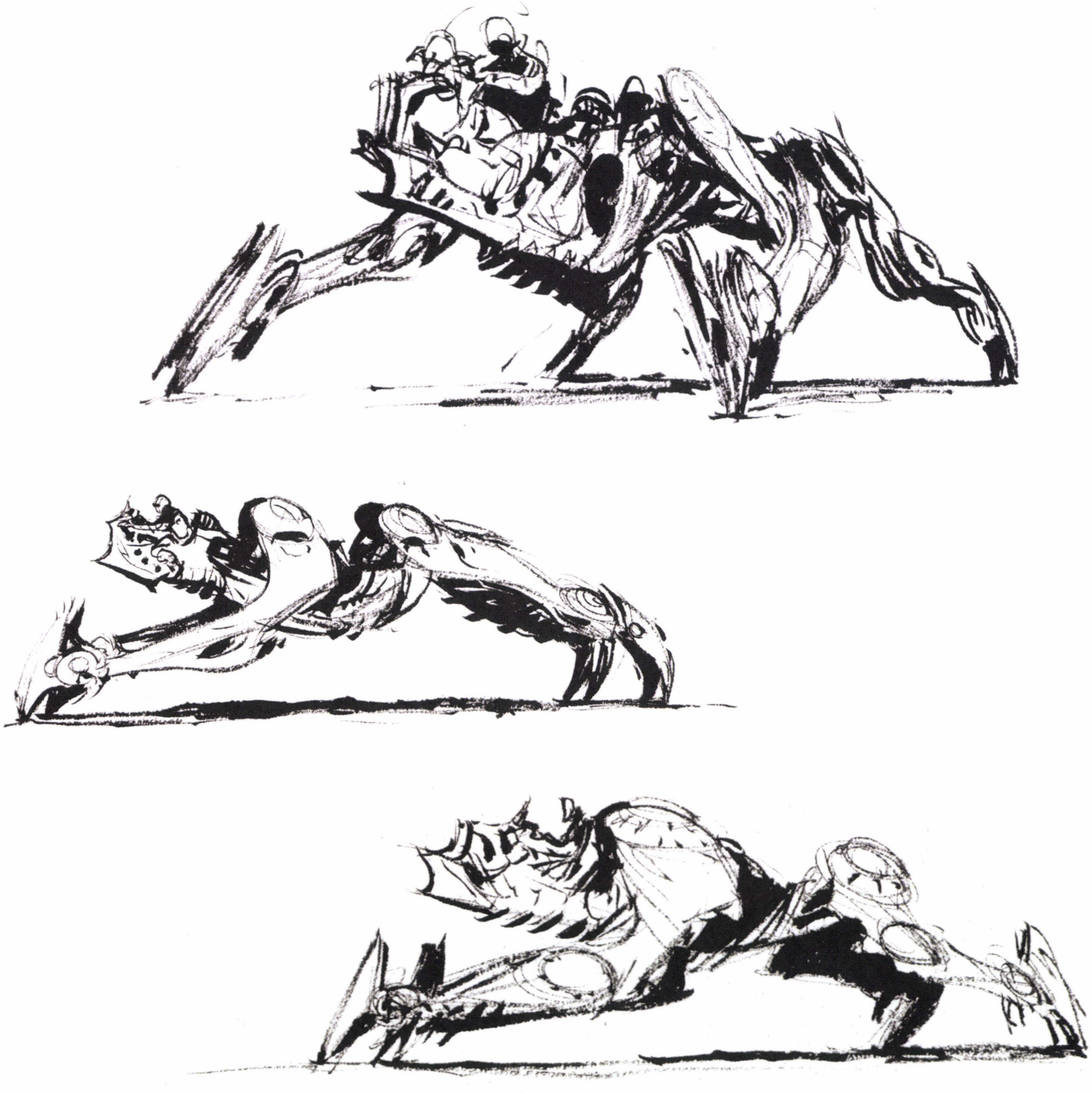

PENTEL POCKET BRUSH PEN

This versatile pen makes it possible to draw very thick to very thin lines in black ink. It has a brush tip like a real paintbrush, and it can make very thin lines if the absolutely lightest touch is used. For those who are a bit heavy-handed, using this pen will force the development of a lighter touch. It is not ideal for beginners, as it requires practice to use skillfully, and since every line is pure black, it is very difficult to explore before committing to the line. On the flip side, using this pen will force thought and pre-visualization of the lines before they are drawn, because once they are down on the paper they are there to stay.

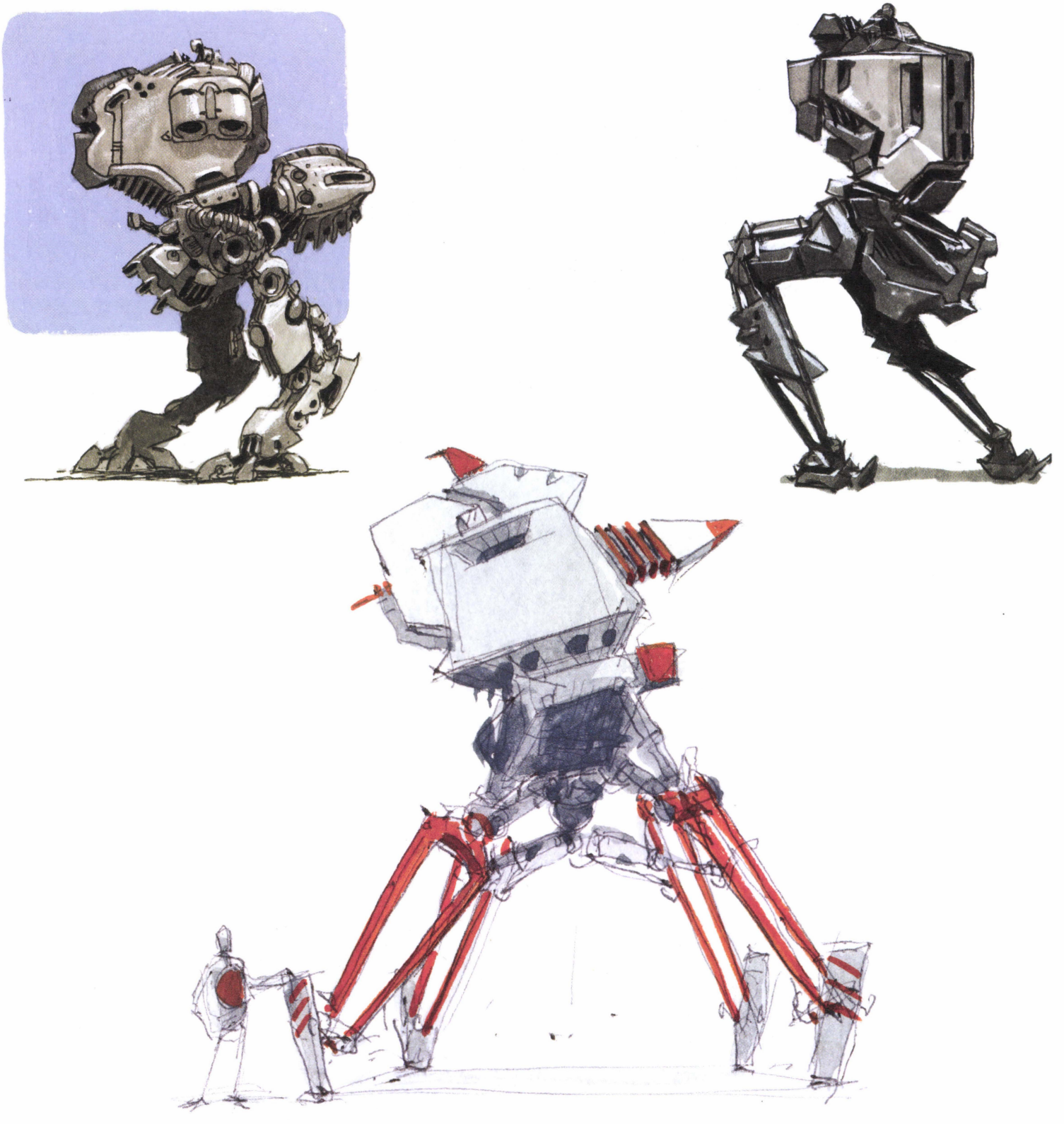

COPIC MARKER + PEN + GOUACHE

The top two sketches on this page were done with Copic markers and Pilot HI-TEC pens (0.25 and 0.5), then the silhouettes were cleaned up with gouache. Gouache is ideal for this, as it is opaque and can cover the loose marker strokes left behind during the early part of sketching. Blue, white, and black were used on the upper-left sketch, and just black and white on the upper-right. The lower sketch was done with a ballpoint pen, and gouache was used to wash over the top of it and add a quick graphic color accent.

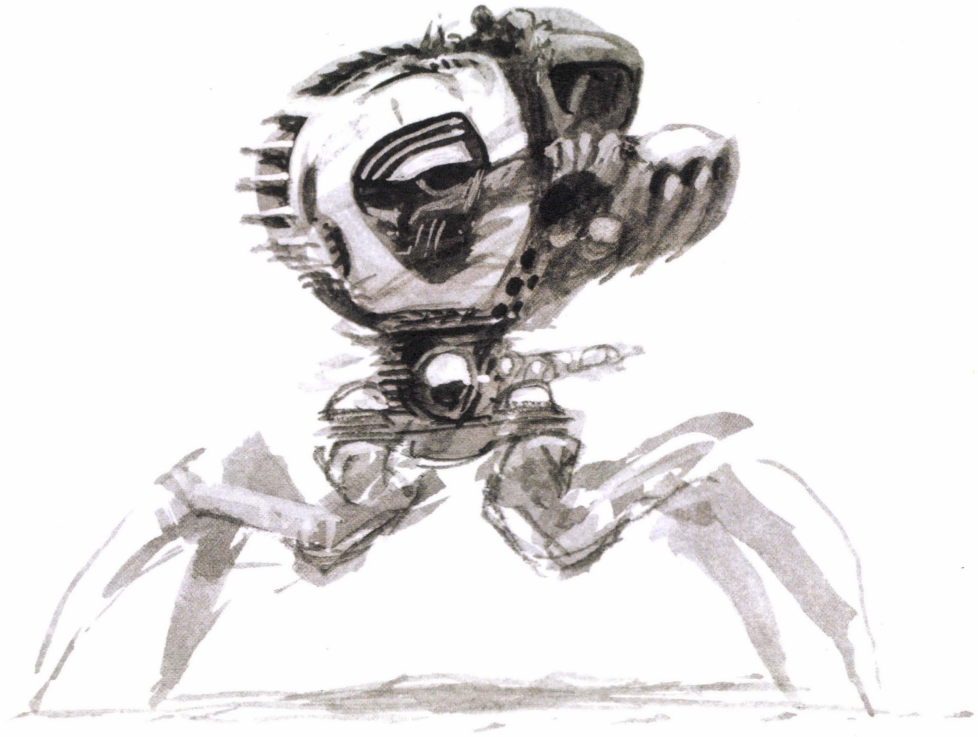

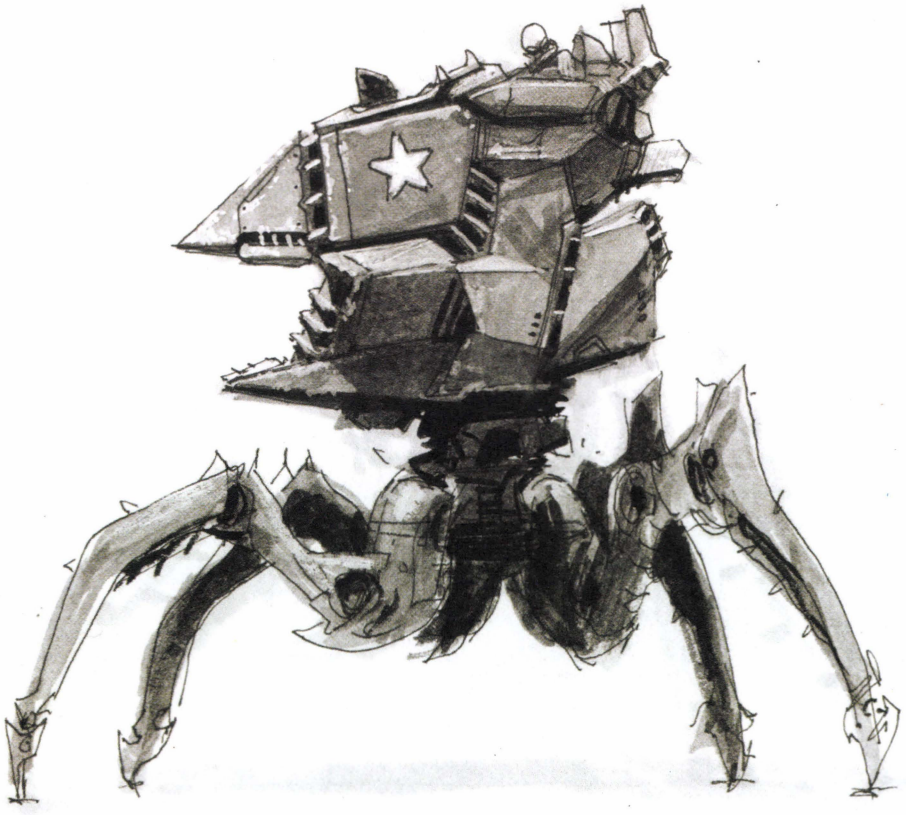

GOUACHE ON ILLUSTRATION BOARD

If brushes and wet media are appealing, and shapes, rather than lines, are easier to think about, try gouache or acrylic paint. These sketches were done on Cottonwood Press illustration board with Winsor & Newton Jet Black and Permanent White gouache. Pre-visualizing all of the perspective constructions is still necessary to make a decent educated guess at the perspective of the object, but with no guidelines visible it's actually easier to hide the loose perspectives that will most likely result.

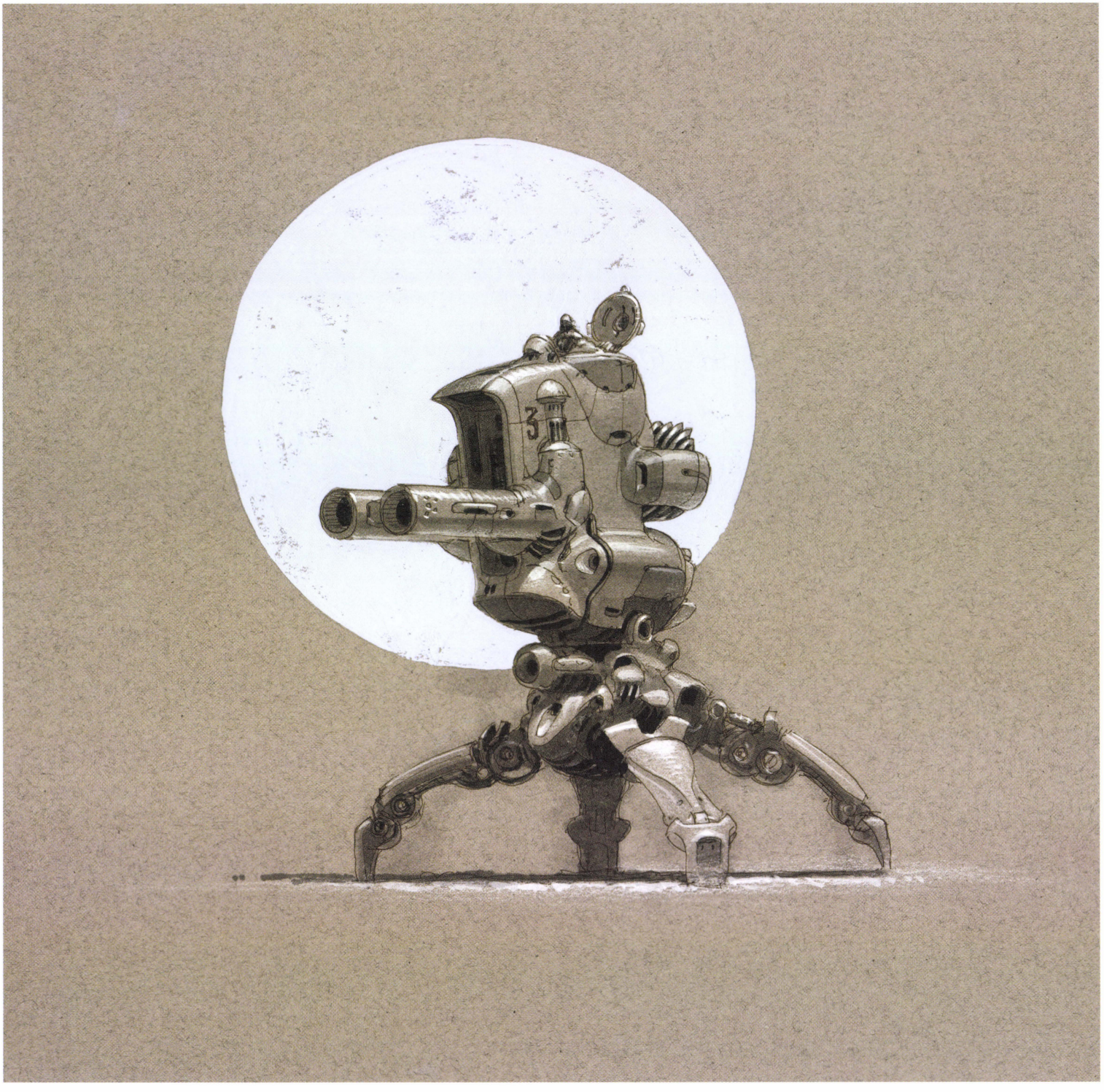

TONED PAPER + MIXED MEDIA

Although this image is highly rendered, it's still a sketch, mostly because some of the silhouette is still being held by the line work from the HI-TEC pen. It's included here because it's an excellent example of a toned-paper sketch. Most toned-paper sketches use the tone of the paper as the base middle value of the rendered surfaces. Working on toned paper is a very user-friendly experience because the lines are very low contrast compared to seeing them on white paper. This lower contrast allows for more exploration before committing to the finished lines, and since the line work does not show up that easily, it is a common technique to add some value or an opaque gouache background, as shown in this example, to help the object become more visible.

DIGITAL: SKETCHBOOK PRO

This image was created using Sketchbook PRO from Autodesk. When working digitally, one of the most enjoyable ways to sketch is with value. Working this way is quite clean compared to working with various traditional media together. Working on a tablet, or even sketching using a smartphone app, can be fun and enjoyable. However, you will need to take the time to learn how to manipulate the software, just as you've learned to manipulate non-digital media. Even though this is a full-value sketch, it's still important to think about the techniques covered in this book. The appeal of any sketch relies on the quality of the underlying drawing. This type of full-value sketching will be covered in detail in the next book of the series, *How to Render.*

GLOSSARY

A

axis, *plural* **axes:** One of the reference lines of a system of coordinates.

auxiliary vanishing point: That point toward which receding parallel lines appear to converge for secondary elements of an object or a scene, such as a ramp or a pitched roof.

atmospheric perspective: A technique of rendering depth or distance in painting by modifying the tone and distinctness of objects perceived as receding from the picture plane, especially by reducing contrasts of light and dark. Also called **aerial perspective.**

B

bounding box: A box defining the overall dimensions of an object.

belt line: A horizontal boundary dividing the upper and lower parts of a car body, specifically the line directly underneath the side windows of the car, the junction of the upper greenhouse and the lower body side or shoulder.

C

character line: An important feature line or crease which may be sculpted or created by the meeting of 2 planes on an object's surface, and which gives or adds both definition and personality or character to the form.

Cone of Vision (COV): The cone of vision is the visual region displayed by a drawing that relates to a person's normal vision without his/her peripheral vision.

contour line: A line that curves over an object's surface and reveals the item's surface characteristics.

convergence: As parallel lines recede into the distance, they appear to merge at a single point at a person's eye level (also known as the horizon line).

crown: Curving outward. Crown in an object's body panel is compound curvature - usually convex: in one plane it would simply be "curvature."

cut line: The necessary clearance gap between two adjacent body panels, such as between a door and the side body of a vehicle.

D

draw through: To draw through a surface as if that surface has an invisible skin resulting in drawings similar to wire-frames seen in 3D modeling programs.

degree (of ellipse): The line-of-sight angle at which the plane, defined by a circle in perspective, is viewed.

E

elevation view: A side view of a structure or other mass.

ellipse: a circle in perspective.

F

fillet: An additive volume, usually with the cross-section of a circle, that blends two intersecting volumes together.

G

greenhouse: The greenhouse (or glasshouse) of a car comprises the windshield, rear and side windows, the pillars separating them (designated A-pillar, B-pillar and so on, starting from the car's front), and the car's roof.

ground plane: The theoretical horizontal plane receding from the picture plane to the horizon line.

H

happy accident: When something unexpectedly good comes from what would otherwise be considered a mishap.

horizon line: A horizontal line across a picture. It's placement defines the viewer's eye level.

J

jounce: To move joltingly or roughly up and down; to bounce.

L

lens distortion: The apparent effect is that of an image which has been mapped around a sphere (or barrel). Fish-eye lenses, which take hemispherical views, utilize this type of distortion as a way to map an infinitely wide object plane into a finite image area.

line of sight: A straight line extending from the fovea centralis of the eye to an object on which the eye is focused.

line weight: The thickness of a drawn line.

linear perspective: A mathematical system for representing three-dimensional objects and space on a two-dimensional surface by means of intersecting lines that are drawn vertically and horizontally and that radiate from one point (one-point perspective), two points (two-point perspective), or several points on a horizon line as perceived by a viewer imagined in an arbitrarily fixed position.

M

minor axis: The line that divides an ellipse in half across its narrow dimension. The minor axis is always perpendicular to the surface on which the ellipse lies.

MODO: 3D modeling and rendering software made by Luxology, http://www.luxology.com

O

occlusion: One surface hiding another surface from view.

orthographic view: A single view of an object onto a drawing surface with no perspective convergence. Also called **draft view.**

overlay: A sheet of transparent paper placed over a photograph or other artwork for making revisions.

P

perspective: A technique of depicting volumes and spatial relationships on a flat surface.

perspective grid: A network of lines drawn to represent the perspective of a systematic network of lines on the ground or on X-Y-Z planes.

picture plane: The plane of a drawing that is in the extreme foreground of a picture, is coextensive with but not the same as the material surface of the work, is the point of visual contact between the viewer and the picture.

point of view (POV): A position from which someone or something is observed.

R

reference point: A mark set at a specific location in a drawing so as to permit accurate perspective drawing.

rocker: Body paneling below the passenger compartment of a vehicle.

S

section lines: Parallel lines that curve over an object's surface in a vertical or horizontal manner (or both) and reveal the item's surface characteristics. Section lines are similar to wire framing used in 3D design.

station point: A stationary point from which a viewer is related to the object/figure being drawn. It may be very high or very low.
High=bird's-eye view. Low = worm's-eye view.

SketchUp: 3D modeling and rendering software,
http://www.sketchup.com

T

thumbnail sketch: A small, quick, concise, descriptive sketch.

tooth: The roughness of a paper's surface.

tumblehome: The convex, inward curvature of the side of a car above the belt line.

U

underlay: An image or drawing, often of a perspective grid, laid underneath a piece of paper to be the foundation for the overlay drawing.

V

vanishing point: that point toward which receding parallel lines appear to converge.

vignette: Lines or values that are drawn with less contrast to give the illusion of depth.

W

wheel base: The distance between the centerpoints of the front and rear wheels.

wheel well: A recess in the body of a vehicle to cover the wheels and tires that must be large enough to accomodate the full range of tire motion on the suspension.

X

X plane: The plane that X sections are drawn upon—usually thought of as the front and rear view of an object.

Y

Y plane: The plane that Y sections are drawn upon—usually thought of as the side views of an object.

Z

Z plane: The plane that Z sections are drawn upon—usually thought of as the top and bottom views of an object.

INDEX

camera lenses 118-119, 141, 167-168, 171, 186-187

cone of vision 23, 24, 27, 48

construction plane 48-52, 98, 134, 149, 146

contour line 70, 100, 102-103

cross sections 40-43, 85-91, 94-99

draw through 15, 16, 86-91, 94-99

ellipse (anatomy) 18-19, 72

ellipse (drawing) 18-19, 73

ground plane 21-27

horizon line 21-27, 62-63, 120-121

line of sight 22-25, 27

line weight 9, 59, 60-61, 64-70, 79, 100-101, 114, 185

minor axis 18, 19, 73, 166-167

orthographic view 30, 82-84

overlay 151, 185

perspective grid 45-63, 85,133,141,180

picture plane 22, 48

section drawing 81-99, 146-151, 182-187

station point 22, 24, 27, 48, 49

thumbnail sketching 83, 112-114, 122, 130-132, 144-145, 158, 164-165, 191-192, 195, 197

vanishing point 24, 49, 54, 62, 76, 108

vignette 101, 112-113

Visual Ray Method 24

working sketch 82-83, 140, 185,

X-Y-Z coordinate system 16, 81

SCOTT ROBERTSON DESIGN: YOU TUBE CHANNEL

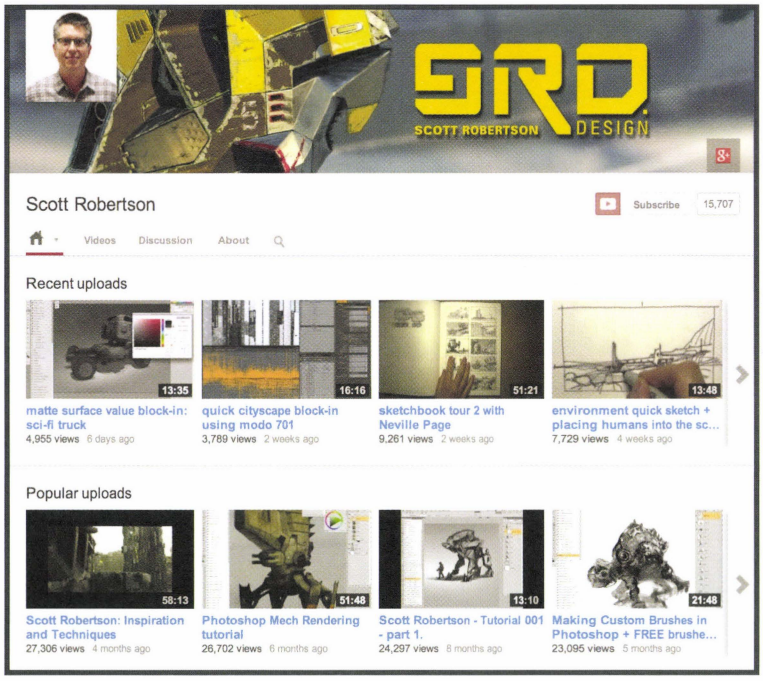

A great FREE educational resource is Scott's YouTube channel, **http://www.youtube.com/user/scottrobertsondesign**

Find plenty of educational tutorials related to drawing, rendering and design. New videos are posted almost every Friday.

SCOTT ROBERTSON ON SCHOOLISM

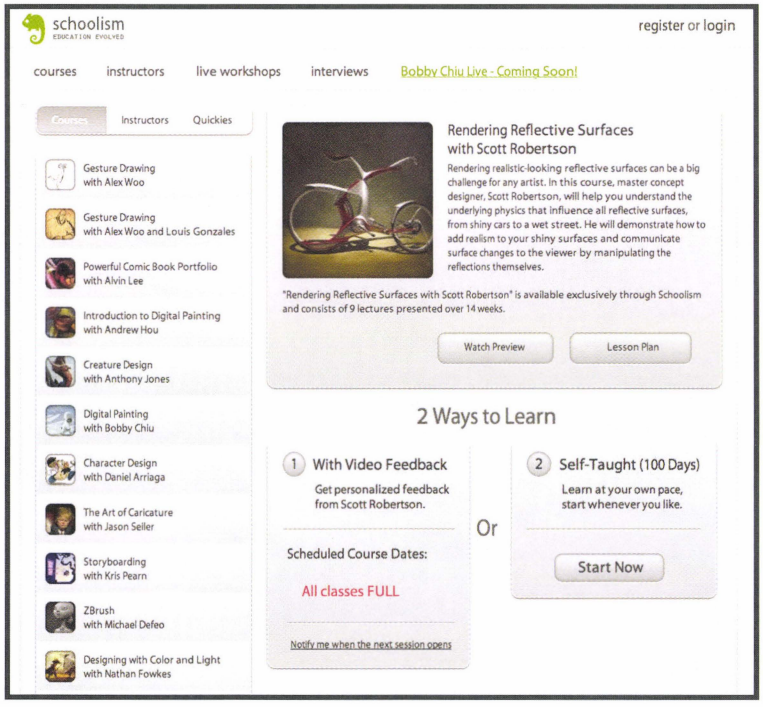

Eager to start rendering reflective surfaces? Awesome! Scott offers a 9-lesson online course through **www.schoolism.com.** There are over 18 hours of recorded lectures and demos on the subject. In addition, layered PSD files, PSD brushes, and reference imagery are all available for download, along with one chapter from his next book, *How to Render.*

SCOTT ROBERTSON WORKSHOPS, USA

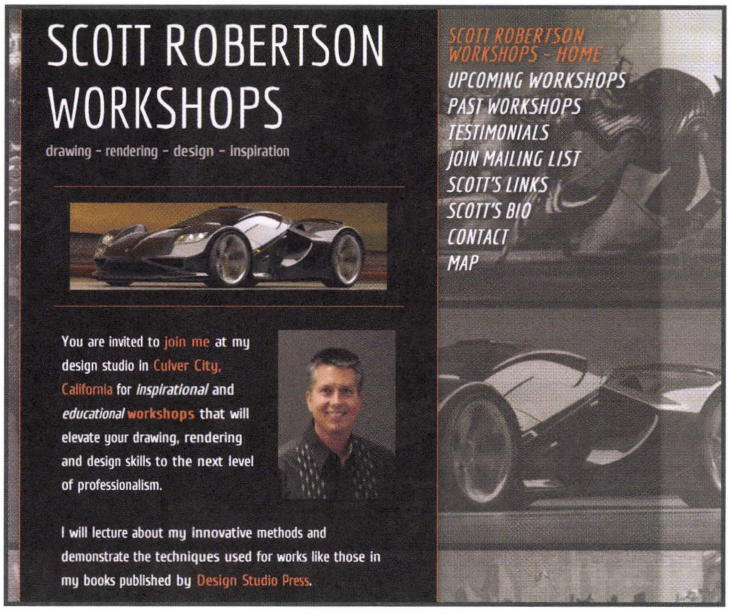

Attend a workshop at Scott's studio in Los Angeles to learn even more and network with other like-minded creative people at his cool studio! Check out the SRW website and join the mailing list at:
www.scottrobertsonworkshops.com

SCOTT ROBERTSON WORKSHOPS, ASIA

If you're in Taiwan or China, watch for this event with Scott and great guest speakers, giving workshops in a variety of locations. The best way to stay in touch and up-to-date is through the SRW-Asia website, **http://srw-asia.com.**

VIDEO LINKS LIST

To view all of the educational videos marked by the play button in this book, just type in the URL listed below or scan the QR Code to the right. Enter the password, **howtodraw**, when prompted.

Be sure to check back from time to time for updates!

http://scottrobertsonworkshops.com/h2dr/linklist

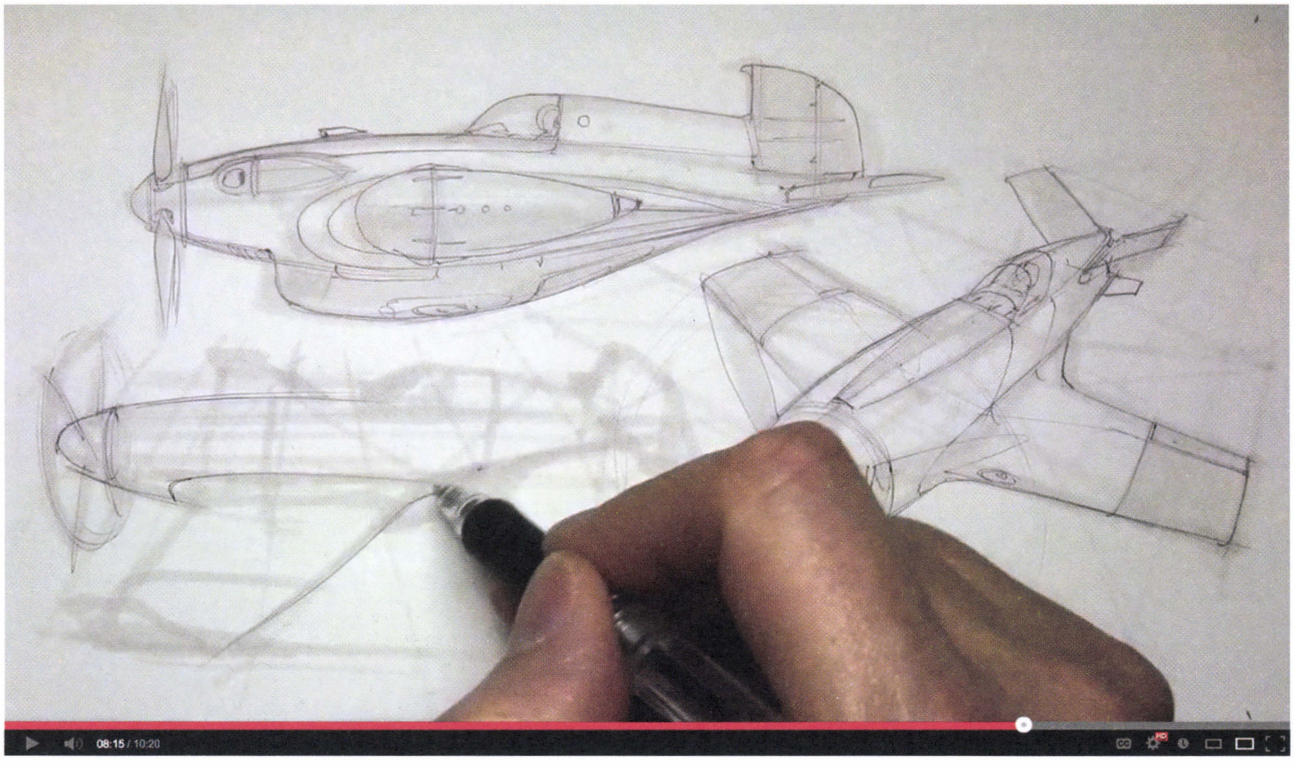

Scott Robertson
Former Chair of Entertainment Design: Art Center College of Design
Designer / Author / Educator / Co-Producer

With over 18 years of experience teaching and creating curriculum on how to design, draw, and render at the highest college level, Scott brings unique and unquestioned expertise to the presentation and communication of the subject of this book. He has authored or co-authored 11 books on design and concept art. In addition to books, he has co-produced over 40 educational DVDs with The Gnomon Workshop of which 9 feature his own lectures. Scott formerly chaired the Entertainment Design department at Art Center College of Design that he helped to create. He frequently lectures around the world for various corporations, colleges, and through his own workshop brand, SRW.

In addition to teaching, Scott has worked on a very wide variety of projects ranging from vehicle and alien designs for the Hot Wheels animated series *Battle Force Five,* to theme park attractions such as the *Men in Black* ride in Orlando, Florida for Universal Studios. Some of his clients have included the BMW subsidiary Design-works/USA, Bell Sports, Giro, Mattel Toys, Spin Master Toys, Patagonia, the feature film *Minority Report,* Nike, Rockstar Games, Sony Online Entertainment, Sony Computer Entertainment of America, Buena Vista Games, THQ, and Fiat to name just a few.

To see more of Scott Robertson's personal and professional work, please visit **www.drawthrough.com** and his blog at **www.drawthrough.blogspot.com**

Scott can also be followed online at:
Facebook: www.facebook.com/scott.robertson.005
Instagram: scoro5
Twitter: @scoro5

contact email: **scott@drawthrough.com**

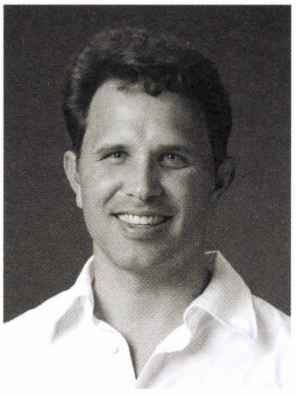

Thomas Bertling
Director of Entertainment Design: Art Center College of Design
Designer / Engineer / Educator

Thomas Bertling has an extensive background as a successful industrial designer and engineer, with a varied array of clients such as Disney, Samsung, and Whole Foods, and a diverse portfolio of completed products on the market, from state-of-the-art medical innovations to combat-ready military vehicles. This hands-on expertise gives him a distinct approach and remarkable edge in addition to being an acclaimed design educator. With substantial experience teaching all levels of perspective sketching and construction to both university students and corporate clients, he has created comprehensive and proven curricula rooted in practicality and real-world application. He currently serves as Director of Entertainment Design at Art Center College of Design as well as teaching several courses and training faculty members.

To see more of Thomas Bertling's personal and professional work, please visit **www.thomasworks.com.**

SPECIAL THANKS

Special thanks to my wife Melissa and the Design Studio Press creative team for all the help and support during the creation of this book, and to my mentors who taught me. Lastly, thanks to you for supporting me through your ongoing interest in my books; you keep me inspired to do more!

—Scott Robertson

Special thanks to my parents, Josef and Sabine, who helped me pursue the crazy dream of becoming a designer; to Scott Robertson for being the teacher who made me a teacher; to all my incredible students who inspire me to keep learning & growing, and to my wife Erika & son Lukas who have always believed in me – thank you for your patience, support, and love.

—Thomas Bertling

ALSO FROM SCOTT ROBERTSON:

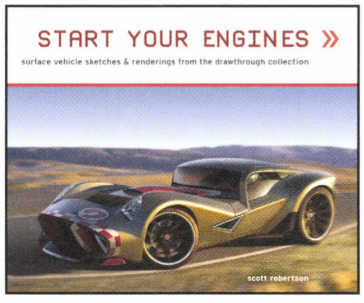

Softcover: 978-1-933492-13-1

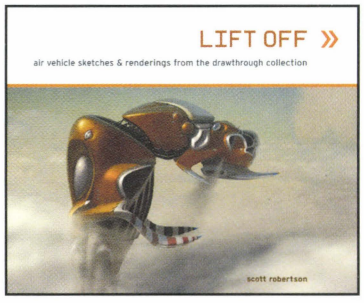

Softcover: 978-1-933492-15-5

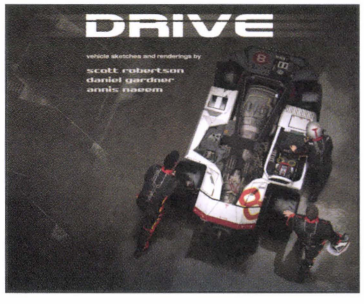

Hardcover: 978-1-933492-86-5
Softcover: 978-1-933492-87-2

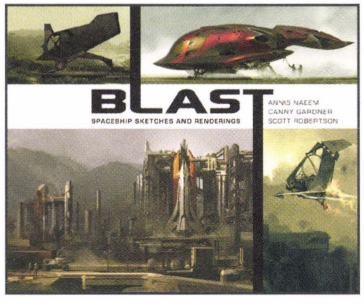

Hardcover: 978-1-933492-62-9
Softcover: 978-1-933492-16-2

WATCH SCOTT'S EDUCATIONAL DVDS ON FOUNDATION DRAWING AND RENDERING AT HTTP://WWW.THEGNOMONWORKSHOP.COM

To order additional copies of this book and to view other books we offer, please visit: **www.designstudiopress.com**

For volume purchases and resale inquiries, please email: **info@designstudiopress.com**

To be notified of new releases, special discounts and events, please sign up for the mailing list on our website, join our Facebook fan page, or follow us on Twitter:

facebook.com/designstudiopress
twitter.com/DStudioPress

Or you can write to:
Design Studio Press
8577 Higuera Street
Culver City, CA 90232
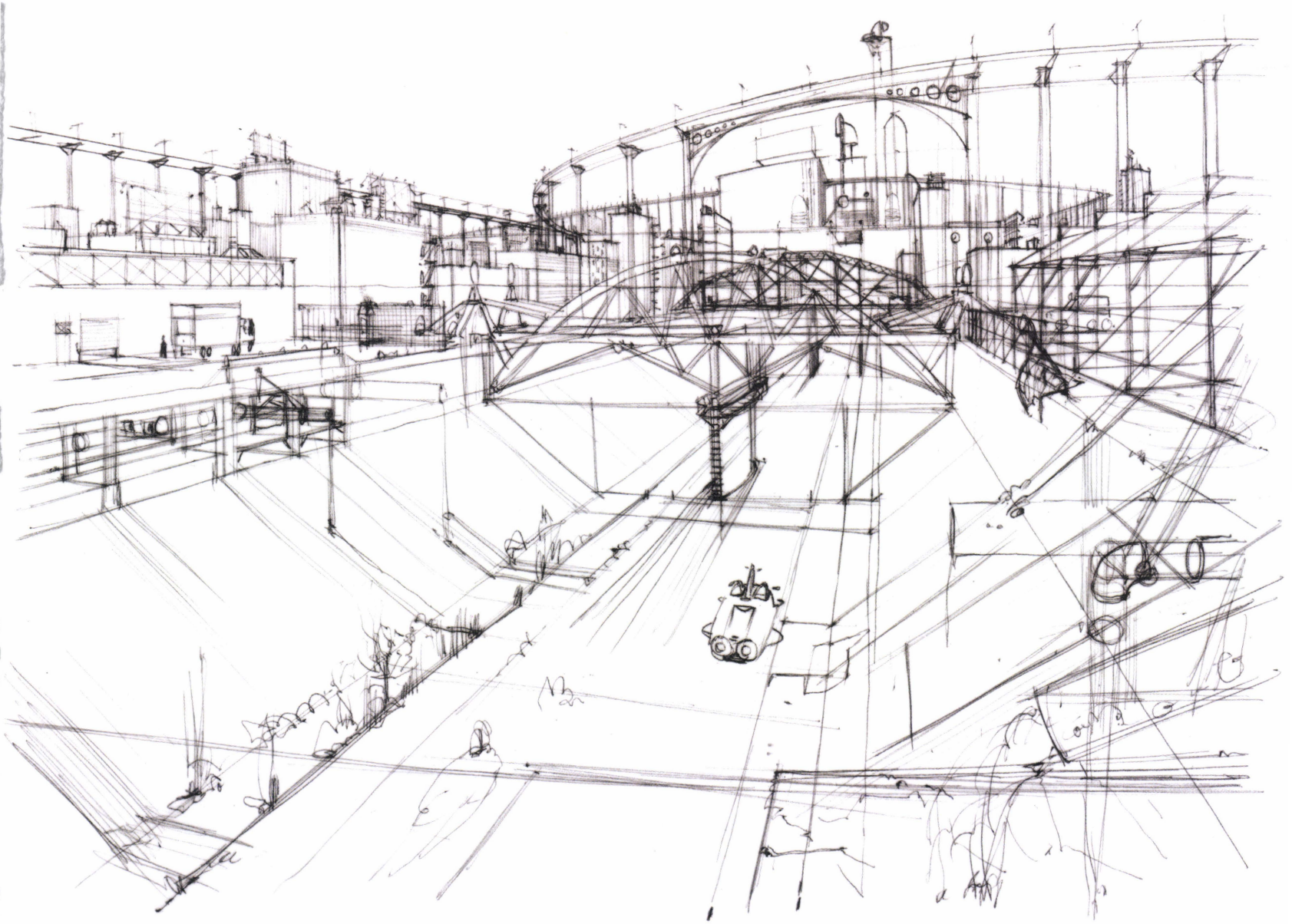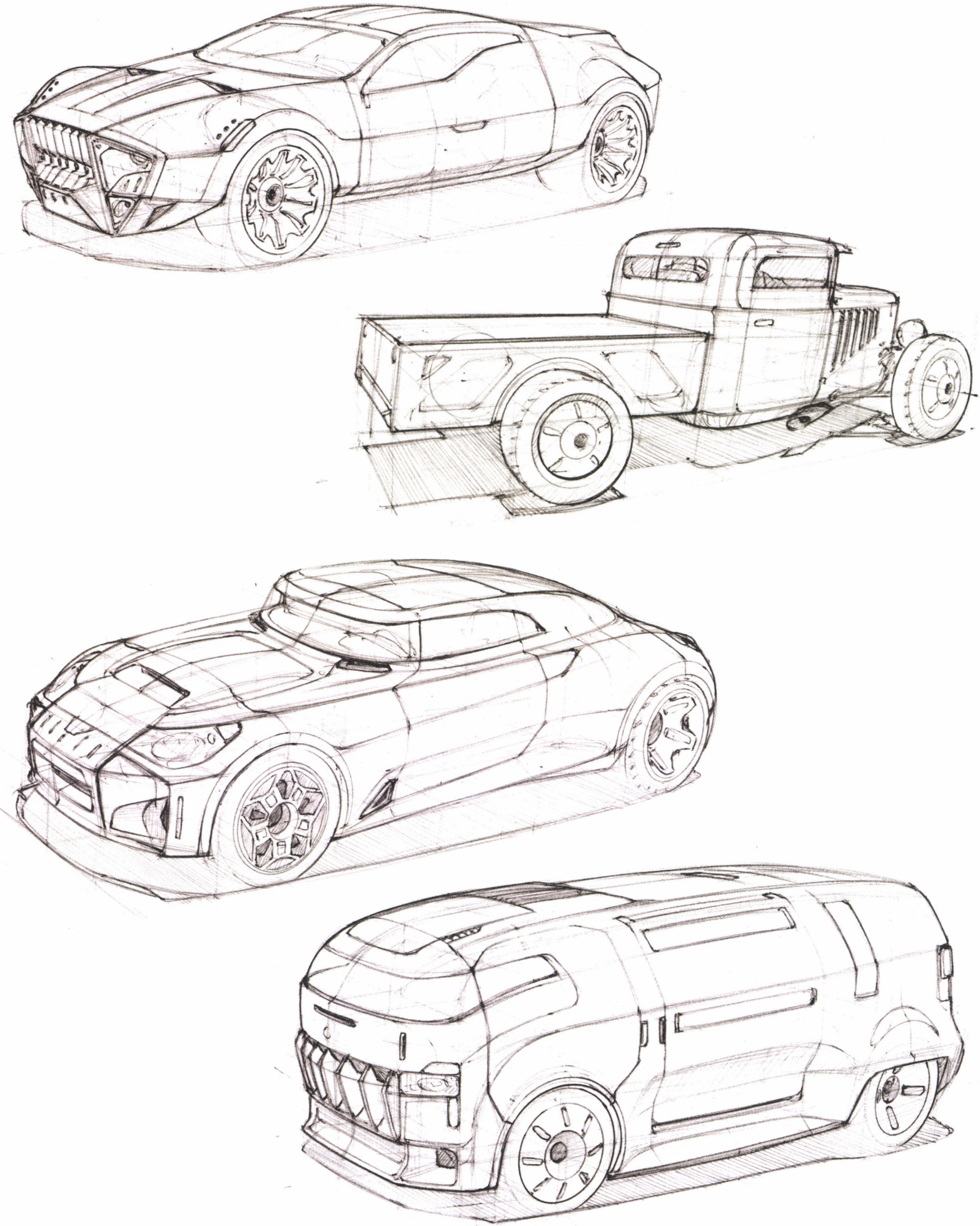
Telephone: **310.836.3116**
Fax: **310.836.1136**